U.S. Department of Homeland Security
United States Coast Guard

Commander
United States Coast Guard
Personnel Service Center

Mail Stop 7200
2703 Martin Luther King Jr. Ave. SE
Washington, DC 20593-7200
Staff Symbol: PSC-cd
Phone: (202) 795-6475
Fax: (202) 795-6473

PSCINST 5350.9A

JAN 30 2017

COAST GUARD PERSONNEL SERVICE CENTER INSTRUCTION 5350.9A

Subj: LEADERSHIP AND DIVERSITY ADVISORY COUNCIL

Ref: (a) Coast Guard Civil Rights Manual, COMDTINST M5350.4C
(b) Commandant's Leadership, Excellence and Diversity Council and Leadership and Diversity Advisory Councils, COMDTINST 5350.9

1. PURPOSE. This instruction describes the organization and operation of the Coast Guard Personnel Service Center's (PSC) Leadership and Diversity Advisory Council (LDAC), sets criteria for representation on the LDAC, and provides guidance for council members.

2. ACTION. All PSC Division Chiefs must ensure their members are aware of, and ensure compliance with the provisions of this instruction. Internet release is authorized.

3. DIRECTIVES AFFECTED. Leadership and Diversity Advisory Council, PSCINST 5350.9, is cancelled.

4. DISCUSSION. One of the most important responsibilities of Commander, PSC is to ensure that all members have a safe working environment that is free of harassment and discrimination. In such an environment PSC members will have the opportunity to be successful and reach their full potential. In this regard, the LDAC is one of the command's principal advisors.

   a. The LDAC is an effective means of enhancing leadership skill sets and fostering a positive workforce climate within the organization. The LDAC shall inform Commander, PSC of leadership, diversity or command climate issues that may surface at the unit. Any PSC member may attend an LDAC meeting, which is an open and honest forum to discuss leadership, diversity, and command climate issues.

   b. In addition to the LDAC's role of advising the command on leadership, diversity, and command climate issues, the LDAC's goal is to promote diversity through training, awareness and education. The LDAC shall:

      (1) Facilitate discussion on leadership, diversity, and command climate issues and policies.

      (2) Enable and encourage communication between the command and PSC personnel regarding leadership, diversity, and command climate issues.

(3) Stimulate participation in Special Emphasis Programs as outlined in Reference (a), within PSC or with National Capital Region (NCR) area commands.

5. DISCLAIMER. This guidance is not a substitute for applicable legal requirements, nor is it itself a rule. It is intended to provide operational guidance for Coast Guard personnel and is not intended to nor does it impose legally-binding requirements on any party outside the Coast Guard.

6. MAJOR CHANGES. None.

7. IMPACT ASSESSMENT. This Instruction creates no new personnel resources, training, or funding requirements.

8. ENVIRONMENTAL ASPECT AND IMPACT CONSIDERATIONS.

   a. The development of this directive and the general policies contained within it have been thoroughly reviewed by the originating office and are categorically excluded under current USCG categorical exclusion (CE) #33 from further environmental analysis, in accordance with Section 2.B.2. and Figure 2-1 of the National Environmental Policy Act Implementing Procedures and Policy for Considering Environmental Impacts, COMDTINST M16475.1 (series).

   b. This directive will not have any of the following: significant cumulative impacts on the human environment; substantial controversy or substantial change to existing environmental conditions; or inconsistencies with any Federal, State, or local laws or administrative determinations relating to the environment. All future specific actions resulting from the general policies in this Manual must be individually evaluated for compliance with the National Environmental Policy Act (NEPA), Council on Environmental Policy NEPA regulations at 40 CFR Parts 1500-1508, DHS and Coast Guard NEPA policy, and compliance with all other environmental mandates.

9. DISTRIBUTION. No paper distribution will be made of this Instruction. An electronic version will be located on the following Commander, CG Personnel Service Center internet site: http://www.uscg.mil/psc/hra/pscinst.asp.

10. PROCEDURE.

   a. All LDAC members will follow specific roles and responsibilities as outlined in enclosure (1).

   b. At a minimum, the LDAC shall include a Chairperson (Chair), Vice-Chairperson (Vice-Chair), Secretary, and representatives from each division. The LDAC will elect a Chair, Vice-Chair, and Secretary from its membership. In case of a tie or lacking a nominee for a position, Deputy Commander, PSC will appoint a member to the position to serve until a new election can be held.

   c. LDAC membership is open to all PSC members and should include both military and civilian personnel. Volunteers will be solicited from each division. To the extent

possible, LDAC membership will be voluntary. However, in the event voluntary membership does not adequately represent all PSC divisions or there is an insufficient number of volunteers, Deputy Commander, PSC may appoint members to serve on the LDAC.

d. All members of the LDAC will serve a minimum of one year in their positions unless otherwise approved by the PSC Deputy Commander.

e. LDAC will conduct meetings as follows:

(1) Quarterly meetings:

(a) The LDAC shall conduct one meeting per quarter beginning in October of each year. The quarterly meetings will typically last no more than one and one-half hours.

(b) LDAC meetings are open to all PSC personnel. Attendance by the Command Master Chief is encouraged.

(2) Special meetings:

(a) In addition to quarterly meetings and at the discretion of the LDAC Chair, special meetings may be held to discuss LDAC events and initiatives.

11. RECORDS MANAGEMENT CONSIDERATIONS. This Instruction has been thoroughly reviewed during the directives clearance process, and it has been determined there are no further records scheduling requirements, in accordance with Federal Records Act, 44 U.S.C. 3101 et seq., NARA requirements, and Information and Life Cycle Management Manual, COMDTINST M5212.12 (series). This policy does not have any significant or substantial change to existing records management requirements.

12. FORMS/REPORTS. None.

13. REQUEST FOR CHANGES. Units and individuals may recommend changes by writing via the chain of command to: Commander, Coast Guard Personnel Service Center; Mail Stop 7200, 2703 Martin Luther King Jr. Ave. SE, Washington, DC 20593-7200.

M. T. BELL, JR.
Commander, Personnel Service Center

Enclosure: (1) LDAC Member Roles and Responsibilities

Leadership and Diversity Advisory Council Organization, Member Roles and Responsibilities

Overview This section describes roles and responsibilities for LDAC officers and members.

Personnel Service Center
LDAC Organizational Structure

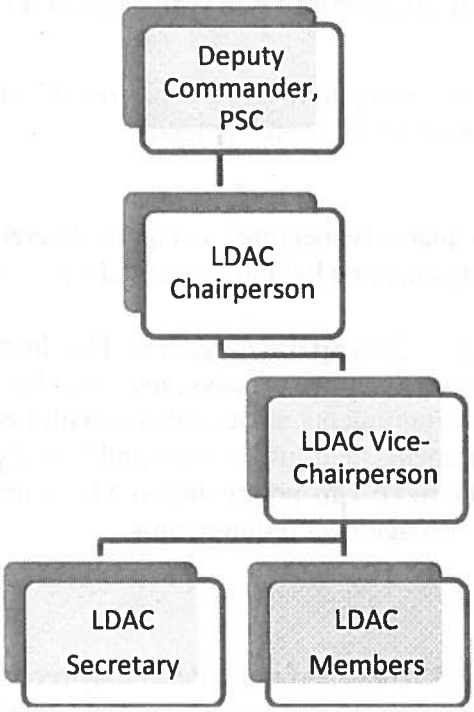

This chart depicts LDAC hierarchy for its management and administration. The LDAC reports to the Deputy Commander, PSC.

Responsibilities

The LDAC's mission is to advise the command on leadership, diversity, and/or command climate issues. The LDAC's goal is to promote diversity through training, awareness, and education. LDAC members are expected to stay abreast of new policy and guidance and will meet at least once per quarter to discuss changes in policy, new initiatives and the overall direction of the LDAC. LDAC members are expected to act as advocates for their respective divisions and actively participate in all meetings, LDAC events, and other initiatives.

LDAC Chairperson

Overview This section discusses the roles and responsibilities of the LDAC Chairperson (Chair). The Chair reports directly to the Deputy Commander, PSC and is responsible for the overall management and direction of the LDAC.

LDAC Chairperson Responsibilities

a. Research and coordinate external diversity outreach opportunities (e.g. National Capital Region Special Emphasis Programs).

b. Review, sign, and forward the minutes (or any other LDAC correspondence) to Deputy Commander, PSC.

c. Meet with the Deputy Commander as needed to discuss LDAC initiatives, new policy and the direction of the LDAC.

d. Preside over all meetings.

e. Administer the Defense Equal Opportunity Management Institute's (DEOMI) Organizational Climate Survey (DEOCS). Review results and develop recommendations to improve any areas of concern.

Authority

The LDAC Chair will exercise only those powers that are required in the performance of duties and the discharge of responsibilities delegated to him/her by the Deputy Commander, PSC.

LDAC Vice-Chairperson

Overview This section discusses the roles and responsibilities of the LDAC Vice Chairperson (Vice-Chair). The Vice-Chair is second in charge of the LDAC and will assume all duties as delegated.

LDAC Vice-Chair Responsibilities

a. Oversee the management and functions of the LDAC. All LDAC committees will report to the LDAC Vice-Chair for the following:

- Membership
- Website/Advertising
- Special Emphasis Events

b. Provide status updates to the LDAC Chair regarding all committee actions.

c. Review all LDAC promulgated documents prior to routing to the Chair for the command's review and/or approval.

d. Facilitate LDAC meetings to ensure meetings are on schedule and in accordance with the agenda.

e. Schedule LDAC meetings and prepare an agenda for all LDAC meetings. In addition, the Vice-Chair will keep track of all unfinished business.

Authority

The LDAC Vice-Chair will exercise only those powers that are required in the performance of duties and the discharge of responsibilities delegated to him/her by the Deputy Commander, PSC or the LDAC Chair. The Vice-Chair will preside over LDAC meetings when the Chair is absent. In case of a vacancy of the Chair, the Vice-Chair will assume the office of Chair for the remainder of the term. The Vice-Chair will assume the role of any position in case of vacancy.

LDAC Secretary

Overview This section discusses roles and responsibilities of the LDAC Secretary. The Secretary is responsible for ensuring the LDAC administrative needs are in order.

LDAC Secretary Responsibilities

a. Prepare agendas and record all proceedings of the LDAC. The Secretary will prepare minutes of the LDAC meetings for review by the Chair and Deputy Commander, PSC.

- As delegated by the Chair or Vice-Chair, the Secretary will draft and distribute emails to all hands regarding LDAC events.
- Prior to each LDAC meeting, the Secretary will send out, via email, a meeting agenda with the meeting time and location.

b. Plan and coordinate all logistics and set up for LDAC meetings.

c. Manage and update all records and correspondence that the LDAC creates. This includes but is not limited to the following:

- Membership log.
- Meeting minutes. The Secretary shall retain these minutes on file, with the Command's endorsement and comments, if any.
- LDAC Instruction, memos, emails and other documents originating from the LDAC. A copy shall be kept in the LDAC electronic folder and the original in a stored file.
- LDAC Calendar
- LDAC electronic folder

Authority

The LDAC Secretary will exercise only those powers that are required in the performance of duties and the discharge of responsibilities delegated to him/her by the Deputy Commander, PSC or the LDAC Chair or Vice-Chair. In case of a vacancy in the office of Vice-Chair, the Secretary will assume the office of Vice-Chair for the remainder of the term.

LDAC Member

Overview This section covers the roles and responsibilities of LDAC members and committees.

LDAC Member Responsibilities

a. All LDAC members will commit to the following:

- Serve as their division's LDAC representative and direct leadership, diversity, or command climate concerns from their division to the LDAC.
- Be active in all meeting discussions, emphasizing timely, open and honest communication.
- Be knowledgeable of available leadership and diversity resources.
- Participate in LDAC staff elections. Only members in good standing will be allowed to vote in elections.
- Participate in quarterly, special, and committee meetings as well as LDAC sponsored events.
- Assist with LDAC events and activities.
- Notify the Chair or Vice-Chair of planned absences from LDAC meetings or event.
- Notify the Chair when attending an external conference/meeting on issues that might be of interest to the LDAC.
- If LDAC committees are formed, all members will actively serve on a committee of interest and contribute to its success.

b. Committees, if any, will have a lead member who is responsible for reporting to the Vice-Chair. Each committee lead will provide adequate time for planning events and meeting timelines.

c. LDAC members are considered to be in good standing when attending all quarterly, special, and committee meetings and events, unless otherwise excused.