INTERNATIONAL MARITIME ORGANIZATION

SUB-COMMITTEE ON SHIP DESIGN AND EQUIPMENT
57th session
Agenda item 25

DE 57/25/Add.1
22 April 2013
Original: ENGLISH

REPORT TO THE MARITIME SAFETY COMMITTEE AND THE MARINE ENVIRONMENT PROTECTION COMMITTEE

Attached are the annexes to the report of the Sub-Committee on Ship Design and Equipment on its fifty-seventh session (DE 57/25).

SUSTAINABLE DEVELOPMENT:
IMO'S CONTRIBUTION BEYOND RIO+20

LIST OF ANNEXES

ANNEX 1 DRAFT MSC CIRCULAR ON UNIFIED INTERPRETATIONS OF SOLAS CHAPTERS II-1 AND XII, OF THE TECHNICAL PROVISIONS FOR MEANS OF ACCESS FOR INSPECTIONS (RESOLUTION MSC.158(78)) AND OF THE PERFORMANCE STANDARDS FOR WATER LEVEL DETECTORS ON BULK CARRIERS (RESOLUTION MSC.145(77))

ANNEX 2 DRAFT MSC CIRCULAR ON UNIFIED INTERPRETATIONS OF THE PERFORMANCE STANDARD FOR PROTECTIVE COATINGS FOR DEDICATED SEAWATER BALLAST TANKS IN ALL TYPES OF SHIPS AND DOUBLE-SIDE SKIN SPACES OF BULK CARRIERS (RESOLUTION MSC.215(82))

ANNEX 3 DRAFT MEPC CIRCULAR ON AMENDMENTS TO THE UNIFIED INTERPRETATION TO REGULATION 12.2 OF MARPOL ANNEX I

ANNEX 4 DRAFT MSC CIRCULAR ON UNIFIED INTERPRETATIONS ON FALL PREVENTER DEVICES (MSC.1/CIRC.1392 AND MSC.1/CIRC.1327)

ANNEX 5 DRAFT MSC CIRCULAR ON UNIFIED INTERPRETATIONS OF SOLAS REGULATION II-1/26.3

ANNEX 6 DRAFT MSC CIRCULAR ON UNIFIED INTERPRETATIONS OF PARAGRAPH 1.1.4 OF THE LSA CODE

ANNEX 7 DRAFT MSC RESOLUTION ON ADOPTION OF THE REQUIREMENTS FOR PERIODIC SERVICING AND MAINTENANCE OF LIFEBOATS AND RESCUE BOATS, LAUNCHING APPLIANCES AND RELEASE GEAR

ANNEX 8 DRAFT MSC CIRCULAR ON GUIDELINES ON SAFETY DURING ABANDON SHIP DRILLS USING LIFEBOATS

ANNEX 9 DRAFT AMENDMENTS TO SOLAS CHAPTER III

ANNEX 10 JUSTIFICATION FOR A NEW OUTPUT ON "GUIDELINES ADDRESSING THE CARRIAGE OF MORE THAN 12 INDUSTRIAL PERSONNEL ON BOARD VESSELS ENGAGED ON INTERNATIONAL VOYAGES"

ANNEX 11 DRAFT AMENDMENTS TO THE LSA CODE

ANNEX 12 DRAFT AMENDMENTS TO THE REVISED RECOMMENDATION ON TESTING OF LIFE-SAVING APPLIANCES (RESOLUTION MSC.81(70))

ANNEX 13 DRAFT MSC CIRCULAR ON GUIDELINES FOR VALIDATING THE CONSTRUCTION OF A COMPLETED ADULT LIFEJACKET REFERENCE TEST DEVICE (RTD)

ANNEX 14 DRAFT MEPC CIRCULAR ON GUIDELINES FOR THE REDUCTION OF UNDERWATER NOISE FROM COMMERCIAL SHIPPING

ANNEX 15 DRAFT AMENDMENTS TO SOLAS REGULATION II-1/29

ANNEX 16 PROPOSED BIENNIAL AGENDA OF THE SUB-COMMITTEE FOR THE 2014-2015 BIENNIUM AND ITEMS ON THE POST-BIENNIAL AGENDA OF THE COMMITTEE UNDER THE PURVIEW OF THE SUB-COMMITTEE

ANNEX 17 PROVISIONAL AGENDA FOR DE 58

ANNEX 18 REPORT ON THE STATUS OF PLANNED OUTPUTS OF THE HIGH-LEVEL ACTION PLAN OF THE ORGANIZATION AND PRIORITIES FOR THE 2012-2013 BIENNIUM RELEVANT TO THE SUB-COMMITTEE

ANNEX 19 DRAFT AMENDMENTS TO THE 2011 ESP CODE

***

ANNEX 1

DRAFT MSC CIRCULAR

UNIFIED INTERPRETATIONS OF SOLAS CHAPTERS II-1 AND XII, OF THE TECHNICAL PROVISIONS FOR MEANS OF ACCESS FOR INSPECTIONS (RESOLUTION MSC.158(78)) AND OF THE PERFORMANCE STANDARDS FOR WATER LEVEL DETECTORS ON BULK CARRIERS (RESOLUTION MSC.145(77))

1 The Maritime Safety Committee, [at its ninety-second session (…)], approved unified interpretations of the provisions of SOLAS chapters II-1 and XII, the Technical provisions for means of access for inspections (resolution MSC.158(78)) and of the Performance standards for water level detectors on bulk carriers (resolution MSC.145(77)), as set out in the annex, following the recommendations made by the Sub-Committee on Ship Design and Equipment at its fifty-seventh session, with a view to ensuring a uniform approach towards the application of the provisions of SOLAS chapters II-1 and XII.

2 Member Governments are invited to use the annexed interpretations when applying relevant provisions of SOLAS chapters II-1 and XII, and to bring them to the attention of all parties concerned.

3 This circular supersedes circulars MSC.1/Circ.1176 and MSC.1/Circ.1197.

ANNEX

UNIFIED INTERPRETATIONS OF SOLAS CHAPTERS II-1 AND XII, OF THE TECHNICAL PROVISIONS FOR MEANS OF ACCESS FOR INSPECTIONS (RESOLUTION MSC.158(78)) AND OF THE PERFORMANCE STANDARDS FOR WATER LEVEL DETECTORS ON BULK CARRIERS (RESOLUTION MSC.145(77))

Table of contents

1 SOLAS regulation II-1/3-6 – Access to and within spaces in the cargo area of oil tankers and bulk carriers

2 Technical provisions for means of access for inspections (resolution MSC.158(78))

3 SOLAS regulation II-1/26 – General

4 SOLAS regulations II-1/40 – General – and II-1/41 – Main source of electrical power and lighting systems

5 SOLAS regulation II-1/41 – Main source of electrical power and lighting systems

6 SOLAS regulations II-1/42 and II-1/43 – Emergency source of electrical power in passenger and cargo ships

7 SOLAS regulation II-1/44 – Starting arrangements for emergency generating sets

8 SOLAS chapter II-1, parts B – Subdivision and stability – and B1 – Subdivision and damage stability of cargo ships

9 SOLAS regulation XII/9 – Requirements for bulk carriers not being capable of complying with regulation 4.3 due to the design configuration of their cargo holds

10 SOLAS regulation XII/12 – Hold, ballast and dry space water ingress alarms, including the *Performance standards for water level detectors on bulk carriers* (resolution MSC.145(77))

11 SOLAS regulation XII/13 – Availability of pumping systems

1 SOLAS REGULATION II-1/3-6 – ACCESS TO AND WITHIN SPACES IN THE CARGO AREA OF OIL TANKERS AND BULK CARRIERS

1.1 SOLAS REGULATION II-1/3-6, SECTION 1

Interpretation

Oil tankers

This regulation is only applicable to oil tankers having integral tanks for carriage of oil in bulk, which is contained in the definition of oil in Annex I of MARPOL. Independent oil tanks can be excluded. Regulation II-1/3-6 should not normally be applied to FPSO or FSO unless the Administration decides otherwise.

Technical background

Means of Access (MA) specified in the Technical provisions contained in resolution MSC.158(78) are not specific with respect to the application to integral cargo oil tanks or also to independent cargo oil tanks. ESP requirements of oil tankers have been established assuming the target cargo oil tanks are integral tanks. The MA regulated under SOLAS regulation II-1/3-6 is for overall and close-up inspections as defined in regulation IX/1. Therefore it is assumed that the target cargo oil tanks are those of ESP, i.e. integral cargo tanks. Regulation II-1/3-6 is applicable to new, purpose-built FPSO or FSU if they are subject to the scope of the ESP Code (resolution A.1049(27), as amended). Considering that the principles of the *Technical provisions for means of access for inspections* (resolution MSC.158(78)) recognize that permanent means of access should be considered and provided for at the design stage so that, to the maximum extent possible, they can be made an integral part of the designed structural arrangement, regulation II-1/3-6 is not considered applicable to an FPSO/FSU that is converted from an existing tanker.

Reference

SOLAS regulation IX/1 and resolution A.744(18), as amended.

1.2 SOLAS REGULATION II-1/3-6, PARAGRAPH 2.1

Interpretation

Each space for which close-up inspection is not required such as fuel oil tanks and void spaces forward of cargo area, may be provided with a means of access necessary for overall survey intended to report on the overall conditions of the hull structure.

1.3 SOLAS REGULATION II-1/3-6, PARAGRAPH 2.2

Interpretation

Some possible alternative means of access are listed under paragraph 3.9 of the Technical provisions for means of access for inspections (TP). Always subject to acceptance as equivalent by the Administration, alternative means such as an unmanned robot arm, ROVs and dirigibles with necessary equipment of the permanent means of access for overall and close-up inspections and thickness measurements of the deck head structure such as deck transverses and deck longitudinals of cargo oil tanks and ballast tanks, should be capable of:

.1 safe operation in ullage space in gas-free environment; and

.2 introduction into the place directly from a deck access.

Technical background

Innovative approaches, in particular a development of robots in place of elevated passageways, are encouraged and it is considered worthwhile to provide the functional requirement for the innovative approach.

1.4 SOLAS REGULATION II-1/3-6, PARAGRAPH 2.3

Interpretation

Inspection

The MA arrangements, including portable equipment and attachments, should be periodically inspected by the crew or competent inspectors as and when it is going to be used to confirm that the MAs remain in serviceable condition.

Procedures

1 Any Company authorized person using the MA should assume the role of inspector and check for obvious damage prior to using the access arrangements. Whilst using the MA, the inspector should verify the condition of the sections used by close-up examination of those sections and note any deterioration in the provisions. Should any damage or deterioration be found, the effect of such deterioration should be assessed as to whether the damage or deterioration affects the safety for continued use of the access. Deterioration found that is considered to affect safe use should be determined as "substantial damage" and measures should be put in place to ensure that the affected section(s) are not to be further used prior to effective repair.

2 Statutory survey of any space that contains MA should include verification of the continued effectiveness of the MA in that space. Survey of the MA should not be expected to exceed the scope and extent of the survey being undertaken. If the MA is found deficient the scope of survey should be extended if this is considered appropriate.

3 Records of all inspections should be established based on the requirements detailed in the ship's Safety Management System. The records should be readily available to persons using the MAs and a copy attached to the MA Manual. The latest record for the portion of the MA inspected should include as a minimum the date of the inspection, the name and title of the inspector, a confirmation signature, the sections of MA inspected, verification of continued serviceable condition or details of any deterioration or substantial damage found. A file of permits issued should be maintained for verification.

Technical background

It is recognized that MA may be subject to deterioration in the long term due to corrosive environment and external forces from ship motions and sloshing of liquid contained in the tank. MA therefore should be inspected at every opportunity of tank/space entry. The above interpretation should be contained in a section of the MA Manual.

1.5 SOLAS REGULATION II-1/3-6, PARAGRAPH 3.1

Interpretation

Access to a double-side skin space of bulk carriers may be either from a topside tank or double-bottom tank or from both.

Technical background

Unless used for other purposes, the double-side skin space should be designed as a part of a large U-shaped ballast tank and such space should be accessed through the adjacent part of the tank, i.e. topside tank or double-bottom/bilge hopper tank. Access to the double-side skin space from the adjacent part rather than direct from the open deck is justified. Any such arrangement should provide a directly routed, logical and safe access that facilitates easy evacuation of the space.

1.6 SOLAS REGULATION II-1/3-6, PARAGRAPH 3.2

Interpretation

1 A cargo oil tank of less than 35 m length without a swash bulkhead requires only one access hatch.

2 Where rafting is indicated in the ship structures access manual as the means to gain ready access to the under-deck structure, the term "*similar obstructions*" referred to in the regulation includes internal structures (e.g. webs >1.5 m deep) which restrict the ability to raft (at the maximum water level needed for rafting of under-deck structure) directly to the nearest access ladder and hatchway to deck. When rafts or boats alone, as an alternative means of access, are allowed under the conditions specified in the ESP Code (resolution A.1049(27)), permanent means of access are to be provided to allow safe entry and exit. This means:

.1 access direct from the deck via a vertical ladder and small platform fitted approximately 2 m below the deck in each bay; or

.2 access to the deck from a longitudinal permanent platform having ladders to the deck in each end of the tank. The platform should, for the full length of the tank, be arranged in level with, or above, the maximum water level needed for rafting of the under-deck structure. For this purpose, the ullage corresponding to the maximum water level is to be assumed not more than 3 m from the deck plate measured at the midspan of deck transverses and in the middle length of the tank (see figure below). A permanent means of access from the longitudinal permanent platform to the water level indicated above should be fitted in each bay (e.g. permanent rungs on one of the deck webs inboard of the longitudinal permanent platform).

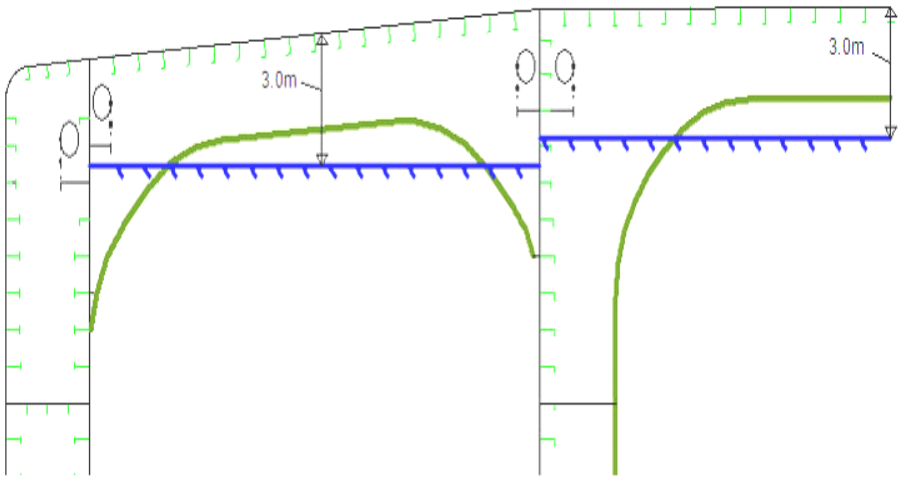

1.7 SOLAS REGULATION II-1/3-6, PARAGRAPH 4.1

Interpretation

1 The access manual should address spaces listed in paragraph 3 of regulation II-1/3-6. As a minimum the English version should be provided. The ship structure access manual should contain at least the following two parts:

Part 1: Plans, instructions and inventory required by paragraphs 4.1.1 to 4.1.7 of regulation II-1/3-6. This part should be approved by the Administration or the organization recognized by the Administration.

Part 2: Form of record of inspections and maintenance, and change of inventory of portable equipment due to additions or replacement after construction. This part should be approved for its form only at new building.

2 The following matters should be addressed in the ship structure access manual:

.1 the access manual should clearly cover scope as specified in the regulations for use by crews, surveyors and port State control officers;

.2 approval/re-approval procedure for the manual, i.e. any changes of the permanent, portable, movable or alternative means of access within the scope of the regulation and the Technical provisions are subject to review and approval by the Administration or by the organization recognized by the Administration;

.3 verification of MA should be part of the safety construction survey for continued effectiveness of the MA in that space which is subject to the statutory survey;

.4 inspection of MA by the crew and/or a competent inspector of the company as a part of regular inspection and maintenance (see interpretation of paragraph 2.3 of SOLAS regulation II-1/3-6);

.5 actions to be taken if MA is found unsafe to use; and

.6 in case of use of portable equipment plans showing the means of access within each space indicating from where and how each area in the space can be inspected.

1.8 SOLAS REGULATION II-1/3-6, PARAGRAPH 4.2

Interpretation

1 Critical structural areas should be identified by advanced calculation techniques for structural strength and fatigue performance, if available, and feedback from the service history and design development of similar or sister ships.

2 Reference should be made to the following publications for critical structural areas, where applicable:

.1 Oil tankers: Guidance Manual for Tanker Structures by TSCF;

.2 Bulk carriers: Bulk Carriers Guidelines for Surveys, Assessment and Repair of Hull Structure by IACS; and

.3 Oil tankers and bulk carriers: ESP Code (resolution A.1049(27)), as amended.

Technical background

These documents contain the relevant information for the present ship types. However, identification of critical areas for new double-hull tankers and double-side skin bulk carriers of improved structural design should be made by structural analysis at the design stage, this information should be taken into account to ensure appropriate access to all identified critical areas.

1.9 SOLAS REGULATION II-1/3-6, PARAGRAPH 5.1

Interpretation

The minimum clear opening of 600 mm x 600 mm may have corner radii up to 100 mm maximum. The clear opening is specified in MSC/Circ.686 to keep the opening fit for passage of personnel wearing a breathing apparatus. In such a case where as a consequence of structural analysis of a given design the stress should be reduced around the opening, it is considered appropriate to take measures to reduce the stress such as making the opening larger with increased radii, e.g. 600 x 800 with 300 mm radii, in which a clear opening of 600 x 600 mm with corner radii up to 100 mm maximum fits.

Technical background

The interpretation is based upon the established Guidelines in MSC/Circ.686.

Reference

Paragraph 9 of the annex to MSC/Circ.686.

1.10 SOLAS REGULATION II-1/3-6, PARAGRAPH 5.2

Interpretation

1 The minimum clear opening of not less than 600 mm x 800 mm may also include an opening with corner radii of 300 mm. An opening of 600 mm in height x 800 mm in width may be accepted as access openings in vertical structures where it is not desirable to make large openings in the structural strength aspects, i.e. girders and floors in double-bottom tanks.

2 Subject to verification of easy evacuation of an injured person on a stretcher the vertical opening 850 mm x 620 mm with wider upper half than 600 mm, while the lower half may be less than 600 mm with the overall height not less than 850 mm is considered an acceptable alternative to the traditional opening of 600 mm x 800 mm with corner radii of 300 mm.

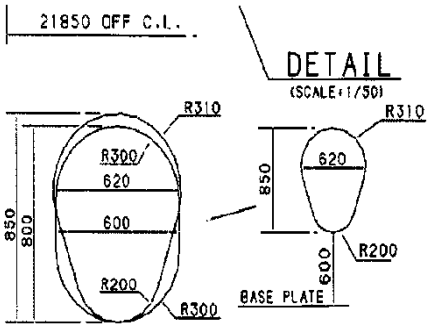

3 If a vertical opening is at a height of more than 600 mm steps then handgrips should be provided. In such arrangements it should be demonstrated that an injured person can be easily evacuated.

Technical background

The interpretation is based upon the established Guidelines in MSC/Circ.686 and an innovative design is considered for easy access by humans through the opening.

Reference

Paragraph 11 of the annex to MSC/Circ.686.

2 TECHNICAL PROVISIONS FOR MEANS OF ACCESS FOR INSPECTIONS (RESOLUTION MSC.158(78))

2.1 PARAGRAPH 1.3

Interpretation

A "combined chemical/oil tanker complying with the provisions of the IBC Code" is a tanker that holds both a valid IOPP certificate as a tanker and a valid certificate of fitness for the carriage of dangerous chemicals in bulk, i.e. a tanker that is certified to carry both oil cargoes under MARPOL Annex I and Chemical cargoes in chapter 17 of the IBC Code either as full or part cargoes. The Technical provisions should be applied to ballast tanks of combined chemical/oil tankers complying with the provisions of the IBC Code.

2.2 PARAGRAPH 1.4

Interpretation

1 In the context of the above requirement, the deviation should be applied only to distances between integrated PMA that are the subject of paragraph 2.1.2 of table 1.

2 Deviations should not be applied to the distances governing the installation of under-deck longitudinal walkways and dimensions that determine whether permanent access is required or not, such as height of the spaces and height to elements of the structure (e.g. cross-ties).

2.3 PARAGRAPH 3.1

Interpretation

The permanent means of access to a space can be credited for the permanent means of access for inspection.

Technical background

The Technical provisions specify means of access to a space and to hull structure for carrying out overall and close-up surveys and inspections. Requirements of MA to hull structure may not always be suitable for access to a space. However, if the MA for access to a space can also be used for the intended surveys and inspections such MA can be credited for the MA for use for surveys and inspections.

2.4 PARAGRAPH 3.3

Interpretation

1 Sloping structures are structures that are sloped by 5 or more degrees from horizontal plane when a ship is in an upright position at even-keel.

2 Guard rails should be fitted on the open side and should be at least 1,000 mm in height. For stand-alone passageways guard rails should be fitted on both sides of these structures. Guardrail stanchions are to be attached to the PMA. The distance between the passageway and the intermediate bar and the distance between the intermediate bar and the top rail should not be more than 500 mm.

3 Discontinuous top handrails are allowed, provided the gap does not exceed 50 mm. The same maximum gap is to be considered between the top handrail and other structural members (i.e. bulkhead, web frame, etc.). The maximum distance between the adjacent stanchions across the handrail gaps is to be 350 mm where the top and mid handrails are not connected together and 550 mm when they are connected together. The maximum distance between the stanchion and other structural members is not to exceed 200 mm where the top and mid handrails are not connected together and 300 mm when they are connected together. When the top and mid handrails are connected by a bent rail, the outside radius of the bent part is not to exceed 100 mm (see figure below).

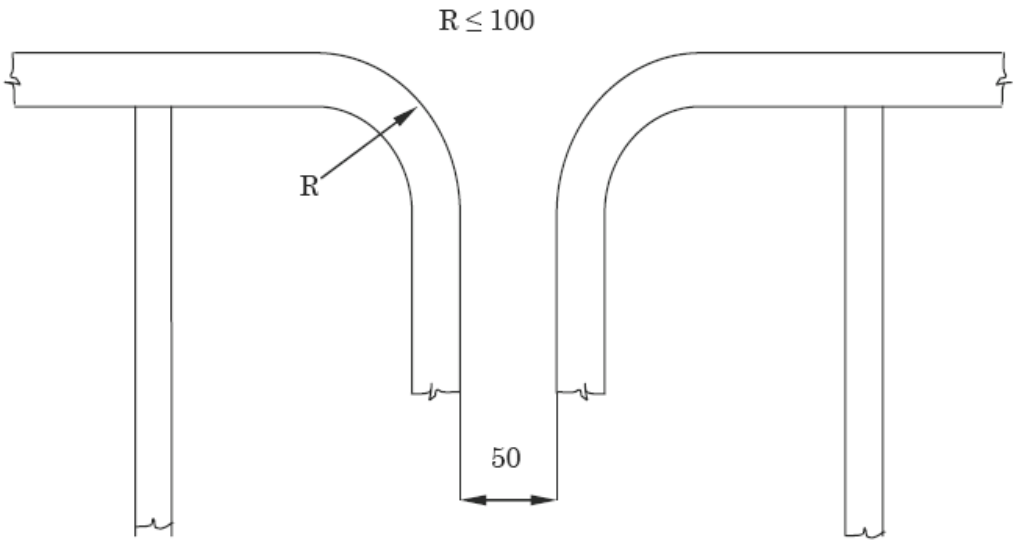

4 Non-skid construction is such that the surface on which personnel walks provides sufficient friction to the sole of boots even if the surface is wet and covered with thin sediment.

5 "Substantial construction" is taken to refer to the as designed strength as well as the residual strength during the service life of the vessel. Durability of passageways together with guard rails should be ensured by the initial corrosion protection and inspection and maintenance during services.

6 For guard rails, use of alternative materials such as GRP should be subject to compatibility with the liquid carried in the tank. Non-fire resistant materials should not be used for means of access to a space with a view to securing an escape route at a high temperature.

7 Requirements for resting platforms placed between ladders should be equivalent to those applicable to elevated passageways.

Reference

Paragraph 10 of the annex to MSC/Circ.686.

2.5 PARAGRAPH 3.4

Interpretation

Where the vertical manhole is at a height of more than 600 mm above the walking level, it should be demonstrated that an injured person can be easily evacuated.

2.6 PARAGRAPH 3.5

Interpretation

MA for access to ballast tanks, cargo tanks and spaces other than fore peak tanks:

For oil tankers:

1 Tanks and subdivisions of tanks having a length of 35 m or more with two access hatchways:

First access hatchway: Inclined ladder or ladders should be used.

Second access hatchway:

.1 A vertical ladder may be used. In such a case where the vertical distance is more than 6 m, vertical ladders should comprise one or more ladder-linking platforms spaced not more than 6 m apart vertically and displaced to one side of the ladder.

The uppermost section of the vertical ladder, measured clear of the overhead obstructions in the way of the tank entrance, should not be less than 2.5 m but not exceed 3.0 m and should comprise a ladder-linking platform which should be displaced to one side of a vertical ladder. However, the vertical distance of the uppermost section of the vertical ladder may be reduced to 1.6 m, measured clear of the overhead obstructions in the way of the tank entrance, if the ladder lands on a longitudinal or athwartship permanent means of access fitted within that range; or

.2 Where an inclined ladder or combination of ladders is used for access to the space, the uppermost section of the ladder, measured clear of the overhead obstructions in the way of the tank entrance, should be vertical for not less than 2.5 m but not exceed 3.0 m and should comprise a landing platform continuing with an inclined ladder. However, the vertical distance of the uppermost section of the vertical ladder may be reduced to 1.6 m, measured clear of the overhead obstructions in the way of the tank entrance, if the ladder lands on a longitudinal or athwartship permanent means of access fitted within that range. The flights of the inclined ladders are normally to be not more than 6 m in vertical height. The lowermost section of the ladders may be vertical for the vertical distance not exceeding 2.5 m.

2 Tanks less than 35 m in length and served by one access hatchway: an inclined ladder or combination of ladders should be used to the space as specified in 1.2 above.

3 In spaces of less than 2.5 m in width the access to the space may be by means of vertical ladders that comprise one or more ladder-linking platforms spaced not more than 6 m apart vertically and displaced to one side of the ladder. The uppermost section of the vertical ladder, measured clear of the overhead obstructions in the way of the tank entrance, should not be less than 2.5 m but not exceed 3.0 m and should comprise a ladder-linking platform which should be displaced to one side of a vertical ladder. However, the vertical distance of the uppermost section of the vertical ladder may be reduced to 1.6 m, measured clear of the overhead obstructions in the way of the tank entrance, if the ladder lands on a longitudinal or athwartship permanent means of access

fitted within that range. Adjacent sections of the ladder should be laterally offset from each other by at least the width of the ladder (see paragraph 20 of MSC/Circ.686).

4 Access from the deck to a double-bottom space may be by means of vertical ladders through a trunk. The vertical distance from deck to a resting platform, between resting platforms, or a resting platform and the tank bottom should not be more than 6 m, unless otherwise approved by the Administration.

MA for inspection of the vertical structure of oil tankers:

Vertical ladders provided for means of access to the space may be used for access for inspection of the vertical structure.

Unless stated otherwise in table 1 of TP, vertical ladders that are fitted on vertical structures for inspection should comprise one or more ladder-linking platforms spaced not more than 6 m apart vertically and displaced to one side of the ladder. Adjacent sections of ladder should be laterally offset from each other by at least the width of the ladder (see paragraph 20 of MSC/Circ.686).

Obstruction distances

The minimum distance between the inclined ladder face and obstructions, i.e. 750 mm and, in the way of openings, 600 mm specified in TP 3.5 should be measured perpendicular to the face of the ladder.

Technical background

It is common practice to use a vertical ladder from the deck to the first landing to clear overhead obstructions before continuing to an inclined ladder or a vertical ladder displaced to one side of the first vertical ladder.

Reference

For vertical ladders: paragraph 20 of the annex to MSC/Circ.686.

2.7 PARAGRAPH 3.6

Interpretation

1 The vertical height of handrails should not be less than 890 mm from the centre of the step and two course handrails need only be provided where the gap between the stringer and the top handrail is greater than 500 mm.

2 The requirement of two square bars for treads specified in TP, paragraph 3.6, is based upon the specification of the construction of ladders in paragraph 3(e) of annex 1 to resolution A.272(VIII), which addresses inclined ladders. TP, paragraph 3.4, allows for single rungs fitted to vertical surfaces, which is considered a safe grip. For vertical ladders, when steel is used, the rungs should be formed of single square bars of not less than 22 mm by 22 mm for the sake of safe grip.

3 The width of inclined ladders for access to a cargo hold should be at least 450 mm to comply with the Australian AMSA Marine Orders part 32, appendix 17.

4 The width of inclined ladders other than an access to a cargo hold should be not less than 400 mm.

5 The minimum width of vertical ladders should be 350 mm and the vertical distance between the rungs should be equal and should be between 250 mm and 350 mm.

6 A minimum climbing clearance in width should be 600 mm other than the ladders placed between the hold frames.

7 The vertical ladders should be secured at intervals not exceeding 2.5 m apart to prevent vibration.

Technical background

1 TP, paragraph 3.6, is a continuation of TP, paragraph 3.5, which addresses inclined ladders. Interpretations for vertical ladders are needed based upon the current standards of IMO, AMSA or the industry.

2 Interpretations 2 and 5 address vertical ladders based upon the current standards.

3 Double square bars for treads become too large for a grip for vertical ladders and single rungs facilitate a safe grip.

4 Interpretation 7 is introduced consistently with the requirement and the interpretation of TP, paragraph 3.4.

Reference

1 Annex 1 to resolution A.272(VIII).

2 Australian AMSA Marine Orders part 32, appendix 17.

3 ILO Code of Practice "Safety and Health in Dockwork" – section 3.6, Access to Ship's Holds.

2.8 PARAGRAPH 3.9.6

Interpretation

A mechanical device such as hooks for securing at the upper end of a ladder should be considered as an appropriate securing device if a movement fore/aft and sideways can be prevented at the upper end of the ladder.

Technical background

Innovative design should be accepted if it fits the functional requirement with due consideration for safe use.

2.9 PARAGRAPHS 3.10 AND 3.11

Interpretation

See interpretation for paragraphs 5.1 and 5.2 of SOLAS regulation II-1/3-6.

2.10 PARAGRAPH 3.13.1

Interpretation

Either a vertical or an inclined ladder or a combination of them may be used for access to a cargo hold where the vertical distance is 6 m or less from the deck to the bottom of the cargo hold.

2.11 TABLE 1 – MEANS OF ACCESS FOR BALLAST AND CARGO TANKS OF OIL TANKERS, PARAGRAPH 1.1

Interpretation

1 Subparagraphs .1, .2 and .3 define access to under-deck structure, access to the uppermost sections of transverse webs and connection between these structures.

2 Subparagraphs .4, .5 and .6 define access to vertical structures only and are linked to the presence of transverse webs on longitudinal bulkheads.

3 If there are no under-deck structures (deck longitudinals and deck transverses) but there are vertical structures in the cargo tank supporting transverse and longitudinal bulkheads, access in accordance with subparagraphs from .1 through to .6 should be provided for inspection of the upper parts of vertical structure on transverse and longitudinal bulkheads.

4 If there is no structure in the cargo tank, section 1.1 of table 1 should not be applied.

5 Section 1 of table 1 should also be applied to void spaces in the cargo area, comparable in volume to spaces covered by regulation II-1/3-6, except those spaces covered by section 2.

6 The vertical distance below the overhead structure should be measured from the underside of the main deck plating to the top of the platform of the means of access at a given location.

7 The height of the tank should be measured at each tank. For a tank the height of which varies at different bays, item 1.1 should be applied to such bays of a tank that have a height of 6 m and over.

Technical background

Interpretation 7, if the height of the tank is increasing along the length of a ship, the permanent means of access should be provided locally where the height is above 6 m.

Reference

Paragraph 10 of the annex to MSC/Circ.686.

2.12 TABLE 1 – MEANS OF ACCESS FOR BALLAST AND CARGO TANKS OF OIL TANKERS, PARAGRAPH 1.1.2

Interpretation

There is a need to provide a continuous longitudinal permanent means of access when the deck longitudinals and deck transverses are fitted on deck but supporting brackets are fitted under the deck.

2.13 TABLE 1 – MEANS OF ACCESS FOR BALLAST AND CARGO TANKS OF OIL TANKERS, PARAGRAPH 1.1.3

Interpretation

Means of access to tanks may be used for access to the permanent means of access for inspection.

Technical background

As a matter of principle, in such a case where the means of access can be utilized for the purpose of accessing structural members for inspection there is no need of duplicated installation of the MA.

2.14 TABLE 1 – MEANS OF ACCESS FOR BALLAST AND CARGO TANKS OF OIL TANKERS, PARAGRAPH 1.1.4

Interpretation

The permanent fittings required to serve alternative means of access such as wire lift platform, that should be used by crew and surveyors for inspection should provide at least an equal level of safety as the permanent means of access stated by the same paragraph. These means of access should be carried on board the ship and be readily available for use without filling of water in the tank. Therefore, rafting should not be acceptable under this provision. Alternative means of access should be part of the Access Manual which should be approved on behalf of the flag State. For water ballast tanks of 5 m or more in width, such as on an ore carrier, side shell plating should be considered in the same way as "longitudinal bulkhead".

2.15 TABLE 1 – MEANS OF ACCESS FOR BALLAST AND CARGO TANKS OF OIL TANKERS, PARAGRAPH 2.1

Interpretation

Section 2 of table 1 should also be applied to wing tanks designed as void spaces. Paragraph 2.1.1 represents requirements for access to under-deck structures, while paragraph 2.1.2 is a requirement for access for survey and inspection of vertical structures on longitudinal bulkheads (transverse webs).

Technical background

Regulation II-1/3-6.2.1 requires each space to be provided with means of access. Though void spaces are not addressed in the technical provisions contained in resolution MSC.158(78), it is arguable whether MA are not required in void spaces. MA or portable means of access are

necessary arrangements to facilitate inspection of the structural condition of the space and the boundary structure. Therefore the requirements of section 2 of table 1 should be applied to double-hull spaces even when designed as void spaces.

2.16 TABLE 1 – MEANS OF ACCESS FOR BALLAST AND CARGO TANKS OF OIL TANKERS, PARAGRAPH 2.1.1

Interpretation

1 For a tank, the vertical distance between horizontal upper stringer and deck head of which varies at different sections, item 2.1.1 should be applied to such sections that fall under the criteria.

2 The continuous permanent means of access may be a wide longitudinal, which provides access to critical details on the opposite side by means of platforms as necessary on web frames. In case the vertical opening of the web frame is located in the way of the open part between the wide longitudinal and the longitudinal on the opposite side, platforms should be provided on both sides of the web frames to allow safe passage through the web frame.

3 Where two access hatches are required by SOLAS regulation II-1/3-6.3.2, access ladders at each end of the tank should lead to the deck.

Technical background

Interpretation 1: The interpretation of varied tank height in item 1 of table 1 is applied to the vertical distance between horizontal upper stringer and deck head for consistency.

2.17 TABLE 1 – MEANS OF ACCESS FOR BALLAST AND CARGO TANKS OF OIL TANKERS, PARAGRAPH 2.1.2

Interpretation

The continuous permanent means of access may be a wide longitudinal, which provides access to critical details on the opposite side by means of platforms as necessary on web frames. In case the vertical opening of the web is located in the way of the open part between the wide longitudinal and the longitudinal on the opposite side, platforms should be provided on both sides of the web to allow safe passage through the web. A "reasonable deviation", as noted in TP, paragraph 1.4, of not more than 10 per cent may be applied where the permanent means of access is integral with the structure itself.

2.18 TABLE 1 – MEANS OF ACCESS FOR BALLAST AND CARGO TANKS OF OIL TANKERS, PARAGRAPH 2.2

Interpretation

1 Permanent means of access between the longitudinal continuous permanent means of access and the bottom of the space should be provided.

2 The height of a bilge hopper tank located outside of the parallel part of the ship should be taken as the maximum of the clear vertical distance measured from the bottom plating to the hopper plating of the tank.

3 The foremost and aftmost bilge hopper ballast tanks with raised bottom, of which the height is 6 m and over, a combination of transverse and vertical MA for access to the upper knuckle point for each transverse web, should be accepted in place of the longitudinal permanent means of access.

Technical background

Interpretation 2: The bilge hopper tanks at fore and aft of cargo area narrow due to raised bottom plating and the actual vertical distance from the bottom of the tank to hopper plating of the tank is more appropriate to judge if a portable means of access could be utilized for the purpose.

Interpretation 3: In the foremost or aftmost bilge hopper tanks where the vertical distance is 6 m or over but installation of longitudinal permanent means of access is not practicable, permanent means of access of combination of transverse and vertical ladders provides an alternative means of access to the upper knuckle point.

2.19 TABLE 2 – MEANS OF ACCESS FOR BULK CARRIERS, PARAGRAPH 1.1

Interpretation

1 Means of access should be provided to the cross-deck structures of the foremost and aftermost part of each cargo hold.

2 Interconnected means of access under the cross deck for access to three locations at both sides and in the vicinity of the centreline should be acceptable as the three means of access.

3 Permanent means of access fitted at three separate locations accessible independently, one at each side and one in the vicinity of the centreline, should be acceptable.

4 Special attention should be paid to the structural strength where any access opening is provided in the main deck or cross deck.

5 The requirements for a bulk carrier cross-deck structure should also be considered applicable to ore carriers.

Technical background

Pragmatic arrangements of the MA are provided.

2.20 TABLE 2 – MEANS OF ACCESS FOR BULK CARRIERS, PARAGRAPH 1.3

Interpretation

Particular attention should be paid to preserve the structural strength in way of access opening provided in the main deck or cross deck.

2.21 TABLE 2 – MEANS OF ACCESS FOR BULK CARRIERS, PARAGRAPH 1.4

Interpretation

"Full upper stools" are understood to be stools with a full extension between topside tanks and between hatch end beams.

2.22 TABLE 2 – MEANS OF ACCESS FOR BULK CARRIERS, PARAGRAPH 1.5

Interpretation

1 The movable means of access to the under-deck structure of cross deck need not necessarily be carried on board the ship. It should be sufficient if it is made available when needed.

2 The requirements for a bulk carrier cross-deck structure should also be considered applicable to ore carriers.

2.23 TABLE 2 – MEANS OF ACCESS FOR BULK CARRIERS, PARAGRAPH 1.6

Interpretation

The maximum vertical distance of the rungs of vertical ladders for access to hold frames should be 350 mm. If a safety harness is to be used, means should be provided for connecting the safety harness in suitable places in a practical way.

Technical background

The maximum vertical distance of the rungs of 350 mm is applied with a view to reducing trapping cargoes.

2.24 TABLE 2 – MEANS OF ACCESS FOR BULK CARRIERS, PARAGRAPH 1.7

Interpretation

Portable, movable or alternative means of access should also be applied to corrugated bulkheads.

2.25 TABLE 2 – MEANS OF ACCESS FOR BULK CARRIERS, PARAGRAPH 1.8

Interpretation

Readily available means able to be transported to location in cargo hold and safely erected by ships' crew.

2.26 TABLE 2 – MEANS OF ACCESS FOR BULK CARRIERS, PARAGRAPH 2.3

Interpretation

If the longitudinal structures on the sloping plate are fitted outside of the tank, a means of access should be provided.

2.27 TABLE 2 – MEANS OF ACCESS FOR BULK CARRIERS, PARAGRAPH 2.5

Interpretation

1 The height of a bilge hopper tank located outside of the parallel part of the vessel should be taken as the maximum of the clear vertical height measured from the bottom plating to the hopper plating of the tank.

2 It should be demonstrated that portable means for inspection can be deployed and made readily available in the areas where needed.

2.28 TABLE 2 – MEANS OF ACCESS FOR BULK CARRIERS, PARAGRAPH 2.5.2

Interpretation

A wide longitudinal frame of at least 600 mm clear width may be used for the purpose of the longitudinal continuous permanent means of access. The foremost and aftermost bilge hopper ballast tanks with raised bottom, of which the height is 6 m and over, a combination of transverse and vertical MA for access to the sloping plate of hopper tank connection with side shell plating for each transverse web can be accepted in place of the longitudinal permanent means of access.

2.29 TABLE 2 – MEANS OF ACCESS FOR BULK CARRIERS, PARAGRAPH 2.6

Interpretation

The height of web frame rings should be measured in way of side shell and tank base.

Technical background

In the bilge hopper tank the sloping plating is above the opening, while the movement of the surveyor is along the bottom of the tank. Therefore the measurement of 1 m should be taken from the bottom of the tank.

3 SOLAS REGULATION II-1/26 – GENERAL

3.1 SOLAS REGULATION II-1/26.4, DEAD SHIP CONDITION

Interpretation

1 Dead ship condition for the purpose of regulation II-1/26.4 should be understood to mean a condition under which the main propulsion plant, boilers and auxiliaries are not in operation and in restoring the propulsion, no stored energy for starting and operating the propulsion plant, the main source of electrical power and other essential auxiliaries is assumed to be available.

2 Where the emergency source of power is an emergency generator which complies with regulation II-1/44, IACS SC185 and IACS SC124, this generator may be used for restoring operation of the main propulsion plant, boilers and auxiliaries where any power supplies necessary for engine operation are also protected to a similar level as the starting arrangements.

3 Where there is no emergency generator installed or an emergency generator does not comply with regulation II-1/44, the arrangements for bringing main and auxiliary machinery into operation should be such that the initial charge of starting air or initial electrical power and any power supplies for engine operation can be developed on board ship without external aid. If for this purpose an emergency air compressor or an electric generator is required, these units should be powered by a hand-starting oil engine or a hand-operated compressor. The arrangements for bringing main and auxiliary machinery into operation should have capacity such that the starting energy and any power supplies for engine operation are available within 30 min of a dead ship condition.

3.2 SOLAS REGULATION II-1/26.11, MACHINERY INSTALLATIONS – SERVICE TANK ARRANGEMENTS

Interpretation

1 Arrangements complying with this regulation and acceptable "equivalent arrangements", for the most commonly utilized fuel systems, are shown below.

2 A service tank is a fuel oil tank which contains only fuel of a quality ready for use, i.e. fuel of a grade and quality that meets the specification required by the equipment manufacturer. A service tank should be declared as such and not be used for any other purpose.

3 Use of a setting tank with or without purifiers, or purifiers alone, and one service tank is not acceptable as an "equivalent arrangement" to two service tanks.

Examples of application for the most common systems

1 Example 1

1.1 Requirement according to SOLAS – Main and auxiliary engines and boiler(s) operating with heavy fuel oil (HFO) (one fuel ship)

HFO Serv. TK Capacity for at least 8 h Main Eng. + Aux. Eng. + Aux. Boiler	HFO Serv. TK Capacity for at least 8 h Main Eng. + Aux. Eng. + Aux. Boiler	MDO TK For initial cold starting or repair work Engines/Boiler

1.2 Equivalent arrangement

HFO Serv. TK Capacity for at least 8 h Main Eng. + Aux. Eng. + Aux. Boiler	MDO Serv. TK Capacity for at least 8 h Main Eng. + Aux. Eng. + Aux. Boiler

This interpretation only applies where main and auxiliary engines can operate with heavy fuel oil under all load conditions and, in the case of main engines, during manoeuvring.

For pilot burners of auxiliary boilers if provided, an additional MDO tank for eight hours may be necessary.

2 Example 2

2.1 Requirement according to SOLAS – Main engine(s) and auxiliary boiler(s) operating with HFO and auxiliary engine operating with marine diesel oil (MDO)

HFO Serv. TK Capacity for at least 8 h Main Eng. + Aux. Boiler	HFO Serv. TK Capacity for at least 8 h Main Eng. + Aux. Boiler	MDO Serv. TK Capacity for at least 8 h Aux. Eng.	MDO Serv. TK Capacity for at least 8 h Aux. Eng.

2.2 Equivalent arrangement

HFO Serv. TK Capacity for at least 8 h Main Eng. + Aux. Boiler	MDO Serv. TK Capacity for at least the highest of: • 4 h Main Eng. + Aux. Eng + Aux. Boiler or • 8 h Aux. Eng. + Aux Boiler	MDO Serv. TK Capacity for at least the highest of: • 4 h Main Eng. + Aux. Eng + Aux. Boiler or • 8 h Aux. Eng. + Aux Boiler

The arrangements in paragraphs 1.2 and 2.2 apply, provided the propulsion and vital systems which use two types of fuel support rapid fuel changeover and are capable of operating in all normal operating conditions at sea with both types of fuel (MDO and HFO).

4 SOLAS REGULATIONS II-1/40 – GENERAL – AND II-1/41 – MAIN SOURCE OF ELECTRICAL POWER AND LIGHTING SYSTEMS

Interpretation

Essential services and arrangements of sources of power, supply, control and monitoring to the different categories of essential services

1 Classification of essential services

1.1 Essential services are those services essential for propulsion and steering, and safety of the ship, which are made up of "Primary Essential Services" and "Secondary Essential Services". Definitions and examples of such services are given in 2 and 3 below.

1.2 Services to ensure minimum comfortable conditions of habitability are those services defined in 4 below.

2 Primary Essential Services

Primary Essential Services are those services which need to be in continuous operation to maintain propulsion and steering. Examples of equipment for "Primary Essential Services" are as follows:

- steering gears;
- pumps for controllable pitch propellers;
- scavenging air blower, fuel oil supply pumps, fuel valve cooling pumps, lubricating oil pumps and cooling water pumps for main and auxiliary engines and turbines necessary for propulsion;

- forced draught fans, feed water pumps, water circulating pumps, vacuum pumps and condensate pumps for steam plants on steam turbine ships, and also for auxiliary boilers on ships where steam is used for equipment supplying primary essential services;
- oil burning installations for steam plants on steam turbine ships and for auxiliary boilers where steam is used for equipment supplying primary essential services;
- azimuth thrusters, which are the sole means for propulsion/steering with lubricating oil pumps, cooling water pumps;
- electrical equipment for electric propulsion plant with lubricating oil pumps and cooling water pumps;
- electric generators and associated power sources supplying the above equipment;
- hydraulic pumps supplying the above equipment;
- viscosity control equipment for heavy fuel oil;
- control, monitoring, and safety devices/systems for equipment to primary essential services;
- fire pumps and other fire extinguishing medium pumps;
- navigation lights, aids and signals;
- internal safety communication equipment;
- lighting system.

3 Secondary Essential Services

Secondary Essential Services are those services which need not necessarily be in continuous operation to maintain propulsion and steering but which are necessary for maintaining the vessel's safety. Examples of equipment for secondary essential services are as follows:

- windlass;
- fuel oil transfer pumps and fuel oil treatment equipment;
- lubrication oil transfer pumps and lubrication oil treatment equipment;
- pre-heaters for heavy fuel oil;
- starting air and control air compressors;
- bilge, ballast and heeling pumps;
- ventilating fans for engine and boiler rooms;
- services considered necessary to maintain dangerous spaces in a safe condition;
- fire detection and alarm system;
- electrical equipment for watertight closing appliances;
- electric generators and associated power sources supplying the above equipment;
- hydraulic pumps supplying the above equipment;
- control, monitoring, and safety systems for cargo containment systems;
- control, monitoring, and safety devices/systems for equipment to secondary essential services.

4 Services for habitability

Services for habitability are those services which need to be in operation for maintaining the ship's minimum comfort conditions for the crew and passengers. Examples of equipment for maintaining conditions of habitability are as follows:

- cooking;
- heating;
- domestic refrigeration;
- mechanical ventilation;

- sanitary and fresh water;
- electrical generators and associated power sources supplying the above equipment.

5 Regulation II-1/40.1.1 and regulation II-1/41.1.1 – For the purposes of these regulations, the services as included in paragraphs 2 to 4 should be considered.

6 Regulation II-1/40.1.2 – For the purposes of this regulation, the services as included in paragraphs 2 and 3 and the services in regulation II-1/42 or II-1/43, as applicable, should be considered.

7 Regulation II-1/41.1.2 – For the purposes of this regulation, the services as included in paragraphs 2 to 4, except for those also listed in Interpretation 3 (SOLAS chapter II-1, regulation 41.1.2), should be considered.

8 Regulation II-1/41.1.5 – For the purposes of this regulation, the services as included in paragraphs 2, 3 and 4 should be considered[1].

9 Regulation II-1/41.5.1.2 – For the purposes of this regulation, the following interpretations are applicable:

.1 services in paragraph 2 should not be included in any automatic load shedding or other equivalent arrangements;

.2 services in paragraph 3 may be included in the automatic load shedding or other equivalent arrangement provided disconnection will not prevent services required for safety being immediately available when the power supply is restored to normal operating conditions; and

.3 services for habitability in paragraph 4 may be included in the load shedding or other equivalent arrangement.

5 SOLAS REGULATION II-1/41 – MAIN SOURCE OF ELECTRICAL POWER AND LIGHTING SYSTEMS

5.1 SOLAS REGULATION II-1/41.1.2, MAIN SOURCE OF ELECTRICAL POWER

Interpretation

Those services necessary to provide normal operational conditions of propulsion and safety do not include services such as:

.1 thrusters not forming part of the main propulsion;

.2 moorings;

.3 cargo handling gear;

.4 cargo pumps; and

.5 refrigerators for air conditioning (those which are not necessary to establish a minimum condition of habitability).

[1] See also IACS UI SC83.

5.2 SOLAS REGULATION II-1/41.1.3, SHAFT-DRIVEN GENERATOR SYSTEMS

Interpretation

Generators and generator systems, having the ship's main propulsion machinery as their prime mover, may be accepted as part of the ship's main source of electrical power, provided:

1 They should be capable of operating under all weather conditions during sailing and during manoeuvring, also when the ship is stopped, within the specified limits for the voltage variation in IEC 60092-301 and the frequency variation in IACS UR E5.

2 Their rated capacity is safeguarded during all operations given under 1, and is such that in the event of any other one of the generators failing, the services given under regulation II-1/41.1.2 (Interpretation 3) can be maintained.

3 The short circuit current of the generator/generator system is sufficient to trip the generator/generator system circuit-breaker taking into account the selectivity of the protective devices for the distribution system.

Protection should be arranged in order to safeguard the generator/generator system in case of a short circuit in the main bus bar. The generator/generator system should be suitable for further use after fault clearance.

4 Standby sets are started in compliance with paragraph 2.2 of SOLAS chapter II-1, regulation II-1/41.5 (Interpretation 5).

5.3 SOLAS REGULATION II-1/41.5.1.3, CONNECTING MEANS BY WHICH THE MAIN BUS BARS OF THE MAIN SOURCE OF ELECTRICAL POWER ARE NORMALLY CONNECTED

Interpretation

1 Other approved means can be achieved by:

.1 circuit breaker without tripping mechanism; or

.2 disconnecting link or switch by which bus bars can be split easily and safely.

2 Bolted links, for example bolted bus bar sections, should not be accepted.

5.4 SOLAS REGULATION II-1/41.5

Interpretation of paragraph 41.5.1.1

1 Where the electrical power is normally supplied by more than one generator set simultaneously in parallel operation, provision of protection, including automatic disconnection of sufficient non-essential services and if necessary secondary essential services as defined in the unified interpretation of SOLAS regulation II-1/40 and 41 above (Interpretation 2) and those provided for habitability, should be made to ensure that, in case of loss of any of these generating sets, the remaining ones are kept in operation to permit propulsion and steering and to ensure safety.

2 Where Administrations permit electrical power to be normally supplied by one generator, provision should be made, upon loss of power, for automatic starting and connecting to the main switchboard of stand-by generator(s) of sufficient capacity with automatic restarting of the essential auxiliaries, in sequential operation if required. Starting and connection to the main switchboard of one generator should be as rapid as possible, preferably within 30 minutes after loss of power. Where prime movers with longer starting time are used, this starting and connection time may be exceeded upon approval from the Administration.

Interpretation of paragraph 41.5.1.2

3 The load shedding should be automatic.

4 The non-essential services, service for habitable conditions, may be shed and, where necessary, additionally the Secondary Essential Services, sufficient to ensure the connected generator set(s) is/are not overloaded.

6 SOLAS REGULATIONS II-1/42 AND II-1/43 – EMERGENCY SOURCE OF ELECTRICAL POWER IN PASSENGER AND CARGO SHIPS

Interpretation

1 "Blackout" as used in regulations II-1/42.3.4 and II-1/43.3.4 should be understood to mean a "dead ship" condition-initiating event.

2 "Dead ship" condition, for the purpose of regulations II-1/42.3.4 and II-1/43.3.4, should be understood to mean a condition under which the main propulsion plant, boilers and auxiliaries are not in operation and in restoring the propulsion, no stored energy for starting the propulsion plant, the main source of electrical power and other essential auxiliaries should be assumed available. It is assumed that means are available to start the emergency generator at all times.

3 Emergency generator stored starting energy is not to be directly used for starting the propulsion plant, the main source of electrical power and/or other essential auxiliaries (emergency generator excluded).

4 For steam ships, the 30-min time limit given in SOLAS can be interpreted as time from blackout defined above to light-off of the first boiler.

5 Exceptionally is understood to mean conditions such as:

.1 blackout situation;

.2 dead ship situation;

.3 routine use for testing;

.4 short-term parallel operation with the main source of electrical power for the purpose of load transfer; and

.5 use of the emergency generator during lay time in port for the supply of the ship's main switchboard, provided the requirements of 6 (Suitable measures for the exceptional use of the emergency generator for power-supply of non-emergency circuits in port) are achieved and unless instructed otherwise by the Administration.

6 Suitable measures for the exceptional use of the emergency generator for power-supply of non-emergency circuits in port:

.1 To prevent the generator or its prime mover from becoming overloaded when used in port, arrangements should be provided to shed sufficient non-emergency loads to ensure its continued safe operation.

.2 The prime mover should be arranged with fuel oil filters and lubrication oil filters, monitoring equipment and protection devices as required for the prime mover for main power generation and for unattended operation.

.3 The fuel oil supply tank to the prime mover should be provided with a low-level alarm, arranged at a level ensuring sufficient fuel oil capacity for the emergency services for the period of time as required by SOLAS.

.4 The prime mover should be designed and built for continuous operation and should be subjected to a planned maintenance scheme ensuring that it is always available and capable of fulfilling its role in the event of an emergency at sea.

.5 Fire detectors should be installed in the location where the emergency generator set and emergency switchboard are installed.

.6 Means should be provided to readily change over to emergency operation.

.7 Control, monitoring and supply circuits, for the purpose of the use of emergency generator in port should be so arranged and protected that any electrical fault will not influence the operation of the main and emergency services.

.8 When necessary for safe operation, the emergency switchboard should be fitted with switches to isolate the circuits.

.9 Instructions should be provided on board to ensure that when the ship is under way all control devices (e.g. valves, switches) are in a correct position for the independent emergency operation of the emergency generator set and emergency switchboard.

7 SOLAS REGULATION II-1/44 – STARTING ARRANGEMENTS FOR EMERGENCY GENERATING SETS

7.1 SOLAS REGULATION II-1/44, PARAGRAPH 1

Interpretation (from MSC/Circ.736)

Emergency generating sets should be capable of being readily started in their cold condition at a temperature of 0ºC. If this is impracticable, or if lower temperatures are likely to be encountered, heating should be provided to ensure ready starting of the generating sets.

7.2 SOLAS REGULATION II-1/44, PARAGRAPH 2

Interpretation (from MSC/Circ.736)

Each emergency generating set arranged to be automatically started should be equipped with starting devices with a stored energy capability of at least three consecutive starts. A second source of energy should be provided for an additional three starts within 30 min unless manual starting can be demonstrated to be effective.

8 SOLAS CHAPTER II-1, PARTS B AND B-1

DOORS IN WATERTIGHT BULKHEADS OF PASSENGER SHIPS AND CARGO SHIPS

Interpretation

This interpretation pertains to doors[2] located in way of the internal watertight subdivision boundaries and the external watertight boundaries necessary to ensure compliance with the relevant subdivision and damage stability regulations.

This interpretation does not apply to doors located in external boundaries above equilibrium or intermediate waterplanes.

The design and testing requirements for watertight doors vary according to their location relative to the equilibrium waterplane or intermediate waterplane at any stage of assumed flooding.

1 DEFINITIONS

For the purpose of this interpretation the following definitions apply:

1.1 ***Watertight:*** Capable of preventing the passage of water in any direction under a design head. The design head for any part of a structure should be determined by reference to its location relative to the bulkhead deck or freeboard deck, as applicable, or to the most unfavourable equilibrium/intermediate waterplane, in accordance with the applicable subdivision and damage stability regulations, whichever is the greater. A watertight door is thus one that will maintain the watertight integrity of the subdivision bulkhead in which it is located.

1.2 ***Equilibrium waterplane:*** The waterplane in still water when, taking account of flooding due to an assumed damage, the weight and buoyancy forces acting on a ship are in balance. This relates to the final condition when no further flooding takes place or after cross flooding is completed.

1.3 ***Intermediate waterplane:*** The waterplane in still water, which represents the instantaneous floating position of a ship at some intermediate stage between commencement and completion of flooding when, taking account of the assumed instantaneous state of flooding, the weight and buoyancy forces acting on a ship are in balance.

[2] Doors in watertight bulkheads of small cargo ships, not subject to any statutory subdivision and damage stability requirements, may be hinged quick-acting doors arranged to open out of the major space protected. They should be constructed in accordance with the requirements of the Administration and have notices affixed to each side stating, "To be kept closed at sea".

1.4 ***Sliding door or rolling door:*** A door having a horizontal or vertical motion generally parallel to the plane of the door.

1.5 ***Hinged door:*** A door having a pivoting motion about one vertical or horizontal edge.

2 STRUCTURAL DESIGN

Doors and their frames should be of approved design and substantial construction in accordance with the requirements of the Administration and should preserve the strength of the subdivision bulkheads in which they are fitted.

3 OPERATION MODE, LOCATION AND OUTFITTING

Doors should be fitted in accordance with all requirements regarding their operation mode, location and outfitting, i.e. provision of controls, means of indication, etc., as shown in table 1 below. This table should be read in conjunction with paragraphs 3.1 to 5.4 below.

3.1 Frequency of use whilst at sea

3.1.1 *Normally closed:* Kept closed at sea but may be used if authorized. To be closed again after use.

3.1.2 *Permanently closed:* The time of opening such doors in port and of closing them before the ship leaves port should be entered in the logbook. Should such doors be accessible during the voyage, they should be fitted with a device to prevent unauthorized opening.

3.1.3 *Normally open:* May be left open provided it is always ready to be immediately closed.

3.1.4 *Used:* In regular use, may be left open provided it is ready to be immediately closed.

3.2 Type

Power operated, sliding or rolling[3]	POS
Power operated, hinged	POH
Sliding or rolling	S
Hinged	H

3.3 Control

3.3.1 Local

3.3.1.1 All doors, except those which should be permanently closed at sea, should be capable of being opened and closed by hand locally[4], from both sides of the doors, with the ship listed to either side.

3.3.1.2 For passenger ships, the angle of list at which operation by hand should be possible is 15º or 20º if the ship is allowed to heel up to 20º during intermediate stages of flooding.

[3] Rolling doors are technically identical to sliding doors.

[4] Arrangements for passenger ships should be in accordance with SOLAS regulation II-1/15.7.1.4.

3.3.1.3 For cargo ships, the angle of list at which operation by hand should be possible is 30º.

3.3.2 Remote

Where indicated in table 1, doors should be capable of being remotely closed by power from the bridge[5]. Where it is necessary to start the power unit for operation of the watertight door, means to start the power unit is also to be provided at remote control stations. The operation of such remote control should be in accordance with SOLAS regulations II-1/15.8.1 to 15.8.3.

3.4 Indication

3.4.1 Where shown in table 1, position indicators should be provided at all remote operating positions[6] as well as locally, on both sides of the doors[7], to show whether the doors are open or closed and, if applicable, with all dogs/cleats fully and properly engaged.

3.4.2 The door position indicating system should be of self-monitoring type and the means for testing of the indicating system should be provided at the position where the indicators are fitted.

3.4.3 An indication (i.e. red light) should be placed locally showing that the door is in remote control mode ("doors closed mode"). Refer also to SOLAS regulation II-1/15-8.1. Special care should be taken in order to avoid potential danger when passing through the door. Signboard/instructions should be placed in way of the door advising how to act when the door is in "doors closed" mode.

3.5 Alarms

3.5.1 Doors which should be capable of being remotely closed should be provided with an audible alarm, distinct from any other alarm in the area, which will sound whenever such a door is remotely closed. For passenger ships the alarm should sound for at least 5 s but not more than 10 s before the door begins to move and should continue sounding until the door is completely closed. In the case of remote closure by hand operation, an alarm is required to sound only while the door is actually moving.

3.5.2 In passenger areas and areas of high ambient noise, the audible alarms should be supplemented by visual signals at both sides of the doors.

3.6 Notices

As shown in table 1, doors which are normally closed at sea, but are not provided with means of remote closure, should have notices fixed to both sides of the doors stating: "To be kept closed at sea". Doors which should be permanently closed at sea should have notices fixed to both sides stating: "Not to be opened at sea".

---

5 Arrangements for passenger ships should be in accordance with SOLAS regulation II-1/15.7.1.5.

6 Indication at all remote control positions (SOLAS regulation II-1/15.6.4).

7 Refer to SOLAS regulation II-1/25-9.3.

3.7 Location

For passenger ships the watertight doors and their controls should be located in compliance with SOLAS regulations II-1/15.6.3 and II-1/15.7.1.2.2.

4 FIRE DOORS

4.1 Watertight doors may also serve as fire doors but need not be fire tested when intended for use below the bulkhead deck. Where such doors are used at locations above the bulkhead deck they should, in addition to complying with the provisions applicable to fire doors at the same locations, also comply with means of escape provisions of SOLAS regulation II-2/13 (2000 SOLAS amendments, resolution MSC.99(73)).

4.2 Where a watertight door is located adjacent to a fire door, both doors should be capable of independent operation, remotely if required by SOLAS regulations II-1/15.8.1 to 15.8.3 and from both sides of each door.

5 TESTING

5.1 Doors which become immersed by an equilibrium or intermediate waterplane or are below the freeboard or bulkhead deck should be subjected to a hydrostatic pressure test.

5.2 For large doors intended for use in the watertight subdivision boundaries of cargo spaces, structural analysis may be accepted in lieu of pressure testing. Where such doors utilize gasket seals, a prototype pressure test to confirm that the compression of the gasket material is capable of accommodating any deflection, revealed by the structural analysis, should be carried out.

5.3 Doors above freeboard or bulkhead deck, which are not immersed by an equilibrium or intermediate waterplane but become intermittently immersed at angles of heel in the required range of positive stability beyond the equilibrium position should be hose tested.

5.4 Pressure testing

5.4.1 The head of water used for the pressure test should correspond at least to the head measured from the lower edge of the door opening, at the location in which the door should be fitted in the ship, to the bulkhead deck or freeboard deck, as applicable, or to the most unfavourable damage waterplane, if that be greater. Testing may be carried out at the factory or other shore-based testing facility prior to installation in the ship.

5.4.2 Leakage criteria

5.4.2.1 The following acceptable leakage criteria should apply:

Doors with gaskets	No leakage
Doors with metallic sealing	Maximum leakage 1 *l*/min

5.4.2.2 Limited leakage may be accepted for pressure tests on large doors located in cargo spaces employing gasket seals or guillotine doors located in conveyor tunnels, in accordance with the following[8]:

$$\text{Leakage rate (}l\text{/min)} = \frac{(P+4.572)\,h^3}{6568}$$

where: P = perimeter of door opening (metres)
h = test head of water (metres)

5.4.2.3 However, in the case of doors where the water head taken for the determination of the scantling does not exceed 6.1 m, the leakage rate may be taken equal to 0.375 *l*/min if this value is greater than that calculated by the above-mentioned formula.

5.4.3 For doors of passenger ships which are normally open and used at sea and which become submerged by the equilibrium or intermediate waterplane, a prototype test should be conducted, on each side of the door, to check the satisfactory closing of the door against a force equivalent to a water height of at least 1 m above the sill on the centre line of the door[9].

5.5 Hose testing after installation

All watertight doors should be subject to a hose test[10] after installation in a ship. Hose testing should be carried out from each side of a door unless, for a specific application, exposure to floodwater is anticipated only from one side. Where a hose test is not practicable because of possible damage to machinery, electrical equipment insulation, or outfitting items, it may be replaced by means such as an ultrasonic leak test or an equivalent test.

8 Published in the ATM F 1196, Standard Specification for Sliding Watertight Door Assemblies and referenced in the Title 46 US Code of Federal Regulations 170.270 Door design, operation installation and testing.

9 Arrangements for passenger ships should be in accordance with SOLAS regulation II-1/15.6.2.

10 Refer to IACS URS 14.2.3 IACS Reg. 1996/Rev.2, 2001.

Table 1 – Internal doors in watertight bulkheads in cargo ships and passenger ships

Position relative to equilibrium or intermediate waterplane	1 Frequency of use whilst at sea	2 Type	3 Remote control[6]	4 Indication locally and on bridge[6]	5 Audible alarm[6]	6 Notice	7 Comments	8 Regulation
I. Passenger ships								
A. At or below	Normally closed	POS	Yes	Yes	Yes	No	Certain doors may be left open, see SOLAS II-1/15.9.3	SOLAS II-1/15.9.1, 15.9.2 and 15.9.3
	Permanently closed	S, H	No	No	No	Yes	See Notes 1 + 4	SOLAS II-1/15.10.1 and 15.10.2
B. Above	Normally open	POS, POH	Yes	Yes	Yes	No		SOLAS II-1/15.9.3 SOLAS II-1/20.1 MSC/Circ.541
	Normally closed	S, H	No	Yes	No	Yes	See Note 2	
		S, H	No	Yes	No	Yes	Doors giving access to ro-ro deck	SOLAS II-1/20-2
II. Cargo ships								
A. At or below	Used	POS	Yes	Yes	Yes	No		SOLAS II-1/25-9.2
	Normally closed	S, H	No	Yes	No	Yes	see Notes 2 + 3 + 5	SOLAS II-1/25-9.3
	Permanently closed	S, H	No	No	No	Yes	see Notes 1 + 4	SOLAS II-1/25-9.4 SOLAS II-1/25-10
B. Above	Used	POS	Yes	Yes	Yes	No		SOLAS II-1/25-9.2
	Normally closed	S, H	No	Yes	No	Yes	See Notes 2 + 5	SOLAS II-1/25-9.3 SOLAS II-1/25-10

Notes:

1 Doors in watertight bulkheads subdividing cargo spaces.
2 If hinged, this door should be of quick-acting or single-action type.
3 SOLAS requires remotely operated watertight doors to be sliding doors.
4 The time of opening such doors in port and closing them before the ship leaves port should be entered in the logbook.
5 The use of such doors should be authorized by the officer of the watch.
6 Cables for control and power systems to power-operated watertight doors and their status indication should comply with the requirements of IACS UR E15.

9 SOLAS REGULATION XII/9 – REQUIREMENTS FOR BULK CARRIERS NOT BEING CAPABLE OF COMPLYING WITH REGULATION 4.3 DUE TO THE DESIGN CONFIGURATION OF THEIR CARGO HOLDS

Bulk carriers not complying with SOLAS XII/9 as of 1 January 2004

Interpretation

Bulk carriers subject to SOLAS regulation XII/9, but which have not been brought into compliance with the regulation as of 1 January 2004, should comply with SOLAS regulation XII/12 in accordance with the compliance schedule of that regulation (i.e. not later than the date of the annual, intermediate or renewal survey of the ship to be carried out after 1 July 2004, whichever comes first).

10 SOLAS REGULATION XII/12 – HOLD, BALLAST AND DRY SPACE WATER INGRESS ALARMS

When water level detectors are installed on bulk carriers in compliance with SOLAS regulation XII/12, the *Performance standards for water level detectors on bulk carriers*, annexed to resolution MSC.145(77) adopted on 5 June 2003 should be applied, taking into account the following interpretations to the paragraphs of the Performance standards.

10.1 PERFORMANCE STANDARDS FOR WATER LEVEL DETECTORS ON BULK CARRIERS, PARAGRAPH 3.2.3

Interpretation

Detection equipment includes the sensor and any filter and protection arrangements for the detector installed in cargo holds and other spaces as required by SOLAS regulation XII/12.1.

10.2 PERFORMANCE STANDARDS FOR WATER LEVEL DETECTORS ON BULK CARRIERS, PARAGRAPH 3.2.5

Interpretation

1 In general, the construction and type testing should be in accordance with publication IEC 60079: Electrical Equipment for Explosive Gas Atmospheres to a minimum requirement of EX(ia). Where a ship is designed only for the carriage of cargoes that cannot create a combustible or explosive atmosphere then the requirement for intrinsically safe circuitry should not be insisted upon, provided the operational instructions included in the Manual required by 4.1 of the appendix to the annex specifically exclude the carriage of cargoes that could produce a potential explosive atmosphere. Any exclusion of cargoes identified in the annex should be consistent with the ship's Cargo Book and any Certification relating to the carriage of specifically identified cargoes.

2 The maximum surface temperature of equipment installed within cargo spaces should be appropriate for the combustible dusts and/or explosive gases likely to be encountered. Where the characteristics of the dust and gases are unknown, the maximum surface temperature of equipment should not exceed 85ºC.

3 Where intrinsically safe equipment is installed, it should be of a certified safe type.

4 Where detector systems include intrinsically safe circuits, plans of the arrangements should be appraised/approved by individual classification societies.

10.3 PERFORMANCE STANDARDS FOR WATER LEVEL DETECTORS ON BULK CARRIERS, PARAGRAPH 3.3.2

Interpretation

The pre-alarm, as a primary alarm, should indicate a condition that requires prompt attention to prevent an emergency condition and the main alarm, as an emergency alarm should indicate that immediate actions must be taken to prevent danger to human life or to the ship.

10.4 PERFORMANCE STANDARDS FOR WATER LEVEL DETECTORS ON BULK CARRIERS, PARAGRAPH 3.3.7

Interpretation

Fault monitoring should address faults associated with the system that include open circuit, short circuit, as well as arrangement details that would include loss of power supplies and CPU failure for computer based alarm/monitoring system, etc.

10.5 PERFORMANCE STANDARDS FOR WATER LEVEL DETECTORS ON BULK CARRIERS, PARAGRAPH 3.3.8

Interpretation

1 The electrical power supply should be from two separate sources, one should be the main source of electrical power and the other should be the emergency source, unless a continuously charged dedicated accumulator battery is fitted, having arrangement, location and endurance equivalent to that of the emergency source (18 h). The battery supply may be an internal battery in the water level detector system.

2 The changeover arrangement of supply from one electrical source to another need not be integrated into the water level detector system.

3 Where batteries are used for the secondary power supply, failure alarms for both power supplies should be provided.

10.6 PERFORMANCE STANDARDS FOR WATER LEVEL DETECTORS ON BULK CARRIERS, FOOTNOTE TO PARAGRAPH 3.4.1

Interpretation

1 IACS UR E10 may be used as an equivalent test standard to IEC 60092-504.

2 The range of tests should include the following:

For alarm/monitoring panel:

.1 functional tests in accordance with resolution MSC.145(77) – *Performance standards for water level detectors on bulk carriers*;

.2 electrical power supply failure test;

.3 power supply variation test;

.4 dry heat tests;

.5 damp heat tests;

.6 vibration test;

.7 EMC tests;

.8 insulation resistance test;

.9 high-voltage test; and

.10 static and dynamic inclinations tests, if moving parts are contained.

For IS barrier unit, if located in the wheelhouse: in addition to the certificate issued by a competent independent testing laboratory, EMC tests should also be carried out.

For water ingress detectors:

.1 functional tests in accordance with resolution MSC.145(77) – *Performance standards for water level detectors on bulk carriers*;

.2 electrical power supply failure test;

.3 power supply variation test;

.4 dry-heat test;

.5 damp-heat test;

.6 vibration test;

.7 enclosure class in accordance with resolution MSC.145(77) – *Performance standards for water level detectors on bulk carriers*;

.8 insulation resistance test;

.9 high-voltage test; and

.10 static and dynamic inclinations tests (if the detectors contain moving parts).

10.7 PERFORMANCE STANDARDS FOR WATER LEVEL DETECTORS ON BULK CARRIERS, APPENDIX, PARAGRAPH 2.1.1

Interpretation

The test procedure should satisfy the following criteria:

.1 the type tests should be witnessed by a classification society surveyor if the tests are not carried out by a competent independent test facility;

.2 type tests should be carried out on a prototype or randomly selected item(s) which are representative of the manufactured item that is being type tested; and

.3 type tests should be documented (type test reports) by the manufacturer and submitted for review by classification societies.

10.8 PERFORMANCE STANDARDS FOR WATER LEVEL DETECTORS ON BULK CARRIERS, APPENDIX, PARAGRAPH 2.1.1.1

Interpretation

1 The submerged test period for electrical components intended to be installed in ballast tanks and cargo tanks used as ballast tanks should be not less than 20 days.

2 The submerged test period for electrical components intended to be installed in dry spaces and cargo holds not intended to be used as ballast tanks should be not less than 24 h.

3 Where a detector and/or cable connecting device (e.g. junction box, etc.) is installed in a space adjacent to a cargo hold (e.g. lower stool, etc.) and the space is considered to be flooded under damage stability calculations, the detectors and equipment should satisfy the requirements of IP68 for a water head equal to the hold depth for a period of 20 days or 24 h on the basis of whether or not the cargo hold is intended to be used as a ballast tank as described in the previous paragraphs.

10.9 PERFORMANCE STANDARDS FOR WATER LEVEL DETECTORS ON BULK CARRIERS, APPENDIX, PARAGRAPH 2.1.1.2

Interpretation

1 The type test required for the sensor should be in accordance with the following:

.1 The test container for the cargo/water mixture should be dimensioned so that its height and volume are such that the sensor and any filtration fitted can be totally submerged for the repeated functionality tests required by paragraph 2.1.1.2 and the static and dynamic inclination tests identified in the previous interpretation.

.2 The sensor and any filtration fitted that should be submerged and should be arranged in the container as they would be installed in accordance with the installation instructions required by paragaph 4.4.

.3 The pressure in the container for testing the complete detector should be not more than 0.2 bar at the sensor and any filter arrangement. The pressure may be realized by pressurization or by using a container of sufficient height.

.4 The cargo/water mixture should be pumped into the test container and suitable agitation of the mixture provided to keep the solids in suspension. The effect of pumping the cargo/water mixture into the container should not affect the operation of the sensor and filter arrangements.

.5 The cargo/water mixture should be pumped into the test container to a predetermined level that submerges the detector and the operation of the alarm observed.

.6 The test container should then be drained and the deactivation of the alarm condition observed.

.7 The test container and sensor with any filter arrangement should be allowed to dry without physical intervention.

.8 The test procedure should be repeated consecutively ten times without cleaning any filter arrangement that may be fitted in accordance with the manufacturer's installation instructions (see also 2.1.1.2).

.9 Satisfactory alarm activation and deactivation at each of the 10 consecutive tests will demonstrate satisfactory type testing.

2 The cargo/water mixture used for type testing should be representative of the range of cargoes within the following groups and should include the cargo with the smallest particles expected to be found from a typical representative sample:

.1 iron ore particles and seawater;

.2 coal particles and seawater;

.3 grain particles and seawater; and

.4 aggregate (sand) particles and seawater.

The smallest and largest particle size together with the density of the dry mixture should be ascertained and recorded. The particles should be evenly distributed throughout the mixture. Type testing with representative particles will in general qualify all types of cargoes within the four groupings shown above.

The following provides guidance on the selection of particles for testing purposes:

.1 Iron ore particles should mainly consist of small loose screenings of iron ore and not lumps of ore (dust with particle size <0.1 mm).

.2 Coal particles should mainly consist of small loose screenings of coal and not lumps of coal (dust with particle size <0.1 mm).

.3 Grain particles should mainly consist of small loose grains of free-flowing grain (grain having a size >3 mm, such as wheat).

.4 Aggregate particles should mainly consist of small loose grains of free-flowing sand and without lumps (dust with particle size <0.1 mm).

10.10 PERFORMANCE STANDARDS FOR WATER LEVEL DETECTORS ON BULK CARRIERS, APPENDIX, PARAGRAPH 3.1.1

Interpretation

The test procedure should satisfy the following criteria:

.1 The type tests should be witnessed by a classification society surveyor if the tests are not carried out by a competent independent test facility.

.2 Type tests should be carried out on a prototype or randomly selected item(s) which are representative of the manufactured item that is being type tested.

.3 Type tests should be documented (type test reports) by the manufacturer and submitted for review by classification societies.

10.11 PERFORMANCE STANDARDS FOR WATER LEVEL DETECTORS ON BULK CARRIERS, APPENDIX, SECTION 4 – MANUALS

Interpretation

For each ship, a copy of the manual should be made available to the surveyor at least 24 hours prior to survey of the water-level detection installation. Each classification society should ensure that any plans required for classification purposes have been appraised/approved as appropriate.

11 SOLAS REGULATION XII/13 – AVAILABILITY OF PUMPING SYSTEMS

SOLAS regulation XII/13.1 and MSC/Circ.1069

Dewatering of forward spaces of bulk carriers

Interpretation

1 Where the piping arrangements for dewatering closed dry spaces are connected to the piping arrangements for the drainage of water ballast tanks, two non-return valves should be provided to prevent the ingress of water into dry spaces from those intended for the carriage of water ballast. One of these non-return valves should be fitted with a shut-off isolation arrangement. The non-return valves should be located in readily accessible positions. The shut-off isolation arrangement should be capable of being controlled from the navigation bridge, the propulsion machinery control position or enclosed space which is readily accessible from the navigation bridge or the propulsion machinery control position without travelling exposed freeboard or superstructure decks. In this context, a position which is accessible via an under-deck passage, a pipe trunk or other similar means of access should not be taken as being in the "readily accessible enclosed space".

2 Under SOLAS regulation XII/13.1:

.1 the valve specified under SOLAS regulation II-1/12.5.1 should be capable of being controlled from the navigation bridge, the propulsion machinery control position or enclosed space which is readily accessible from the navigation bridge or the propulsion machinery control position without travelling exposed freeboard or superstructure decks. In this context, a position which is accessible via an under-deck passage, a pipe trunk or other similar means of access should not be taken as being in the "readily accessible enclosed space";

.2 the valve should not move from the demanded position in the case of failure of the control system power or actuator power;

.3 positive indication should be provided at the remote control station to show that the valve is fully open or closed; and

.4 local hand-powered valve operation from above the freeboard deck, as permitted under SOLAS regulation II-1/12.5.1, is required. An acceptable alternative to such arrangement may be remotely operated actuators as specified in SOLAS regulation XII/13.1, on the condition that all of the provisions of regulation 13.1 are met.

3 The dewatering arrangements should be such that any accumulated water can be drained directly by a pump or eductor.

4 The dewatering arrangements should be such that when they are in operation, other systems essential for the safety of the ship including fire-fighting and bilge systems remain available and ready for immediate use. The systems for normal operation of electric power supplies, propulsion and steering should not be affected by the operation of the dewatering systems. It should also be possible to immediately start fire pumps and have a readily available supply of fire-fighting water and to be able to configure and use the bilge system for any compartment when the dewatering system is in operation.

5 Bilge wells should be provided with gratings or strainers that will prevent blockage of the dewatering system with debris.

6 The enclosures of electrical equipment for the dewatering system installed in any of the forward dry spaces should provide protection to IPX8 standard as defined in publication IEC 60529 for a water head equal to the height of the space in which the electrical equipment is installed for a time duration of at least 24 h.

***

ANNEX 2

DRAFT MSC CIRCULAR

UNIFIED INTERPRETATIONS OF THE PERFORMANCE STANDARD FOR PROTECTIVE COATINGS FOR DEDICATED SEAWATER BALLAST TANKS IN ALL TYPES OF SHIPS AND DOUBLE-SIDE SKIN SPACES OF BULK CARRIERS (RESOLUTION MSC.215(82))

1 The Maritime Safety Committee, at its [ninety-second session (…)], with a view to ensuring a uniform approach towards the application of the provisions of the *Performance standard for protective coatings for dedicated seawater ballast tanks in all types of ships and double-side skin spaces of bulk carriers* (resolution MSC.215(82)); and following the recommendation made by the Sub-Committee on Ship Design and Equipment, at its fifty-seventh session, approved unified interpretations for the above Performance standard, as set out in the annex. The unified interpretations in the annex revise the unified interpretations of the Performance standard approved by the Committee as MSC.1/Circ.1378.

2 Member Governments are invited to use the annexed unified interpretations when applying the relevant provisions of the Performance standard and to bring them to the attention of all parties concerned.

ANNEX

UNIFIED INTERPRETATIONS OF THE PERFORMANCE STANDARD FOR PROTECTIVE COATINGS FOR DEDICATED SEAWATER BALLAST TANKS IN ALL TYPES OF SHIPS AND DOUBLE-SIDE SKIN SPACES OF BULK CARRIERS (RESOLUTION MSC.215(82))

PSPC 2 – DEFINITIONS

"*2.6 "GOOD" condition is the condition with minor spot rusting as defined in resolution A.744(18)*."

Interpretation

1 GOOD: Condition with spot rusting on less than 3 per cent of the area under consideration without visible failure of the coating. Rusting at edges or welds should be on less than 20 per cent of edges or weld lines in the area under consideration.

2 Coating Technical File: A term used for the collection of documents describing issues related to the coating system and its application from the point in time when the first document is provided and for the entire life of the ship including the inspection agreement and all elements of PSPC 3.4.

PSPC 3 – GENERAL PRINCIPLES

"*3.2 Inspection of surface preparation and coating processes shall be agreed upon between the shipowner, the shipyard and the coating manufacturer and presented to the Administration for review. The Administration may, if it so requires, participate in the agreement process. Clear evidence of these inspections shall be reported and be included in the Coating Technical File (CTF) (see 3.4)*."

Interpretation

1 Inspection of surface preparation and coating processes agreement should be signed by shipyard, shipowner and coating manufacturer and should be presented by the shipyard to the Administration for review prior to commencement of any coating work on any stage of a new building and as a minimum should comply with the PSPC.

2 To facilitate the review, the following from the CTF should be available:

.1 Coating specification including selection of areas (spaces) to be coated, selection of coating system, surface preparation and coating process.

.2 Statement of Compliance or Type Approval of the coating system.

3 The agreement should be included in the CTF and should at least cover:

.1 Inspection process, including scope of inspection, who carries out the inspection, the qualifications of the coating inspector(s) and appointment of a qualified coating inspector (responsible for verifying that the coating is applied in accordance with the PSPC). Where more than one coating inspector will be used then their areas of responsibility should be identified (for example, multiple construction sites).

.2 Language to be used for documentation.

4 Any deviations in the procedure relative to the PSPC noted during the review should be raised with the shipyard, which is responsible for identifying and implementing the corrective actions.

5 A Passenger Ship Safety Certificate or Cargo Ship Safety Certificate or Cargo Ship Safety Construction Certificate, as appropriate, should not be issued until all required corrective actions have been closed to the satisfaction of the Administration.

"*3.4* ***Coating Technical File***

3.4.1 Specification of the coating system applied to the dedicated seawater ballast tanks and double-side skin spaces, record of the shipyard's and shipowner's coating work, detailed criteria for coating selection, job specifications, inspection, maintenance and repair shall be documented in the Coating Technical File (CTF), and the Coating Technical File shall be reviewed by the Administration.

3.4.2 New construction stage

...

3.4.3 In-service maintenance, repair and partial re-coating

In-service maintenance, repair and partial re-coating activities shall be recorded in the Coating Technical File in accordance with the relevant section of the Guidelines for coating maintenance and repair.

3.4.4 Re-coating

If a full re-coating is carried out, the items specified in 3.4.2 shall be recorded in the Coating Technical File.

3.4.5 The Coating Technical File shall be kept on board and maintained throughout the life of the ship."

Interpretation

Procedure for Coating Technical File Review

1 The shipyard is responsible for compiling the Coating Technical File (CTF) either in paper or electronic format, or a combination of the two.

2 The CTF should contain all the information required by the PSPC 3.4 and the inspection of surface preparation and the coating processes agreement (see PSPC 3.2).

3 The CTF should be reviewed for content in accordance with the PSPC 3.4.2.

4 Any deviations found under paragraph 3 should be raised with the shipyard, which is responsible for identifying and implementing the corrective actions.

5 A Passenger Ship Safety Certificate or Cargo Ship Safety Certificate or Cargo Ship Safety Construction Certificate, as appropriate, should not be issued until all required corrective actions have been closed to the satisfaction of the Administration.

"*3.5* ***Health and safety***

The shipyard is responsible for implementation of national regulations to ensure the health and safety of individuals and to minimize the risk of fire and explosion."

Interpretation

In order to document compliance with PSPC 3.5, relevant documentation from the coating manufacturer concerning health and safety aspects such as Material Safety Data Sheet is recommended to be included in the CTF for information.

PSPC 4 – COATING STANDARD

"*4.3* ***Special application***

4.3.1 This Standard covers protective coating requirements for the ship's steel structure. It is noted that other independent items are fitted within the tanks to which coatings are applied to provide protection against corrosion.

4.3.2 It is recommended that this Standard is applied, to the extent possible, to those portions of permanent means of access provided for inspection not integral to the ship's structure, such as rails, independent platforms, ladders, etc. Other equivalent methods of providing corrosion protection for the non-integral items may also be used, provided they do not impair the performance of the coatings of the surrounding structure. Access arrangements that are integral to the ship structure, such as increased stiffener depths for walkways, stringers, etc., are to fully comply with this Standard.

4.3.3 It is also recommended that supports for piping, measuring devices, etc., be coated in accordance with the non-integral items indicated in 4.3.2."

Interpretation

Reference is made to MSC/Circ.1279, "Guidelines for corrosion protection of permanent means of access arrangements", approved by MSC 84 in May 2008.

PSPC 4 – TABLE 1: FOOTNOTES OF STANDARDS

"*Footnotes:*

5 Type of gauge and calibration in accordance with SSPC-PA2:2004. Paint Application Specification No.2.

6 Reference standard: ISO 8501-1:1988/Suppl:1994. Preparation of steel substrate before application of paints and related products – Visual assessment of surface cleanliness.

7 Reference standard: ISO 8503-1/2:1988. Preparation of steel substrate before application of paints and related products – Surface roughness characteristics of blast-cleaned steel substrates.

8 Conductivity measured in accordance with ISO 8502-9:1998. Preparation of steel substrate before application of paints and related products – Test for the assessment of surface cleanliness.

9 Reference standard: ISO 8501-3:2001 (grade P2). Preparation of steel substrate before application of paints and related products – Visual assessment of surface cleanliness (referred to in 3.1).

10 Reference standard: ISO 8502-3:1993. Preparation of steel substrate before application of paints and related products – Test for the assessment of surface cleanliness (referred to in 3.5)."

Interpretation

Only the footnoted standards referred to in PSPC table 1 are to be applied.

PSPC 4 – TABLE 1: 1 DESIGN OF COATING SYSTEM

"*1.3 Coating pre-qualification test*

Epoxy-based systems tested prior to the date of entry into force of this Standard in a laboratory by a method corresponding to the test procedure in annex 1 or equivalent, which as a minimum meets the requirements for rusting and blistering; or which have documented field exposure for five years with a final coating condition of not less than "GOOD" may be accepted.

For all other systems, testing according to the procedure in annex 1, or equivalent, is required."

Interpretation

Procedure for Coating System Approval

1 A Type Approval Certificate showing compliance with the PSPC 5 should be issued if the results of either method A+D, or B+D, or C+D are found satisfactory by the Administration.

2 The Type Approval Certificate should indicate the product and the shop primer tested. The certificate should also indicate other type approved shop primers with which the product may be used which have undergone the crossover test in a laboratory meeting the requirements in Method A, 1.1 of this UI.

3 The documents required to be submitted are identified in the following sections, in addition for all type approvals the following documentation is required: Technical Data Sheet showing all the information required by PSPC 3.4.2.2.

4 Winter type epoxy requires separate prequalification tests, including a shop primer compatibility test according to PSPC annex 1. Winter and summer type coating are considered different unless Infrared (IR) identification and Specific Gravity (SG) demonstrate that they are the same.

Method A: Laboratory test

1 A coating pre-qualification test should be carried out by a test laboratory recognized by the Administration and the test laboratory should meet the requirements set out in IACS UR Z17.

2 For the coating pre-qualification test, the measured average dry film thickness (DFT) on each prepared test panels should not exceed a nominal DFT (NDFT) of 320 microns plus 20 per cent unless a paint manufacturer specifies a NDFT greater than 320 microns. In the latter case, the average DFT should not exceed the specified NDFT plus 20 per cent and the coating system should be certified to the specified NDFT if the system passes the tests according to annex 1 of resolution MSC.215(82). The measured DFT should meet the "90/10" rule and the maximum DFT should always be below the maximum DFT value specified by the manufacturer.

3 Results from satisfactory pre-qualification tests (PSPC table 1: 1.3) of the coating system should be documented and submitted to the Administration.

4 Type Approval tests should be carried out for the epoxy-based system with the stated shop primer in accordance with PSPC, annex 1. If the tests are satisfactory, a Type Approval Certificate should be issued to include both the epoxy and the shop primer. The Type Approval Certificate will allow the use of the epoxy either with the named shop primer or on bare prepared steel.

5 An epoxy-based system may be used with shop primers other than the one with which it was originally tested provided that the other shop primers are approved as part of a system (PSPC table 1: 2.3 and table 1: 3.2) and have been tested according to PSPC annex 1, appendix 1, 1.7, which is known as the "crossover test". If the test or tests are satisfactory, a Type Approval Certificate should be issued. In this instance, the Type Approval Certificate should include the details of the epoxy and a list of all shop primers with which it has been tested that have passed these requirements. The Type Approval Certificate will allow the use of the epoxy with all the named shop primers or on bare prepared steel.

6 Alternatively, the epoxy can be tested without shop primer on bare prepared steel to the requirements of the PSPC, annex 1. If the test or tests are satisfactory, a Type Approval Certificate should be issued. The Type Approval Certificate should just record the epoxy. The certificate will allow the use of the epoxy on bare prepared steel only. If, in addition, crossover tests are satisfactorily carried out with shop primers which are approved as part of a system, the Type Approval Certificate should include the details of shop primers which have satisfactorily passed the crossover test. In this instance, the Type Approval Certificate will allow the use of the epoxy-based system with all the named shop primers or on bare prepared steel.

7 The Type Approval Certificate is invalid if the formulation of either the epoxy or the shop primer is changed. It is the responsibility of the coating manufacturer to inform the Administration immediately of any changes to the formulation.

Method B: five years' field exposure

1 Coating manufacturer's records, which should at least include the information indicated in paragraph 2, should be examined to confirm that the coating system had five years' field exposure and that the current product is the same as that being assessed.

2 Manufacturer's records:

- original application records;
- original coating specification;
- original technical data sheet;
- current formulation's unique identification (code or number);

- if the mixing ratio of base and curing agent has changed, a statement from the coating manufacturer confirming that the composition mixed product is the same as the original composition. This should be accompanied by an explanation of the modifications made;
- current technical data sheet for the current production site;
- SG and IR identification of original product;
- SG and IR identification of the current product; and
- if original SG and IR cannot be provided, then a statement from the coating manufacturer confirming the readings for the current product are the same as those of the original.

3 Either class survey records from an Administration or a joint (coating manufacturer and Administration) survey of all ballast tanks of a selected ship should be carried out for the purpose of verification of compliance with the requirements of paragraphs 1 and 7. The reporting of the coating condition in both cases should be in accordance with IACS Recommendation 87, section 2.

4 The selected ship should have ballast tanks in regular use, of which:

- at least one tank is approximately 2,000 m^3 or more in capacity;
- at least one tank should be adjacent to a heated tank; and
- at least one tank contains an under-deck exposed to the sun.

5 In the case that the selected ship does not meet the requirements in 4, then the limitations should be clearly stated on the Type Approval Certificate. For example, the coating cannot be used in tanks adjacent to heated tanks or under-deck or tanks with a volume greater than the size surveyed.

6 In all cases of approval by Method B, the shop primer should be removed prior to application of the approved epoxy-based system coating, unless it can be confirmed that the shop primer applied during construction is identical in formulation to that applied in the selected ship used as a basis for the approval.

7 All ballast tanks should be in "GOOD" condition excluding mechanical damages, without touch up or repair in the prior five years.

8 "Good" is defined as: *Condition with spot rusting on less than 3 per cent of the area under consideration without visible failure of the coating. Rusting at edges or welds, must be on less than 20 per cent of edges or welds in the area under consideration.*

9 Examples of how to report coating conditions with respect to areas under consideration should be as those given in IACS Recommendation 87.

10 If the applied NDFT is greater than required by the PSPC, the applied NDFT will be the minimum to be applied during construction. This should be reported prominently on the Type Approval Certificate.

11 If the results of the inspection are satisfactory, a Type Approval Certificate should be issued to include both the epoxy-based system and the shop primer. The Type Approval Certificate should allow the use of the epoxy-based system either with the named shop primer or on bare prepared steel. The Type Approval Certificate should reference the inspection report which should also form part of the Coating Technical File.

12 The Type Approval Certificate is invalid if the formulation of either the epoxy-based system or the shop primer is changed. It is the responsibility of the coating manufacturer to inform the Administration immediately of any changes to the formulation.

Method C: Existing Marintek B1 approvals

1 Epoxy-based system coatings systems with existing satisfactory Marintek test reports minimum level B1 including relevant IR identification and SG, issued before 8 December 2006 can be accepted. If original SG and IR documentation cannot be provided, then a statement should be provided by the coating manufacturer, confirming that the readings for the current product are the same as those of the original.

2 The Marintek test report with IR and SG information should be reviewed and, if satisfactory, a Type Approval Certificate should be issued. The certificate should record the report reference and the shop primer used. The Type Approval Certificate should allow the use of the epoxy-based system either with the named shop primer, unless there is evidence to indicate that it is unsuitable, or on bare prepared steel.

3 The epoxy-based system approved by this method may be used with other shop primers if satisfactory crossover tests are carried out with shop primers which are approved as part of a system, see Method A, 4. In this instance, the Type Approval Certificate should include the details of the epoxy-based system and a list of all shop primers which have passed these requirements. The Type Approval Certificate will allow the use of the epoxy-based system with all the named shop primers or on bare prepared steel.

4 Such coatings should be applied in accordance with PSPC table 1, rather than the application conditions used during the approval test which may differ from the PSPC, unless these are more stringent than PSPC, annex 1, for example, if the NDFT is higher or high pressure water washing and/or sweep blasting of the shop primer is used. In such cases these limiting conditions should be added to the Type Approval Certificate and should be followed during coating application in the shipyard.

5 The Type Approval Certificate is invalid if the formulation of either the epoxy-based system or the shop primer is changed. It is the responsibility of the coating manufacturer to inform the Administration immediately of any changes to the formulation.

Method D: Coating manufacturer

1 The coating/shop primer manufacturer should meet the requirements set out in IACS UR Z17, paragraphs 4, 5, 6 and 7 (except for 4.6) and paragraphs 2 to 7 below, which should be verified by the Administration.

2 Coating manufacturers

.1 Extent of engagement – Production of coating systems in accordance with PSPC and this UI.

.2 These requirements apply to both the main coating manufacturer and the shop primer manufacturer where both coatings form part of the total system.

.3 The coating manufacturer should provide to the Administration the following information:

- A detailed list of the production facilities.
- Names and location of raw material suppliers will be clearly stated.
- A detailed list of the test standards and equipment to be used (Scope of approval).
- Details of quality control procedures employed.
- Details of any sub-contracting agreements.
- List of quality manuals, test procedures and instructions, records, etc.
- Copy of any relevant certificates with their issue number and/or date, e.g. Quality Management System certification.

.4 Inspection and audit of the manufacturer's facilities should be based on the requirements of the PSPC.

.5 With the exception of early "scale up" from laboratory to full production, adjustment outside the limitations listed in the QC instruction referred to below is not acceptable, unless justified by trials during the coating system's development programme, or subsequent testing. Any such adjustments must be agreed by the formulating technical centre.

.6 If formulation adjustment is envisaged during the production process, the maximum allowable limits should be approved by the formulating technical centre and clearly stated in the QC working procedures.

.7 The manufacturer's quality control system should ensure that all current production is the same formulation as that supplied for the Type Approval Certificate. Formulation change should not be permissible without testing in accordance with the test procedures in the PSPC and the issue of a Type Approval Certificate by the Administration.

.8 Batch records including all QC test results such as viscosity, specific gravity and airless spray characteristics should be accurately recorded. Details of any additions should also be included.

.9 Whenever possible, raw material supply and lot details for each coating batch should be traceable. Exceptions may be where bulk supply such as solvents and pre-dissolved solid epoxies are stored in tanks, in which case it may only be possible to record the supplier's blend.

.10 Dates, batch numbers and quantities supplied to each coating contract should be clearly recorded.

3 All raw material supply should be accompanied by the supplier's "Certificate of Conformance". The certificate should include all requirements listed in the coating manufacturer's QC system.

4 In the absence of a raw material supplier's certificate of conformance, the coating manufacturer should verify conformance to all requirements listed in the coating manufacturer's QC system.

5 Drums should be clearly marked with the details as described on the Type Approval Certificate.

6 Product Technical Data Sheets should comply with all the PSPC requirements. The QC system will ensure that all Product Technical Data Sheets are current.

7 QC procedures of the originating technical centre should verify that all production units comply with the above stipulations and that all raw material supply is approved by the technical centre.

8 In the case that a coating manufacturer wishes to have products which are manufactured in different locations under the same name, then IR identification and SG should be used to demonstrate that they are the same coating, or individual approval tests will be required for the paint manufactured in each location.

9 The Type Approval Certificate is invalid if the formulation of either the epoxy-based system or the shop primer is changed. It is the responsibility of the coating manufacturer to inform class immediately of any changes to the formulation. Failure to inform class of an alteration to the formulation should lead to cancellation of the certificates for that manufacturer's products.

"*1.4 Job specification*

...

1.5 NDFT (nominal total dry film thickness)[5]

..."

Interpretation

1 Wet film thickness should be regularly checked during application for quality control by the builder. The PSPC does not state who should check WFT, it is accepted for this to be the builder. Measurement of DFT should be done as part of the inspection required in PSPC 6.

2 Stripe coats should be applied as a coherent film showing good film formation and no visible defects. The application method employed should ensure that all areas that require stripe coating are properly coated by brush or roller. A roller may be used for scallops, ratholes, etc., but not for edges and welds.

PSPC 4 – TABLE 1: 2 PSP (PRIMARY SURFACE PREPARATION)

"*2. PSP (Primary Surface Preparation)*

2.1 Blasting and profile[6, 7]

Sa $2^1/_2$; with profiles between 30-75 µm

Blasting shall not be carried out when:

.1 the relative humidity is above 85 per cent; or

.2 the surface temperature of steel is less than 3°C above the dew point."

Interpretation

Checking of the steel surface cleanliness and roughness profile should be carried out at the end of the surface preparation and before the application of the primer, in accordance with the manufacturer's recommendations.

"*2.2 Water soluble salt limit equivalent to NaCl*[8]

≤ 50 mg/m^2 *of sodium chloride.*"

Interpretation

The conductivity of soluble salts should be measured in accordance with ISO 8502-6 and ISO 8502-9, and compared with the conductivity of 50 mg/m^2 NaCl. If the measured conductivity is less than or equal to, then it is acceptable. Minimum readings to be taken should be one (1) per plate in the case of manually applied shop primer. In cases where an automatic process for application of shop primer is used, there should be means to demonstrate compliance with PSPC through a Quality Control System, which should include a monthly test.

"*2.3 Shop primer*

Zinc containing inhibitor-free zinc silicate based or equivalent. Compatibility with main coating system shall be confirmed by the coating manufacturer."

Interpretation

Shop primers not containing zinc or not silicate based should be considered to be "alternative systems" and therefore equivalency should be established in accordance with Section 8 of the PSPC with test acceptance criteria for "alternative systems" given in section 3.1 (right columns) of appendices 1 and 2 to annex 1 of resolution MSC.215(82).

Procedure for review of quality control of automated shop primer plants

1 It is recognized that the inspection requirements of PSPC 6.2 may be difficult to apply to an automated shop primer plant and a quality control approach would be a more practical way of enabling compliance with the requirements of PSPC.

2 As required in PSPC, it is the responsibility of the coating inspector to confirm that the quality control procedures are ensuring compliance with PSPC.

3 When reviewing the quality control for automated shop primer plants the following procedures should be included:

.1 Procedures for management of the blasting grit including measurement of salt and contamination.

.2 Procedures recording the following: steel surface temperature, relative humidity, dewpoint.

.3 Procedures for controlling or monitoring surface cleanliness, surface profile, oil, grease, dust and other contamination.

.4 Procedures for recording/measuring soluble salts.

.5 Procedures for verifying thickness and curing of the shop primer conforms to the values specified in the Technical Specification.

PSPC 4 – TABLE 1: 3 SSP (SECONDARY SURFACE PREPARATION)

"*3.2 Sa 21/2 on damaged shop primers and welds*

Sa 2 removing at least 70 per cent of intact shop primer, which has not passed a prequalification certified by test procedures in 1.3.

3.3 Surface treatment after erection[6]

Butts St 3 or better or Sa $2^1/_2$ where practicable. Small damages up to 2 per cent of total area: St 3. Contiguous damages over 25 m^2 or over 2 per cent of the total area of the tank, Sa $2^1/_2$ shall be applied.

Coating in overlap shall be feathered.

3.4 In case of full or partial blasting 30-75 µm, otherwise as recommended by the coating manufacturer."

Interpretation

[1 Methods such as, but not limited to, UHP Water Jetting may be considered for Secondary Surface Preparation, where it can be demonstrated that the surface conditions specified by PSPC table 1, section 3, can be achieved before the application of the main coatings.]

2 Usually, the fillet welding on tank boundary watertight bulkhead is left without coating on block stage (because not yet been leakage tested), in which case it can be categorized as erection joint ("butt") to be power tooled to St 3.

"*3.6 Water soluble salts limit equivalent to NaCl after blasting/grinding*[8]

≤ 50 mg/m^2 of sodium chloride."

Interpretation

1 The conductivity of soluble salts is measured in accordance with ISO 8502-6 and ISO 8502-9, and compared with the conductivity of 50 mg/m^2 NaCl. If the measured conductivity is less than or equal to, then it is acceptable.

2 All soluble salts have a detrimental effect on coatings to a greater or lesser degree. ISO 8502-9:1998 does not provide the actual concentration of NaCl. The % NaCl in the total soluble salts will vary from site to site. Minimum readings to be taken should be one (1) reading per block/section/unit prior to applying.

PSPC 4 – TABLE 1: 4 MISCELLANEOUS

"*4.3 Testing of coating*[5]

Destructive testing shall be avoided.

Dry film thickness shall be measured after each coat for quality control purpose and the total dry film thickness shall be confirmed after completion of final coat, using appropriate thickness gauges (see annex 3)."

Interpretation

All DFT measurements should be measured. Only the final DFT measurements need to be measured and reported for compliance with the PSPC by the qualified coating inspector. The Coating Technical File may contain a summary of the DFT measurements which typically will consist of minimum and maximum DFT measurements, number of measurements taken and percentage above and below required DFT. The final DFT compliance with the 90/10 practice should be calculated and confirmed, see PSPC 2.8.

PSPC 5 – COATING SYSTEM APPROVAL

"*Results from pre-qualification tests (table 1, paragraph 1.3) of the coating system shall be documented and a Statement of Compliance or Type Approval Certificate shall be issued if found satisfactory by a third party, independent of the coating manufacturer*."

Interpretation

See Interpretation of PSPC table 1: 1 Design of coating system, 1.3 Coating prequalification test.

PSPC 6 – COATING INSPECTION REQUIREMENTS

"*6.1 General*

6.1.1 To ensure compliance with this Standard, the following shall be carried out by qualified coating inspectors certified to NACE Coating Inspector Level 2, FROSIO Inspector Level III or equivalent as verified by the Administration.

6.1.2 Coating inspectors shall inspect surface preparation and coating application during the coating process by carrying out, as a minimum, those inspection items identified in section 6.2 to ensure compliance with this Standard. Emphasis shall be placed on initiation of each stage of surface preparation and coatings application as improper work is extremely difficult to correct later in the coating progress. Representative structural members shall be non-destructively examined for coating thickness. The inspector shall verify that appropriate collective measures have been carried out.

6.1.3 Results from the inspection shall be recorded by the inspector and shall be included in the CTF (refer to annex 2 (Example of daily log and non-conformity report))."

Interpretation

Procedure for assessment of coating inspectors' qualifications

1 Coating inspectors required to carry out inspections in accordance with the PSPC 6 should be qualified to NACE Coating Inspector Level 2, FROSIO Inspector Level III, or an equivalent qualification. Equivalent qualifications are described in paragraph 3 below.

2 However, only coating inspectors with at least 2 years' relevant coating inspector experience and qualified to NACE Coating Inspector Level 2 or FROSIO Inspector Level III, or with an equivalent qualification, can write and/or authorize procedures, or decide upon corrective actions to overcome non-compliances.

3 Equivalent qualification

3.1 Equivalent qualification is the successful completion, as determined by the course tutor, of an approved course.

3.2 The course tutors should be qualified with at least 2 years' relevant experience and qualified to NACE Coating Inspector Level 2 or FROSIO Inspector Level III, or with an equivalent qualification.

3.3 Approved course: A course that has a syllabus based on the issues associated with the PSPC including the following:

- Health environment and safety
- Corrosion
- Materials and design
- International standards referenced in PSPC
- Curing mechanisms
- Role of inspector
- Test instruments
- Inspection procedures
- Coating specification
- Application procedures
- Coating failures
- Pre-job conference
- MSDS and product data sheet review
- Coating technical file
- Surface preparation
- Dehumidification
- Waterjetting
- Coating types and inspection criteria
- Specialized application equipment
- Use of inspection procedures for destructive testing and non-destructive testing instruments
- Inspection instruments and test methods
- Coating inspection techniques
- Cathodic protection
- Practical exercises, case studies

Examples of approved courses may be internal courses run by the coating manufacturers or shipyards, etc.

3.4 Such a course should have an acceptable measurement of performance, such as an examination with both theoretical and practical elements. The course and examination should be approved by the Administration.

3.5 Equivalent qualification arising from practical experience: An individual may be qualified without attending a course where it can be shown that the individual:

- has a minimum of five years' practical work experience as a coating inspector of ballast tanks during new construction within the last 10 years; and
- has successfully completed the examination given in paragraph 3.4.

4 Assistant to the coating inspectors

4.1 If the coating inspectors require assistance from other persons to do the part of the inspections under the coating inspector's supervision, those persons should be trained to the coating inspector's satisfaction.

4.2 Such training should be recorded and endorsed either by the inspector, the yard's training organization or inspection equipment manufacturer to confirm competence in using the measuring equipment and confirm knowledge of the measurements required by the PSPC.

4.3 Training records should be available for verification if required.

PSPC 7 – VERIFICATION REQUIREMENTS

"*The following shall be carried out by the Administration prior to reviewing the Coating Technical File for the ship subject to this Standard:*

.1 check that the Technical Data Sheet and Statement of Compliance or Type Approval Certificate comply with this Standard;

.2 check that the coating identification on representative containers is consistent with the coating identified in the Technical Data Sheet and Statement of Compliance or Type Approval Certificate;

.3 check that the inspector is qualified in accordance with the qualification standards in paragraph 6.1.1;

.4 check that the inspector's reports of surface preparation and the coating's application indicate compliance with the manufacturer's Technical Data Sheet and Statement of Compliance or Type Approval Certificate; and

.5 monitor implementation of the coating inspection requirements."

Interpretation

Procedure for verification of application of the PSPC

1 The verification requirements of PSPC 7 should be carried out by the Administration.

2 Monitoring implementation of the coating inspection requirements, as called for in PSPC 7.5 means checking, on a sampling basis, that the inspectors are using the correct equipment, techniques and reporting methods as described in the inspection procedures reviewed by the Administration.

3 Any deviations found under paragraph 2 should be raised initially with the coating inspector, who is responsible for identifying and implementing the corrective actions.

4 In the event that corrective actions are not acceptable to the Administration or in the event that corrective actions are not carried out, then the shipyard should be informed.

5 A Passenger Ship Safety Certificate or Cargo Ship Safety Certificate or Cargo Ship Safety Construction Certificate, as appropriate, should not be issued until all required corrective actions have been carried out to the satisfaction of the Administration.

PSPC ANNEX 1: TEST PROCEDURES FOR COATING QUALIFICATION FOR DEDICATED SEAWATER BALLAST TANK OF ALL TYPES OF SHIPS AND DOUBLE-SIDE SKIN SPACES OF BULK CARRIERS

Annex 1 – Footnotes of standards

"*Footnotes:*

10 Reference standard: ISO 2811-1/4:1997. Paints and varnishes. Determination of density.

11 Reference standards: ISO 4628/2:2003. Paints and varnishes – Evaluation of degradation of coatings – Designation of quantity and size of defects, and of intensity of uniform changes in appearance – Part 2. ISO 4628:2003. Paints and varnishes – Evaluation of degradation of coatings – Designation of quantity and size of common types of defect – Part 3: Designation of degree of rusting.

12 Nine equally distributed measuring points are used on panel's size 150 mm x 150 mm or 15 equally distributed measuring points on panel's size 200 mm x 400 mm.

13 Reference standard: ISO 4624:2002. Pull-off test for adhesion.

14 Reference standards: ASTM D4145:1983. Standard Test Method for Coating Flexibility of Prepainted Sheet.

16 Reference standard: ISO 6270-1:1998. Paints and varnishes – Determination of resistance to humidity – Part 1: Continuous condensation."

Interpretation

Only the footnoted standards referred to in PSPC annex 1 should be applied.

***

ANNEX 3

DRAFT MEPC CIRCULAR

AMENDMENTS TO THE UNIFIED INTERPRETATION TO REGULATION 12.2 OF MARPOL ANNEX I

1 The Marine Environment Protection Committee, at its [sixty-fifth session (13 to 17 May 2013)], approved amendments to the Unified Interpretation to regulation 12.2 of MARPOL Annex I (MEPC.1/Circ.753), as set out in the annex, following the recommendation made by the Sub-Committee on Ship Design and Equipment, at its fifty-seventh session.

2 Member Governments are invited to use the annexed interpretation when applying the relevant provisions of regulation 12.2 of MARPOL Annex I and to bring it to the attention of all parties concerned.

ANNEX

OIL RESIDUE (SLUDGE) TANK DISCHARGE CONNECTIONS TO THE BILGE SYSTEM, OILY BILGE WATER HOLDING TANK(S), TANK TOP OR OILY WATER SEPARATORS (MARPOL 73/78 ANNEX I, REGULATION 12.2)

MARPOL 73/78, Annex I (as amended by resolution MEPC.187(59)), regulation 12.2

"*2 Oil residue (sludge) may be disposed of directly from the oil residue (sludge) tank(s) through the standard discharge connection referred to in regulation 13, or any other approved means of disposal. The oil residue (sludge) tank(s):*

.1 …

.2 ***shall have no discharge connections to the bilge system, oily bilge water holding tank(s), tank top or oily water separators*** *except that the tank(s) may be fitted with drains, with manually operated self-closing valves and arrangements for subsequent visual monitoring of the settled water, that lead to an oily bilge water holding tank or bilge well, or an alternative arrangement, provided such arrangement does not connect directly to the bilge piping system.*"

MARPOL 73/78, Annex I Unified Interpretation to regulation 12.2.2 introduced by MEPC.1/Circ.753

"*2* ***There should be no interconnections between the sludge tank discharge piping and bilge-water piping*** *other than possible common piping leading to the standard discharge connection referred to in regulation 13.*"

Interpretation

1 Screw-down non-return valves arranged in lines connecting to common piping leading to the standard discharge connection required by regulation 13, to prevent sludge from discharging to the bilge system, oily bilge water holding tank(s), tank top or oily water separators, provide a means equivalent to an arrangement that has "no interconnection" or "no discharge connections" as so specified in regulation 12.2 and the Unified Interpretation thereto.

2 It is understood that the common piping may serve only one purpose and that is to connect the discharge lines of the bilge and sludge pumps to the standard discharge connection referred to in regulation 13, or any other approved means of disposal.

***

ANNEX 4

DRAFT MSC CIRCULAR

UNIFIED INTERPRETATIONS ON FALL PREVENTER DEVICES (MSC.1/CIRC.1392 AND MSC.1/CIRC.1327)

1 The Maritime Safety Committee, at its eighty-sixth session (27 May to 5 June 2009), approved Guidelines for the fitting and use of fall preventer devices (FPDs) (MSC.1/Circ.1327) following the recommendations made by the Sub-Committee on Ship Design and Equipment, at its fifty-second session.

2 The Maritime Safety Committee, at its eighty-ninth session (11 to 20 May 2011), approved Guidelines for evaluation and replacement of lifeboat release and retrieval systems (MSC.1/Circ.1392), as per SOLAS regulation III/1.5, following the recommendations made by the Sub-Committee on Ship Design and Equipment, at its fifty-fifth session, and the Ad Hoc Working Group on Lifeboat Release Hooks (16 to 18 March 2011).

3 The Maritime Safety Committee, at its [ninety-second session (…)], approved Unified interpretations on fall preventer devices (MSC.1/Circ.1392 and MSC.1/Circ.1327), providing guidance on the requirements for the strength and testing standards to be applied to FPDs, following the recommendations made by the Sub-Committee on Ship Design and Equipment, at its fifty-seventh session.

4 Member Governments are invited to use the annexed Unified interpretations when applying the provisions of MSC.1/Circ.1392 and MSC.1/Circ.1327 and bring them to the attention of all parties concerned.

ANNEX

FALL PREVENTER DEVICES (MSC.1/CIRC.1392 AND CIRC.1327)

MSC.1/Circ.1392, paragraph 4, states:

> "*Member Governments are strongly urged to ensure that all ships which are fitted with on-load release systems for lifeboats are equipped with fall preventer devices as per paragraph 6 of these Guidelines at the earliest opportunity.*"

MSC.1/Circ.1392, annex, paragraph 6, states:

> "*On each ship, fall preventer devices in accordance with the Guidelines for the fitting and use of fall preventer devices (FPDs) (MSC.1/Circ.1327) should be employed for each existing lifeboat release and retrieval system ...*"

MSC.1/Circ.1327, paragraph 2, states:

> "*The use of FPDs should be considered as an interim risk mitigation measure, only to be used in connection with existing on-load release hooks, at the discretion of the master, pending the wide implementation of improved hook designs with enhanced safety features.*"

Interpretation

1 Where locking pins are provided as an FPD, the pins should be designed so that they have a minimum factor of safety of 6 as per the LSA Code, paragraph 6.1.1.6. Where existing on-load release hooks are drilled to provide a locking pin insertion point, the strength of the hooks should continue to satisfy the relevant requirements in the LSA Code and in the *Revised recommendation on testing of life-saving appliances* (resolution MSC.81(70), part 2, paragraph 5.3.1) and should comply with the requirements of the *Guidelines for the fitting and use of fall preventer devices (FPDs)* (MSC.1/Circ.1327, paragraph 2.1). The modification of the hook in this respect should be acceptable to the manufacturer of the hook.

2 Where strops or slings with fittings (e.g. shackles) are used as an FPD, the following test requirements should be considered:

.1 environment tests as set out in resolution MSC.81(70), part 1, paragraph 1.2.1 or equivalent;

.2 tests for rot-proof, colour-fast and resistant to deterioration from exposure to sunlight and that they are not unduly affected by seawater, oil or fungal attack as set out in resolution MSC 81(70), part 1, paragraph 2.4, or equivalent;

.3 prototype test to a factor of safety of 6; and

.4 a factory acceptance test of 2.2 x SWL.

Note: The factor of safety should be based upon the SWL, which should be not less than the total weight of the lifeboat when loaded with its full complement of persons and equipment.

3 It is the responsibility of the lifeboat and davit manufacturer to confirm that the attachment eye is suitable for the use of the proposed FPD. If the lifeboat and/or davit manufacturer is no longer available, the suitability should be determined by an independent service provider.

***

ANNEX 5

DRAFT MSC CIRCULAR

UNIFIED INTERPRETATIONS OF SOLAS REGULATION II-1/26.3

1 The Maritime Safety Committee, at its [ninety-second session (…)], approved Unified interpretations of SOLAS regulation II-1/26.3, providing an interpretation for the arrangement of fuel pumps to provide sufficient capacity for normal operation of propulsion machinery, even if one pump becomes inoperable while using marine fuels with a sulphur content not exceeding 0.1 per cent/m/m and minimum viscosity of 2 cSt, as required in Emission Control Areas from 1 January 2015, following the recommendations made by the Sub-Committee on Ship Design and Equipment, at its fifty-seventh session.

2 Member Governments are invited to use the annexed Unified interpretations when applying the requirements of SOLAS regulation II-1/26.3 and bring them to the attention of all parties concerned.

ANNEX

FUEL PUMP ARRANGEMENT REQUIRED FOR SHIPS TO MAINTAIN NORMAL OPERATION OF PROPULSION MACHINERY WHEN OPERATING IN EMISSION CONTROL AREAS AND NON-RESTRICTED AREAS

SOLAS regulation II-I/26.3 (partially)

"*Means shall be provided whereby normal operation of propulsion machinery can be sustained or restored even though one of the essential auxiliaries becomes inoperative. Special consideration shall be given to the malfunctioning of:*

…

.4 the fuel oil supply systems for boilers or engines;

…"

Interpretation

For ships intending to use Heavy Fuel Oil (HFO) or Marine Diesel Oil (MDO) in non-restricted areas and marine fuels with a sulphur content not exceeding 0.1 per cent/m/m and minimum viscosity of 2 cSt in emission control areas, the following arrangements should be considered to be in compliance with SOLAS regulation II-I/26.3.4:

.1 in non-restricted areas, ships provided with two (2) fuel oil pumps that can each supply the fuel primarily used by the ship (i.e. HFO or MDO) in the required capacity for normal operation of the propulsion machinery; and

.2 in emission control areas one of the following configurations:

.1 fuel oil pumps as in .1, provided these are each suitable for marine fuels with a sulphur content not exceeding 0.1 per cent/m/m and minimum viscosity of 2 cSt operation at the required capacity for normal operation of propulsion machinery;

.2 when the fuel oil pumps in .1 are suitable to operate on marine fuels with a sulphur content not exceeding 0.1 per cent/m/m and minimum viscosity of 2 cSt but one pump alone is not capable of delivering marine fuels with a sulphur content not exceeding 0.1 per cent/m/m and minimum viscosity of 2 cSt at the required capacity, then both pumps may operate in parallel to achieve the required capacity for normal operation of propulsion machinery. In this case, one additional (third) fuel oil pump should be provided. The additional pump should, when operating in parallel with one of the pumps in .1, be suitable for and capable of delivering marine fuels with a sulphur content not exceeding 0.1 per cent/m/m and minimum viscosity of 2 cSt at the required capacity for normal operation of the propulsion machinery; and

.3 in addition to .1, two separate fuel oil pumps should be provided, each capable of and suitable for supplying marine fuels with a sulphur content not exceeding 0.1 per cent/m/m and minimum viscosity of 2 cSt at the required capacity for normal operation of propulsion machinery.

Notes:

1 For the purpose of this interpretation, if a marine distillate grade fuel with a different maximum sulphur content is specified by regulation for the area of operation of the ship (e.g. ECA, specific ports or local areas, etc.) then that maximum should be applied.

2 IACS UR35.4.1 (automatic start of standby pumps) applies independent of the pump arrangement for ships holding the class notation for unattended machinery space.

3 Where electrical power is required for the operation of propulsion machinery, the requirements should also be applicable for machinery for power generation when such machinery is supplied by common fuel supply pumps.

***

ANNEX 6

DRAFT MSC CIRCULAR

UNIFIED INTERPRETATIONS OF PARAGRAPH 1.1.4 OF THE LSA CODE

1 The Maritime Safety Committee, at its [ninety-second session (…)], approved Unified interpretations of paragraph 1.1.4 of the International Life-saving Appliances (LSA) Code, concerning the greatest launching height for a free-fall lifeboat (LSA Code, as amended by resolution MSC.218(82)) relating to SOLAS regulation III/3.13, following the recommendations made by the Sub-Committee on Ship Design and Equipment, at its fifty-seventh session.

2 Member Governments are invited to use the annexed Unified interpretations when applying the requirements of paragraph 1.1.4 of the LSA Code and bring them to the attention of all parties concerned.

ANNEX

GREATEST LAUNCHING HEIGHT FOR A FREE-FALL LIFEBOAT (LSA CODE, PARAGRAPH 1.1.4)

LSA Code, paragraph 1.1.4 (Free-fall certification height):

"*Free-fall certification height is the greatest launching height for which the lifeboat is to be approved, measured from the still water surface to the lowest point on the lifeboat when the lifeboat is in the launch configuration.*"

LSA Code, section 4.7.3 (Performance requirements):

"*4.7.3.1 Each free-fall lifeboat shall make positive headway immediately after water entry and shall not come into contact with the ship after a free-fall launching against a trim of up to 10° and a list of up to 20° either way from the certification height when fully equipped and loaded …*

4.7.3.2 For oil tankers, chemical tankers and gas carriers with a final angle of heel greater than 20° calculated in accordance with the International Convention for the Prevention of Pollution from Ships, 1973, as modified by the Protocol of 1978 relating thereto, and the recommendations of the Organization, as applicable, a lifeboat shall be capable of being free-fall launched at the final angle of heel and on the base of the final waterline of that calculation.*"

LSA Code, paragraph 6.1.1.1 (Launching and embarkation appliances):

"*With the exception of the secondary means of launching for free-fall lifeboats, each launching appliance shall be so arranged that the fully equipped survival craft or rescue boat it serves can be safely launched against unfavourable conditions of trim of up to 10° and a list of up to 20° either way …*"

LSA Code, paragraph 6.1.4.4 (Launching appliances for free-fall lifeboats):

"*The launching appliance shall be designed and arranged so that in its ready to launch position, the distance from the lowest point on the lifeboat it serves to the water surface with the ship in its lightest seagoing condition does not exceed the lifeboat's free-fall certification height, taking into consideration the requirements of paragraph 4.7.3.*"

SOLAS regulation III/3.13 (Lightest seagoing condition):

"*Lightest seagoing condition is the loading condition with the ship on even keel, without cargo, with 10 per cent stores and fuel remaining and in the case of a passenger ship with the full number of passengers and crew and their luggage.*"

Interpretation

1 The "greatest launching height" of a free-fall lifeboat should be determined based on the lightest seagoing condition as defined in SOLAS regulation III/3.13.

2 The "water surface" used in determining the distance referred to in paragraph 6.1.4.4 of the LSA Code is the waterline typically associated with the lightest seagoing condition as defined in SOLAS regulation III/3.13.

3 The trim and heel conditions in paragraph 6.1.1.1 of the LSA Code and in the phrase "taking into consideration the requirements of paragraph 4.7.3" in paragraph 6.1.4.4 of the Code should be used only to determine the ability of the lifeboat to be safely launched within the operational capabilities of the equipment and without contacting the ship under the specified conditions and not in the determination of the "greatest launching height".

***

ANNEX 7

DRAFT MSC RESOLUTION

ADOPTION OF THE REQUIREMENTS FOR PERIODIC SERVICING AND MAINTENANCE OF LIFEBOATS AND RESCUE BOATS, LAUNCHING APPLIANCES AND RELEASE GEAR

THE MARITIME SAFETY COMMITTEE,

RECALLING Article 28(b) of the Convention on the International Maritime Organization concerning the functions of the Committee,

RECALLING ALSO the Measures to prevent accidents with lifeboats (MSC.1/Circ.1206/Rev.1) and the Interim recommendation on conditions for authorization of service providers for lifeboats, launching appliances and on-load release gear (MSC.1/Circ.1277) approved by it,

RECOGNIZING the need to establish a uniform, safe and documented standard for periodic servicing and maintenance of lifeboats (including free-fall lifeboats) and rescue boats (including fast rescue boats), launching appliances and release gear,

NOTING that, by resolution MSC.[…(…)], it adopted amendments to regulations III/3 and III/20 of the International Convention for the Safety of Life at Sea (SOLAS), 1974, as amended (hereinafter referred to as "the Convention"), concerning periodic servicing of lifeboats and rescue boats, launching appliances and release gear,

NOTING ALSO that the aforementioned regulation III/20 of the Convention provides that the periodic servicing and maintenance shall be carried out in accordance with the Requirements for periodic servicing and maintenance of lifeboats and rescue boats, launching appliances and release gear (hereinafter referred to as "the Requirements"),

HAVING CONSIDERED, at its [ninety-second] session, the recommendation made by the Sub-Committee on Ship Design and Equipment, at its fifty-seventh session,

1. ADOPTS the Requirements for periodic servicing and maintenance of lifeboats and rescue boats, launching appliances and release gear, the text of which is set out in the annex to the present resolution;

2. INVITES Contracting Governments to the Convention to note that the Requirements will take effect on [date] upon entry into force of the associated amendments to regulations III/3 and III/20 of the Convention;

3. ALSO INVITES Contracting Governments to the Convention to take measures they consider appropriate to ensure that national manufacturers of equipment certified under chapter III of the Convention for installation and use on board ships undertake to ensure that equipment, instructions, specialized tools, spare parts, training and accessories, as required, are available to independent service providers in a timely and cost-effective manner;

4. REQUESTS the Secretary-General to transmit certified copies of this resolution and the text of the Requirements, contained in the annex, to all Contracting Governments to the Convention;

5. ALSO REQUESTS the Secretary-General to transmit copies of this resolution and the annex to all Members of the Organization which are not Contracting Governments to the Convention.

REQUIREMENTS FOR PERIODIC SERVICING AND MAINTENANCE OF LIFEBOATS AND RESCUE BOATS, LAUNCHING APPLIANCES AND RELEASE GEAR

1 GENERAL

1.1 The objective of these Requirements for periodic servicing and maintenance of lifeboats and rescue boats, launching appliances and release gear (the Requirements) is to establish a uniform, safe and documented standard for periodic servicing and maintenance of the equipment specified in paragraph 2.1.

1.2 The detailed procedures covered by these Requirements are provided in section 6.

1.3 These Requirements relate to the following regulations:

.1 SOLAS regulation III/20 – Operational readiness, maintenance and inspections; and

.2 SOLAS regulation III/36 – Instructions for onboard maintenance.

1.4 The Company* shall ensure that servicing and maintenance on board its ships is conducted in accordance with SOLAS regulation III/20 and shall establish and implement health, safety and environment (HSE) procedures covering all activities during servicing and maintenance.

1.5 The personnel carrying out servicing and maintenance as described in paragraph 4.2 shall be certified in accordance with the requirements specified in section 8 and shall comply with health, safety and environment (HSE) instructions and procedures of the Company.

2 APPLICATION

2.1 These Requirements shall apply to the periodic servicing and maintenance of:

.1 lifeboats (including free-fall lifeboats), rescue boats and fast rescue boats; and

.2 launching appliances and on-load and off-load release gear for lifeboats (including primary and secondary means of launching appliances for free-fall lifeboats), rescue boats, fast rescue boats and davit launched liferafts.

2.2 For the purpose of these Requirements:

.1 *Equipment* means the aforementioned equipment to which the Requirements apply.

.2 *Off-load release mechanism* means a release mechanism which releases the life/rescue boat when it is waterborne or when there is no load on the hooks.

* For the purpose of these Requirements, Company is as defined in SOLAS regulation IX/1.2.

.3 *On-load release mechanism* means a release mechanism which releases the lifeboat with load on the hooks.

3 AUTHORIZATION

3.1 Administrations shall ensure that the thorough examination, operational testing, repair and overhaul of equipment shall be carried out in accordance with SOLAS regulation III/20 by service providers authorized by them that are qualified in these operations for each make and type of equipment for which they provide the service.

3.2 Service providers carrying out the thorough examination, operational testing, repair and overhaul of equipment shall be authorized for each make and type of equipment in accordance with section 7.

4 QUALIFICATION LEVELS AND CERTIFICATION

4.1 Weekly and monthly inspections and routine maintenance as specified in the equipment maintenance manual(s), may be carried out by the shipboard personnel and shall be conducted under the direct supervision of a senior ship's officer in accordance with the maintenance manual(s).

4.2 All other inspections, servicing and repair shall be conducted by personnel appropriately trained and certified for the work to be done in accordance with section 8.

4.3 Where these Requirements call for certification of servicing personnel, such certification shall be issued by the service provider in accordance with an established system for training and certification in accordance with paragraph 8.

5 REPORTS AND RECORDS

5.1 All reports and checklists shall be correctly filled out and signed by the person who carries out the inspection and maintenance work and shall also be signed by the company's representative or the ship's master.

5.2 Records of inspections, servicing, repairs and maintenance shall be updated and filed on board the ship.

5.3 When repairs, thorough examinations and annual servicing are completed, a statement confirming that the lifeboat arrangements remain fit for purpose shall be promptly issued by the service provider who performed the work.

6 SPECIFIC PROCEDURES FOR MAINTENANCE AND SERVICING

6.1 General

6.1.1 Any inspection, servicing and repair shall be carried out according to the maintenance manuals and associated technical documentation developed by the manufacturer or an alternative body authorized in accordance with section 7.

6.1.2 A full set of maintenance manuals and associated technical documentation as specified in paragraph 6.1.1 shall be available on board for use in all operations involved in the inspection, maintenance, adjustment and re-setting of the lifeboat and associated equipment, such as davits and release gear.

6.1.3 The maintenance manuals and associated technical documentation as specified in paragraph 6.1.1 shall include the items listed in sections 6.2 to 6.4 as a minimum and shall be periodically reviewed and updated as necessary.

6.2 Annual thorough examination

6.2.1 All items listed in checklists for the weekly/monthly inspections also form the first part of the annual thorough examination; when carrying out this examination, the inspection of these items shall be performed by the ship's crew in the presence of the manufacturer's representative or other person appropriately trained and certified for the work to be done in accordance with section 8.

6.2.2 Inspection and maintenance records of inspections and routine maintenance carried out by the ship's crew and the applicable certificates for the launching appliances and equipment shall be available.

[6.2.3 If the annual examination and checks required in paragraphs 6.2.4 to 6.2.7 cannot be carried out for practical reasons, the Administration may allow an extension which normally should not be longer than three months from the due date.]

6.2.4 For lifeboats (including free-fall lifeboats), rescue boats and fast rescue boats, the following items shall be examined and checked for satisfactory condition and operation:

.1 condition of the boat structure including fixed and loose equipment (including a visual examination of the external boundaries of the void spaces, as far as practicable);

.2 engine and propulsion system;

.3 sprinkler system, where fitted;

.4 air supply system, where fitted;

.5 manoeuvring system;

.6 power supply system;

.7 bailing system;

.8 fender/skate arrangements; and

.9 rescue boat righting system, where fitted.

6.2.5 For release gear of lifeboats (including free-fall lifeboats), rescue boats, fast rescue boats and liferafts, the following shall be examined for satisfactory condition* and operation after the annual winch brake test with the empty boat or equivalent load, as required by paragraph 6.3.1:

* Hanging-off pennants may be used for this purpose but should not remain connected at other times, such as when the lifeboat is normally stowed and during training exercises. The release gear is to be examined prior to its operational test. The release gear is to be re-examined after its operational test and the dynamic winch brake test. Special consideration shall be given to ensure that no damage has occurred during the winch brake test, especially to the hook fastening.

.1 operation of devices for activation of release gear;

.2 excessive free play (tolerances);

.3 hydrostatic interlock system, where fitted;

.4 cables for control and release; and

.5 hook fastening.

Notes: 1 The setting and maintenance of release gear are critical operations with regard to maintaining the safe operation of lifeboats (including free-fall lifeboats), rescue boats, fast rescue boats and davit launched liferafts. Utmost care shall be taken when carrying out all inspection and maintenance operations on the equipment.

2 No maintenance or adjustment of the release gear shall be undertaken while the hooks are under load.

6.2.6 The operational test of davit-launched lifeboats' and rescue boats' on-load release function shall be carried out as follows:

.1 position the boat partially in the water such that the mass of the boat is substantially supported by the falls and the hydrostatic interlock system, where fitted, is not triggered;

.2 operate the on-load release gear;

.3 reset the on-load release gear; and

.4 examine the release gear and hook fastening to ensure that the hook is completely reset and no damage has occurred.

6.2.7 The operational test of davit-launched lifeboats' and rescue boats' off-load release function shall be carried out as follows:

.1 position the boat so that it is fully waterborne;

.2 operate the off-load release gear;

.3 reset the off-load release gear; and

.4 recover the boat to the stowed position and prepare for operational readiness.

During the test, prior to hoisting, it shall be checked that the release gear is completely and properly reset. The final turning-in of the boat shall be done without any persons on board.

6.2.8 The operational test of the free-fall lifeboat release function shall be carried out as follows:

.1 engage the arrangements for the test without launching the lifeboat, required by paragraph 4.7.6.4 of the LSA Code, as specified in the manufacturer's operating instructions;

.2 ensure that the operator is properly seated and secured in the seat location from which the release mechanism is to be operated;

.3 operate the release mechanism to release the lifeboat;

.4 reset the lifeboat in the stowed configuration;

.5 repeat the procedures referred to in .2 to .4 above, using the back-up release mechanism, if applicable;

.6 remove the arrangements for the test without launching the lifeboat, required by paragraph 4.7.6.4 of the LSA Code; and

.7 verify that the lifeboat is in the ready to launch stowed configuration.

6.2.9 The operational test of the davit-launched liferaft automatic release function shall be carried out as follows:

.1 manually release the hook with a load of 150 kg on the hook;

.2 automatically release the hook with a dummy weight of 200 kg on the hook when it is lowered to the ground; and

.3 examine the release hook and hook fastening to ensure that the hook is completely reset and no damage has occurred.

If a raft is used for the test instead of a dummy weight, the automatic release function shall release the raft when waterborne.

6.2.10 For davits for lifeboats (including free-fall lifeboats), rescue boats, fast rescue boats and liferafts, the following items shall be examined for satisfactory condition and operation:

.1 davit structure, in particular with regard to corrosion, misalignments, deformation and excessive free play;

.2 wires and sheaves, possible damages such as kinks and corrosion;

.3 lubrication of wires, sheaves and moving parts; and

.4 if applicable:

.1 functioning of limit switches;

.2 stored power systems; and

.3 hydraulic systems.

6.2.11 For winches for lifeboats (including free-fall lifeboats), rescue boats, fast rescue boats and liferafts, the following items shall be examined for satisfactory condition and operation:

.1 inspecting brake system and opening the brake where possible;

.2 replacing brake pads, if necessary;

.3 winch foundation; and

.4 if applicable:

.1 remote control system; and

.2 power supply system.

6.3 Dynamic brake test of winches for lifeboats (including free-fall lifeboats), rescue boats, fast rescue boats and liferafts

6.3.1 Annual operational testing shall be done by lowering the empty craft or equivalent load. When the craft has reached its maximum lowering speed and before the craft enters the water, the brake shall be abruptly applied.

6.3.2 The five-year operational test shall be done by lowering the craft loaded to a proof load equal to 1.1 times the weight of the craft and its full complement of persons and equipment, or equivalent load. When the craft has reached its maximum lowering speed and before the craft enters the water, the brake shall be abruptly applied.

6.3.3 Following these tests, the stressed structural parts shall be re-inspected* where possible.

6.4 Overhaul of release gear for lifeboats (including free-fall lifeboats), rescue boats, fast rescue boats and liferafts

The overhaul of release gear shall include:

.1 dismantling of hook release units;

.2 examinations with regard to tolerances and design requirements;

.3 adjustment of release gear system after assembly;

.4 operational tests as per above and with a load according to SOLAS regulations III/20.11.2.3 and III/20.11.3.3; and

.5 examinations of vital parts with regard to defects and cracks**.

7 CONDITIONS FOR AUTHORIZATION OF SERVICE PROVIDERS FOR LIFEBOATS (INCLUDING FREE-FALL LIFEBOATS), RESCUE BOATS AND FAST RESCUE BOATS, LAUNCHING APPLIANCES AND RELEASE GEAR

7.1 Authorization as required by paragraph 3.2 shall include, as a minimum:

.1 employment and documentation of personnel certified in accordance with a recognized national, international or industry standard as applicable, or an equipment manufacturer's established certification programme. In either case, the certification programme shall comply with section 8 for each make and type of equipment for which service is to be provided;

---

* In loading the craft for this test, precautions should be taken to ensure that the stability of the craft is not adversely affected by free surface effects or the raising of the centre of gravity.

** Non-destructive examination (NDE) techniques, such as dye penetrants (DPE), may be suitable.

.2 availability of sufficient tools, and in particular any specialized tools specified in the equipment manufacturer's instructions, including portable tools as needed for work to be carried out on board ship;

.3 access to appropriate parts and accessories as specified for repairing lifeboats (including free-fall lifeboats), rescue boats and fast rescue boats, launching appliances and release gear, as applicable;

.4 for servicing and repair work involving disassembly or adjustment of on-load release mechanisms and davit's winch, availability of the equipment manufacturer's instructions; and

.5 a documented and duly certified quality system, which covers at least the following:

.1 code of conduct for personnel involved in the relevant activity;

.2 maintenance and calibration of equipment;

.3 training programmes for personnel;

.4 supervision and verification to ensure compliance with operational procedures;

.5 recording and reporting of information;

.6 quality management of subsidiaries and agents;

.7 job preparation; and

.8 periodic review of work process procedures, complaints, corrective actions and issuance, maintenance and control of documents.

Note: A documented quality system complying with the most current version of the ISO 9000 series and including the above items would be considered acceptable.

7.2 Administrations shall arrange for regular inspections of service providers to ensure that work continues to be carried out based on these Requirements, and shall withdraw the authorization of service providers who are not in compliance. For service providers situated in other countries, the Administration may accept or recognize service providers authorized, checked or inspected by surveyors nominated for the purpose or by recognized organizations or by other SOLAS Contracting Governments.

7.3 Administrations shall ensure that information regarding authorized service providers for equipment is made available to mariners.

7.4 Administrations may authorize service providers other than equipment manufacturers on the basis of prior authorization for the equipment and/or demonstrated expertise as an authorized service provider.

7.5 The requirements in this section shall apply equally to manufacturers when they are acting as service providers.

8 REQUIREMENTS FOR CERTIFICATION OF PERSONNEL FOR SERVICING AND MAINTENANCE OF LIFEBOATS (INCLUDING FREE-FALL LIFEBOATS), RESCUE BOATS AND FAST RESCUE BOATS, LAUNCHING APPLIANCES AND RELEASE GEAR

8.1 Personnel for the work specified in paragraph 4.2 shall be certified by a service provider in accordance with a certification programme in accordance with the following provisions.

8.2 Education and training

8.2.1 Education and training for initial certification of personnel shall be issued only to personnel having a qualification or demonstrated expertise. The specific training shall address, as a minimum:

.1 relevant rules and regulations, including international conventions;

.2 design and construction of lifeboats (including free-fall lifeboats), rescue boats and fast rescue boats, including on-load release gear and launching appliances;

.3 causes of lifeboat and rescue boat accidents;

.4 education and practical training in the procedures specified in section 6 for which certification is sought;

.5 detailed procedures for thorough examination, operational testing, repair and overhaul of lifeboat (including free-fall lifeboats), rescue boats and fast rescue boats, launching appliances and on-load release gear, as applicable;

.6 procedures for issuing a report of service and statement of fitness for purpose based on paragraph 5.3; and

.7 work, health and safety issues while conducting activities on board.

8.2.2 The education and training for the personnel shall include practical technical training on actual inspection and maintenance using the equipment for which the personnel are to be certified. The technical training shall include disassembly, reassembly, correct operation and adjustment of the equipment. Classroom training shall be supplemented by field experience in the operations for which certification is sought, under the supervision of an experienced senior certified person.

8.2.3 Prior to issuance of certification, a competency assessment shall be satisfactorily completed, using the equipment for which the personnel are to be certified.

8.3 Terms of validity of certificates and update training

8.3.1 Upon completion of training and competency assessment, a certificate shall be issued defining the level of qualification and the scope of the certification (e.g. makes and types of equipment). The expiry date shall clearly be written on the certificate. The expiry date shall be within three years from the date of issuance of the certificate.

8.3.2 A competency assessment, and refresher training as appropriate, on the basis of that assessment, shall be conducted to renew the certification.

***

ANNEX 8

DRAFT MSC CIRCULAR

GUIDELINES ON SAFETY DURING ABANDON SHIP DRILLS USING LIFEBOATS

1 The Maritime Safety Committee, at its eighty-first session (10 to 19 May 2006), recalled that, at its seventy-ninth session (1 to 10 December 2004), it had endorsed the intention of the Sub-Committee on Ship Design and Equipment, in cooperation with the Sub-Committee on Standards of Training and Watchkeeping, to develop further guidance as envisioned in MSC/Circ.1049 (Accidents with lifeboats) and, accordingly, approved the *Guidance on safety during abandon ship drills using lifeboats* (MSC/Circ.1136).

2 The Committee further recalled that the Guidance developed for lifeboats has relevance, in general, for emergency drills with other life-saving systems and should be taken into account when such drills are conducted. In connection with MSC/Circ.1136, and recognizing the need to provide a basic outline of essential steps to safely carry out simulated launching of free-fall lifeboats in accordance with SOLAS regulation III/19.3.3.4, and having considered proposals made by the Sub-Committee on Ship Design and Equipment, at its forty-seventh session, the Committee further approved the *Guidelines for simulated launching of free-fall lifeboats* (MSC/Circ.1137).

3 Having considered the need to update the above Guidance and Guidelines, and having considered proposals made by the Sub-Committee on Fire Protection, at its fiftieth session, to consolidate the numerous circulars on the subject of measures to prevent accidents with lifeboats in order to better serve the mariner, the Committee, at its eighty-first session, approved the *Guidelines on safety during abandon ship drills using lifeboats*, as set out in annex 2 to the *Measures to prevent accidents with lifeboats* (MSC.1/Circ.1206/Rev.1).

4 The Committee, [at its […] session [date]], agreed to the present new Guidelines on safety during abandon ship drills using lifeboats, following the amalgamation of annex 1 to the Measures to prevent accidents with lifeboats (MSC.1/Circ.1206/Rev.1) and the *Interim Recommendation on conditions for authorization of service providers for lifeboats, launching appliances and on-load release gear* (MSC.1/Circ.1277) in the Requirements for periodic servicing and maintenance of lifeboats and rescue boats, launching appliances and release gear (resolution MSC.…(…)).

5 Member Governments are invited to give effect to the annexed Guidelines and to bring them to the attention of shipowners, ship operators, ship-vetting organizations, ship personnel, surveyors, manufacturers and all other parties concerned.

6 MSC.1/Circ.1206/Rev.1 is superseded by this circular and resolution MSC.…(…).

ANNEX

GUIDELINES ON SAFETY DURING ABANDON SHIP DRILLS USING LIFEBOATS

1 GENERAL

1.1 Introduction

1.1.1 It is essential that seafarers are familiar with the life-saving appliances on board their ships and that they have confidence that the appliances provided for their safety will work and will be effective in an emergency. Frequent periodic shipboard drills are necessary to achieve this.

1.1.2 Crew training is an important component of drills. As a supplement to initial shore-based training, onboard drills and training will familiarize crew members with the ships' appliances and the associated procedures. The objective of drill and training is to develop appropriate crew competencies, enabling effective and safe utilization of the equipment required by the 1974 SOLAS Convention (SOLAS). The time limits set out in SOLAS for ship abandonment should be considered as a secondary objective when conducting drills.

1.2 Drill frequency

Experience has shown that holding frequent drills makes the crew more familiar with the life-saving appliances on board their ships and increases their confidence that the appliances will work and will be effective in an emergency. Drills give the opportunity to gain experience in the use of the safety equipment in cooperation. The ability to cope with an emergency and handle the situation is improved by frequent drills. However, frequent crew changes sometimes make it difficult to ensure that all on board have the opportunity to participate in drills when the minimum required drills are conducted only. Therefore, consideration needs to be given to scheduling drills as necessary to ensure all on board have an early opportunity to become familiar with the appliances and systems on board.

1.3 Drills must be safe

1.3.1 Abandon ship drills should be planned, organized and performed so that the recognized risks are minimized and in accordance with relevant shipboard requirements of occupational safety and health.

1.3.2 Drills provide an opportunity to verify that the life-saving appliances are working and that all associated equipment is in place and in good working order, ready for use.

1.3.3 Before conducting drills, it should be checked that the lifeboat and its equipment have been maintained in accordance with the ship's maintenance manuals and any associated technical documentation, as well as noting all the precautionary measures necessary. Abnormal conditions of wear and tear or corrosion should be reported to the responsible officer immediately.

1.4 Emphasis on learning

Drills should be conducted with an emphasis on learning and be viewed as a learning experience, not just as a task to meet a regulatory requirement to conduct drills. Whether they are emergency drills required by SOLAS or additional special drills conducted to enhance the competence of the crew members, they should be carried out at safe speed.

During drills, care should be taken to ensure that everybody familiarizes themselves with their duties and with the equipment. If necessary, pauses should be made during the drills to explain especially difficult elements. The experience of the crew is an important factor in determining how fast a drill or certain drill elements should be carried out.

1.5 Planning and organizing drills

1.5.1 SOLAS requires that drills shall, as far as practicable, be conducted as if there was an actual emergency[1]. This means that the entire drill should, as far as possible, be carried out. The point is that, at the same time, it should be ensured that the drill can be carried out in such a way that it is safe in every respect. Consequently, elements of the drill that may involve unnecessary risks need special attention or may be excluded from the drill.

1.5.2 In preparing for a drill, those responsible should review the manufacturer's instruction manual to ensure that a planned drill is conducted properly. Those responsible for the drill should ensure that the crew is familiar with the guidance provided in the life-saving appliances instruction manuals.

1.5.3 Lessons learned in the course of a drill should be documented and made a part of follow-up shipboard training discussions and planning the next drill session.

1.5.4 The lowering of a boat with its full complement of persons is an example of an element of a drill that may, depending on the circumstances, involve an unnecessary risk. Such drills should only be carried out if special precautions are observed.

2 ABANDON SHIP DRILLS

2.1 Introduction

It is important that the crew who operate safety equipment on board is familiar with the functioning and operation of such equipment. SOLAS requires that sufficiently detailed manufacturers' training manuals and instructions be carried on board, which should be easily understood by the crew. Such manufacturers' manuals and instructions should be accessible for everyone on board and observed and followed closely when preparing and conducting drills.

2.2 Guidance to the shipowner

2.2.1 The shipowner should ensure that new safety equipment on board the company's ships has been approved and installed in accordance with the provisions of SOLAS and the International Life-Saving Appliances (LSA) Code.

2.2.2 Procedures for holding safe drills should be included in the Safety Management System (SMS) of the shipping companies. Detailed procedures for elements of drills that involve a special risk should be evident from workplace assessments adjusted to the relevant life-saving appliance.

2.2.3 Personnel carrying out maintenance and repair work on lifeboats should be qualified accordingly[2].

---

1 Refer to SOLAS regulation III/19.3.1.

2 Refer to the Requirements for periodic servicing and maintenance of lifeboats and rescue boats, launching appliances and release gear, adopted by resolution MSC....(…).

2.3 Lifeboats lowered by means of falls

2.3.1 During drills, everyone participating should be alert for potentially dangerous conditions or situations and should bring them to the attention of the responsible person for appropriate action. Feedback and recommendations to the shipowner, the Administration and the system manufacturer are important elements of the marine safety system.

2.3.2 When drills are to be performed with persons on board the lifeboat, it is recommended that the boat be lowered and recovered without any persons on board first to ascertain that the arrangement functions correctly. In this case, the boat should then be lowered into the water with only the number of persons on board necessary to operate the boat[3].

2.3.3 To prevent lashings or gripes from getting entangled, proper release should be checked before swinging out the davit.

2.4 Free-fall lifeboats

2.4.1 The monthly drills with free-fall lifeboats should be carried out according to the manufacturer's instructions, so that the persons who are to enter the boat in an emergency are trained to embark the boat, to take their seats in a correct way and to use the safety belts; and also are instructed on how to act during launching into the sea.

2.4.2 When the lifeboat is free-fall launched as part of a drill, this should be carried out with the minimum personnel required to manoeuvre the boat in the water and to recover it. The recovery operation should be carried out with special attention, bearing in mind the high-risk level of this operation. Where permitted by SOLAS[4], simulated launching should be carried out in accordance with the manufacturer's instructions, taking due note of the Guidelines for simulated launching of free-fall lifeboats, set out in the appendix.

[3] Refer to MSC.1/Circ.1326 and Corr.1, "Clarification of SOLAS regulation III/19".
[4] Refer to SOLAS regulation III/20.11.2.4.

APPENDIX

GUIDELINES FOR SIMULATED LAUNCHING OF FREE-FALL LIFEBOATS

1 DEFINITION

Simulated launching is a means of training the crew in the free-fall release procedure of free-fall lifeboats and in verifying the satisfactory function of the free-fall release system without allowing the lifeboat to fall into the sea.

2 PURPOSE AND SCOPE

The purpose of these Guidelines is to provide a basic outline of essential steps to safely carry out simulated launching. These Guidelines are general; the lifeboat manufacturer's instruction manual should always be consulted before conducting simulated launching. Simulated launching should only be carried out with lifeboats and launching appliances designed to accommodate it, and for which the manufacturer has provided instructions. Simulated launching should be carried out under the supervision of a responsible person who should be an officer experienced in such procedures.

3 TYPICAL SIMULATED LAUNCHING SEQUENCE

3.1 Check equipment and documentation to ensure that all components of the lifeboat and launching appliance are in good operational condition.

3.2 Ensure that the restraining device(s) provided by the manufacturer for simulated launching are installed and secure and that the free-fall release mechanism is fully and correctly engaged.

3.3 Establish and maintain good communication between the assigned operating crew and the responsible person.

3.4 Disengage lashings, gripes, etc., installed to secure the lifeboat for sea or for maintenance, except those required for simulated free-fall.

3.5 Participating crew board the lifeboat and fasten their seatbelts under the supervision of the responsible person.

3.6 All crew, except the assigned operating crew, disembark the lifeboat. The assigned operating crew fully prepares the lifeboat for free-fall launch and secures themselves in their seats for the release operation.

3.7 The assigned operating crew activates the release mechanism when instructed by the responsible person. Ensure that the release mechanism operates satisfactorily and, if applicable, the lifeboat travels down the ramp to the distance specified in the manufacturer's instructions.

3.8 Re-secure the lifeboat to its stowed position, using the means provided by the manufacturer and ensure that the free-fall release mechanism is fully and correctly engaged.

3.9 Repeat procedures from paragraph 3.7 above, using the back-up release mechanism when applicable.

3.10 The assigned operating crew disembarks the lifeboat.

3.11 Ensure that the lifeboat is returned to its normal stowed condition. Remove any restraining and/or recovery devices used only for the simulated launch procedure.

***

ANNEX 9

DRAFT AMENDMENTS TO SOLAS CHAPTER III

Regulation 3 – Definitions

1 The following new paragraph 25 is added after the existing paragraph 24:

"25 *Requirements for periodic servicing and maintenance* means the Requirements for periodic servicing and maintenance of lifeboats and rescue boats, launching appliances and release gear, adopted by the Maritime Safety Committee of the Organization by resolution MSC.[…(…)], as may be amended by the Organization, provided that such amendments are adopted, brought into force and take effect in accordance with the provisions of article VIII of the present Convention concerning the amendment procedures applicable to the annex other than chapter I."

Regulation 20 – Operational readiness, maintenance and inspections

2 In paragraph 3.1, the words "based on the guidelines developed by the Organization and" are deleted.

3 The heading of paragraph 11 is replaced by the following:

"11 Periodic servicing of lifeboats, rescue boats and fast rescue boats, launching appliances and release gear"

4 Paragraph 11.2 is replaced by the following:

"11.2 Lifeboat or rescue boat release gear, including fast rescue boat release gear and free-fall lifeboat release systems, shall be:

.1 maintained in accordance with instructions for on-board maintenance as required by regulation 36;

.2 subject to a thorough examination and operational test during the annual surveys required by regulations I/7 and I/8 by properly trained personnel familiar with the system;

.3 in case of on-load release gear, operationally tested under a load of 1.1 times the total mass of the boat when loaded with its full complement of persons and equipment whenever the release gear is overhauled. Such overhauling and test shall be carried out at least once every five years*; and

* Refer to the *Recommendation on testing of life-saving appliances*, adopted by the Organization by resolution A.689(17). For life-saving appliances installed on board on or after 1 July 1999, refer to the *Revised recommendation on testing of life-saving appliances*, adopted by the Organization by resolution MSC.81(70).

.4 notwithstanding subparagraph .3 above, the operational testing of free-fall lifeboat release systems shall be performed either by free-fall launch with only the operating crew on board or by a simulated launching carried out based on guidelines developed by the Organization*."

5 The following new paragraphs 11.4 and 11.5 are added after existing paragraph 11.3:

"11.4 Lifeboats or rescue boats, including fast rescue boats, shall be:

.1 maintained in accordance with instructions for onboard maintenance as required by regulation 36; and

.2 subject to a thorough examination and operational test during the annual surveys required by regulations I/7 and I/8 by properly trained personnel familiar with the system.

11.5 The periodic servicing and maintenance required by paragraphs 11.1 to 11.4, other than weekly and monthly inspection required by paragraphs 6 and 7 of this regulation, shall be carried out in accordance with the Requirements for periodic servicing and maintenance."

***

* Refer to the Guidelines on safety during abandon ship drills using lifeboats (MSC.1/Circ…).

ANNEX 10

JUSTIFICATION FOR A NEW OUTPUT ON "GUIDELINES ADDRESSING THE CARRIAGE OF MORE THAN 12 INDUSTRIAL PERSONNEL ON BOARD VESSELS ENGAGED ON INTERNATIONAL VOYAGES"

Introduction

1 This proposal for inclusion of a new output addressing the carriage of more than 12 industrial personnel on board vessels engaged on international voyages is submitted in accordance with paragraphs 4.7, 5.9 and annex 1 of the *Guidelines on the organization and method of work of the Maritime Safety Committee and the Marine Environment Protection Committee and their subsidiary bodies* (MSC-MEPC.1/Circ.4/Rev.2), taking into account the Organization's objectives (resolution A.1037(27) and the *High-level Action Plan for the Organization and priorities for the 2012-2013 biennium* (resolution A.1038(27)).

2 The advent of offshore renewable energy construction projects, particularly those that are far offshore (20 to 150 nautical miles), and further innovations in the offshore oil and gas industry are creating new and increased demand for multi-purpose ships which inevitably combine some aspects of transport to and from structures and/or other ships, and accommodation, together with a variety of offshore construction activities.

3 With regard to offshore wind farm service vessels for the carriage of construction and maintenance personnel, difficulties are reported in the performance of installation and maintenance of offshore structures in international waters caused by inconsistent application of a 12-person limitation on carriage of construction and maintenance personnel. The source of this limitation derives from the interpretation of the SOLAS definition of a passenger ship as a ship which carries more than 12 passengers (SOLAS regulation I/2) on an international voyage and the industrial personnel being considered as passengers.

4 Larger offshore wind farm installations and other energy installations farther offshore and larger construction and maintenance vessels also require more than 12 maintenance and/or installation personnel to safely and economically install or maintain uninterrupted wind farm energy production.

IMO's objectives

5 This proposal is considered entirely consistent with, and supporting of, the objectives of the Organization, as provided in resolutions A.900(21) and A.901(21), in particular, "ensuring the effective uniform implementation of existing IMO standards and regulations relating to maritime safety" and "the needs of the shipping industry should be duly taken into account".

Compelling need

6 Noting that this proposal is for the Organization to embark upon a process to develop guidance/clarification on appropriate methods for addressing the carriage of industrial personnel; it is considered that there is a compelling need to undertake this work based on the reasoning contained in this justification. This issue is directly related to the safety of human life at sea, i.e. of the ships' crews and other persons on board.

7 IMO mandatory instruments do not define industrial personnel. Both the non-mandatory OSV Guidelines and SPS Code restrict the carriage of industrial personnel on an international voyage to not more than 12. More than 12 industrial personnel on board a vessel would, if considered in the context of the SOLAS Convention, require a passenger ship standard. The lack of a clear definition for industrial personnel and appropriate categorizations leads to different national interpretations and often leads to the application of safety standards that do not adequately reflect the capability of industrial personnel.

Analysis of the issue

8 In the original justification for a proposed new work programme item on the classification of offshore industry vessels (MSC 85/23/4), it was identified that guidance with regard to an acceptable safety standard for vessels carrying more than 12 industrial personnel was necessary. It is deemed that the current output is insufficient to encompass clarification on the carriage of more than 12 industrial personnel.

9 The carriage of industrial personnel is not covered in any IMO instrument and, in this context, many delegations at DE 56 supported the need to further clarify relevant categories of personnel, e.g. seafarers, special personnel or other categories, in terms of applying relevant requirements, as well as competencies and training requirements.

10 These industrial personnel are significantly more capable than a passenger on a passenger ship. The rationale is that offshore personnel are able bodied, comply with relevant industry standards regarding basic safety training, have substantial awareness of conditions at sea, a fair knowledge of the layout of the ship, and routinely carry their own personal protective equipment. The personnel do not function as vessel crew members yet may not be appropriately regarded as passengers either.

Analysis of implications

11 No additional cost to the maritime industry is anticipated because this proposal requests a new output regarding the carriage of more than 12 industrial personnel. It is anticipated that no additional administrative or legislative burdens will result from this new output. It is considered that the proposal will harmonize the current industry practice and differing national domestic requirements with the international regulatory framework, bringing benefits to all stakeholders.

Benefits

12 The proposal will facilitate the global, consistent implementation of the instruments relating to the safety of industrial personnel on board ships. It will also provide additional clarity for the Administrations and for the offshore construction industry beyond that currently provided by SOLAS, the Guidelines for the Design and Construction of Offshore Supply Vessels, 2006, the 2008 Special Purpose Ship Code, and the Code for the Construction and Equipment of Mobile Offshore Drilling Units, 2009. This output will directly benefit and improve the safety of industrial personnel carried on board these vessels.

Industry standards

13 Adequate industry standards are not available or being developed as this issue is related to definitions and applications of IMO instruments.

Output

14 This proposal requests that the Committee agree to the inclusion of a new output addressing the carriage of more than 12 industrial personnel on board vessels engaged on international voyages in the biennial agenda of the DE Sub-Committee and in the provisional agenda for DE 58. The intention of the output is to provide a definition for industrial personnel and guidance on the application of existing standards to vessels carrying these personnel. This output may be in the form of an MSC resolution and/or circular or other non-mandatory instrument. It is anticipated that this output can be completed in one session of the DE Sub-Committee.

Human element

15 The completed checklist as per the annex to MSC-MEPC.7/Circ.1 is attached.

Priority/urgency

16 The proposed output is within item 5.2 of the Strategic Plan and 5.2.1 of the High-level Action Plan. This output is critical to successful completion of the existing agenda item on the classification of offshore industry vessels.

17 DE 56 agreed that there is an urgent need to further clarify the application of relevant requirements concerning industrial personnel transported by sea (DE 56/25, paragraphs 12.5 to 12.7). It is therefore considered that this issue should be addressed as a matter of priority and as soon as practicable within the working arrangements of the Organization. It is anticipated that this output can be completed in one session of the Sub-Committee, with a target completion date of 2014.

Action requested of the Committee

18 Therefore, the DE Sub-Committee requests the Committee to include a new output addressing the carriage of more than 12 industrial personnel on board vessels engaged on international voyages in the 2014-2015 biennial agenda of the Sub-Committee and in the provisional agenda for DE 58.

APPENDIX

CHECKLIST FOR CONSIDERING HUMAN ELEMENT ISSUES BY IMO BODIES

Instructions:				
If the answer to any of the questions below is:				
	(A)	YES, the preparing body should provide supporting details and/or recommendation for further work.		
	(B)	NO, the preparing body should make proper justification as to why human element issues were not considered.		
	(C)	NA (not applicable), then the preparing body should make proper justification as to why human element issues were not considered applicable.		
Subject being assessed: (e.g. resolution, instrument, circular being considered) An MSC resolution and/or circular or other non-mandatory instrument to provide definition for industrial personnel and guidance on the [carriage] of more than 12 industrial personnel on board offshore industry vessels engaged on international voyages.				
Responsible body: (e.g. committee, sub-committee, working group, correspondence group, Member State) Maritime Safety Committee; DE Sub-Committee; Correspondence Group on Guidelines for offshore wind farm vessels				
1	Was the human element considered during development of the amendment process related to this subject?	~~YES~~	~~NO~~	NA
2	Has input from seafarers or their proxies been solicited?	~~YES~~	~~NO~~	NA
3	Are the solutions proposed for the subject in agreement with the existing instruments? (identify instruments considered in "comments" section)	~~YES~~	~~NO~~	NA
4	Have human element solutions been made as an alternative and/or in conjunction with technical solutions?	~~YES~~	~~NO~~	NA
5	Has human element guidance on the application and/or implementation of the proposed solution been provided for the following:			
	• Administrations?	~~YES~~	~~NO~~	NA
	• Shipowners/managers?	~~YES~~	~~NO~~	NA
	• Seafarers?	~~YES~~	~~NO~~	NA
	• Surveyors?	~~YES~~	~~NO~~	NA
6	At some point, before final adoption, has the solution been reviewed or considered by a relevant IMO body with relevant human element expertise?	~~YES~~	~~NO~~	NA
7	Does the solution address safeguards to avoid single person errors?	~~YES~~	~~NO~~	NA
8	Does the solution address safeguards to avoid organizational errors?	~~YES~~	~~NO~~	NA
9	If the proposal is to be directed at seafarers, is the information in a form that can be presented and is easily understood by seafarers?	~~YES~~	~~NO~~	NA
10	Have human element experts been consulted in the development of the solution?	~~YES~~	~~NO~~	NA

11	**Human element: has the proposal been assessed against each of the factors below?**			
□	CREWING. The number of qualified personnel required and available to safely operate, maintain, support and provide training for the system.	~~YES~~	~~NO~~	NA
□	PERSONNEL. The necessary knowledge, skills, abilities and the experience levels that are needed to properly perform job tasks.	~~YES~~	~~NO~~	NA
□	TRAINING. The process and tools by which personnel acquire or improve the necessary knowledge, skills and abilities to achieve desired job/task performance.	~~YES~~	~~NO~~	NA
□	OCCUPATIONAL HEALTH AND SAFETY. The management systems, programmes, procedures, policies, training, documentation, equipment, etc. to properly manage risks.	~~YES~~	~~NO~~	NA
□	WORKING ENVIRONMENT. Conditions that are necessary to sustain the safety, health, and comfort of those working on board, such as noise, vibration, lighting, climate, and other factors that affect crew endurance, fatigue, alertness and morale.	~~YES~~	~~NO~~	NA
□	HUMAN SURVIVABILITY. System features that reduce the risk of illness, injury, or death in a catastrophic event such as fire, explosion, spill, collision, flooding or intentional attack. The assessment should consider desired human performance in emergency situations for detection, response, evacuation, survival and rescue and the interface with emergency procedures, systems, facilities and equipment.	~~YES~~	~~NO~~	NA
□	HUMAN FACTORS ENGINEERING. Human-system interface to be consistent with the physical, cognitive and sensory abilities of the user population.	~~YES~~	~~NO~~	NA
Comments: (1) Justification if answers are No or Not Applicable. (2) Recommendations for additional human element assessment needed. (3) Key risk management strategies employed. (4) Other comments. (5) Supporting documentation.				
Explanation: This proposal requests a new output for the clarification and application of IMO instruments and definitions. Classification of industrial workers is an administrative matter not proposing new requirements or technical solutions. Currently industrial workers are not defined and the classification of industrial workers is not anticipated to introduce any additional human element considerations.				

***

ANNEX 11

DRAFT AMENDMENTS TO THE LSA CODE

Chapter II – Personal life-saving appliances

Section 2.2 – Lifejackets

1 Paragraph 2.2.1.6 is amended to read as follows:

"2.2.1.6 When tested according to the recommendations of the Organization on at least 12 persons, adult lifejackets shall have sufficient buoyancy and stability in calm fresh water to:

.1 lift the mouth of exhausted or unconscious persons by an average height of not less than the average provided by the adult RTD minus 10 mm;

.2 turn the body of unconscious, face down persons in the water to a position where the mouth is clear of the water in an average time not exceeding that of the RTD plus 1 s, with the number of persons not turned by the lifejacket no greater than that of the RTD;

.3 incline the body backwards from the vertical position for an average torso angle of not less than that of the RTD minus 10°;

.4 lift the head above horizontal for an average faceplane angle of not less than that of the RTD minus 10°; and

.5 return at least as many wearers to a stable face-up position after being destabilized when floating in the flexed foetal position as with the RTD when tested on the wearers in the same manner."

2 The following new paragraphs 2.2.1.8.4, 2.2.1.8.5 and 2.2.1.8.6 are added after existing paragraph 2.2.1.8.3 and the "and" at the end of paragraph 2.2.1.8.2 is deleted:

".4 for infants the jump and drop tests shall be exempted;

.5 for children, five of the nine subjects shall perform the jump and drop tests; and

.6 in lieu of paragraph 2.2.1.8.5, manikins may be substituted for human test subjects."

***

ANNEX 12

DRAFT AMENDMENTS TO THE REVISED RECOMMENDATION ON TESTING OF LIFE-SAVING APPLIANCES (RESOLUTION MSC.81(70))

Part 1 – Prototype tests for life-saving appliances

Section 2 – Lifejackets

1 In paragraph 2.6, the first sentence is replaced with the following:

"The tests specified in 2.6.1 to 2.6.7 should be carried out on eight specimens of each lifejacket-buoyancy material. A further four specimens of each lifejacket-buoyancy material should be prepared for the test specified in 2.6.8."

2 Paragraph 2.7.2.3 is amended to read as follows:

".3 at least one male should be from the lowest and highest weight group and one female should be from the lowest weight group and one female should be more than 80 kg and 1.8 m;"

3 The following sentence is added at the end of paragraph 2.8.1:

"Each test for a candidate lifejacket and the relevant RTD should be conducted on the same day."

4 In paragraph 2.8.4, the following sentence is added after the second sentence:

"Prior to taking the measurements in 2.8 and 2.9, the proper fit, donning, and fastening of the RTD on the subject should be checked and corrected as necessary."

5 In paragraph 2.8.7.1, the words "plus 1 s" are added after the words "the average time in the RTD".

6 In paragraph 2.8.7.2, the words "minus 10 mm" are added at the end.

7 In paragraph 2.8.7.3, the words "minus 5°" are replaced with the words "minus 10°".

8 In paragraph 2.8.7.4, the word "(head)" is deleted and the words "minus 5°" are replaced with the words "minus 10°".

9 Paragraph 2.8.9.1 is amended to read as follows:

".1 surface the test subject in a face up position with an average freeboard for all the subjects of not less than the average determined for the RTD after the turning test in accordance with 2.8.6 minus 15 mm;"

10 The following sentence is added at the end of paragraph 2.9:

"The tests may be modified for child test subjects under 12 years of age who are not comfortable in water, so as to ensure their safety and cooperation."

11 In paragraph 2.9.1.5, the words "infant lifejacket" are deleted.

12 In paragraph 2.9.2.1, the words "plus 1 s" are added at the end.

13 In paragraph 2.9.2.2, the words "minus 10 mm" are added at the end.

14 In paragraph 2.9.2.4, the word "(head)" is deleted.

15 The chapeau of paragraph 2.9.3 is replaced with the following:

"Infant lifejackets should meet the requirements of 2.9.2.1 and 2.9.2.2, however, the requirements for torso angle, faceplane and mobility may be relaxed if necessary in order to:"

Annex 1

Adult reference test device (RTD) design and construction

16 Annex 1 is replaced with the following:

"**1 General**

The RTD is intended for use only as a test reference standard to represent the desired level of in-water performance of a lifejacket required by the Convention, and is not considered representative of any other required lifejacket performance. The adult RTD is designed to fit persons from a chest size of 700 mm to 1350 mm and to be comfortable to wear as a non-reversible device such that it would be obvious to the wearer as to which is the inside and outside of the device, even under reduced lighting conditions. The adult RTD is made with two types of buoyant foam in a vest style using a heavy nylon cover fabric shell secured to the body with 25 mm webbing, closures and adjustments. The shell is made with slide fasteners (zippers) in place of closing seams to hold the foam within, in order that the foam inserts can be easily removed to check their buoyancy and renew or supplement them if they are out of tolerance. Hook and loop fasteners are used on the interior foam retainers to position and prevent shifting of the foam panels.

2 Materials

All materials used shall comply with ISO 12402-7.

2.1 Foam requirements

The performance of the RTD is dependent on using plastic foam of the proper stiffness, shape and buoyancy.

2.1.1 Stiffness

Two different stiffness foams are used: one is a soft foam and the other is a stiff foam. A bridge deflection test is provided to determine acceptability for the intended application. Figure A.20 provides the setup details and table A.1 provides the specific measured values. For selecting the type of foam for the specific insert, see tables A.2 and A.3. To measure the centre deflection of a foam panel of the specified cross-section ($a \times b$) and 110 mm wide, place the foam panel centred across the two equal height, parallel horizontal surfaces separated by the specified distance (c), and then load with a mass of the specified width. Note the length of the load should be at least 110 mm, such that when placed on the foam

panel it will extend the full width of the foam panel. It is acceptable for the load to extend beyond the width of the foam panel provided that it is centred over the panel with equal amounts extending over the sides of the foam panel. Measure the deflection at the bottom centre location of the foam panel 30 s after placing the load on the panel.

2.1.2 Shape

The shape of each foam insert is specified in figures A.27 to A.30. For dimensions see tables A.2 and A.4.

2.1.3 Buoyancy

The total design buoyancy of the foam inserts is 149 N. Table A.3 specifies the foam characteristics, the buoyancy for each insert and its tolerances and the overall buoyancy distribution to be verified with using the RTD for certification testing.

2.2 Other component requirements

See table A.2.

3 Construction

The construction and assembly of the device should be in accordance with tables A.2 to A.5, figures A.1 to A.19 and figures A.21 to A.36. A tolerance of ± 6 mm is used throughout for fabric cutting and stitching assembly. A tolerance of ± 6 mm is also used for foam cutting, however, the buoyancy requirements of table A.3 should be met.

3.1 Seams

3.1.1 The seam allowances are 13 mm, unless otherwise specified. All structural seams use a lock type stitch so that the seam will not unravel when a force is applied in the direction of the seam on any of the threads forming the stitch. Stitching should have a density of 7 to 12 stitches per 25 mm of stitch length. The box-x stitching on the webbing is 15 mm × 18 mm, unless otherwise specified. The bar-tack stitching on the webbing is 15 mm × 2 mm.

3.1.2 On the closing seam of the back section of the outer and inside cover, the cut ends of the fabric are turned under and stitched so that the fabric will not ravel. The cut ends of webbing should be heat-sealed.

3.1.3 Tabs on the ends of the waist belt are formed by turning under 40 mm of material twice and stitching 19 mm from the end of the folds with box-x or bar tack stitching.

3.1.4 The zippers are set to the fabric by turning under the raw edge of the fabric 13 mm, aligning the fold with the centre of the closed zipper, and topstitching through both layers of fabric and the zipper tape. The stitch line should be far enough from the zipper teeth or coil so as not to interfere with the operation of the zipper.

3.2 Assembling the fabric cover

The fabric cover is assembled as described below, with the dimensions described in figures A.31 through A.33 and table A.4.

3.2.1 Assembling the inside cover

3.2.1.1 Attach the interior fabric retainers for foam inserts 1 (component 1.7) to the "wrong" (interior) side on each lobe of the inside cover fabric (component 1.3).

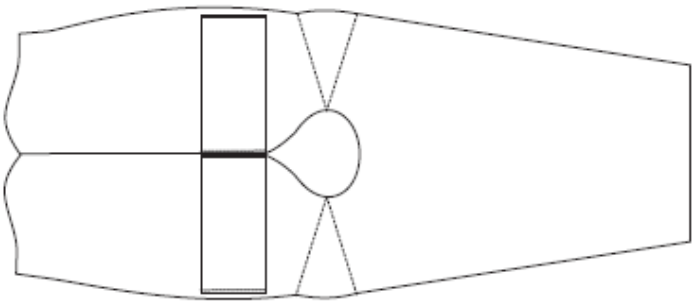

Figure A.1 – Location of Interior fabric retainers

3.2.1.2 Sew the hook and loop fasteners (component 4) to opposing sides of the interior fabric retainers for foam inserts 2 (component 1.8) as shown in figure A.2.

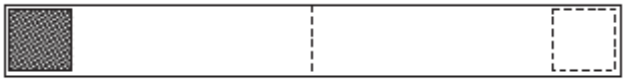

Figure A.2 – Orientation of hook and loop fasteners

3.2.1.3 Fold the interior fabric retainers for foam inserts 2 (component 1.8) in half and sew to the inside edge seam allowance of the "wrong" (interior) side of the inside cover fabric (component 1.3). Sew one fabric retainer to each lobe of the front cover fabric with the hook and loop fasteners (component 4) facing upward and oriented toward the outer edge of the inside cover fabric. Turn the bottom edge of the back cover up 13 mm and topstitch.

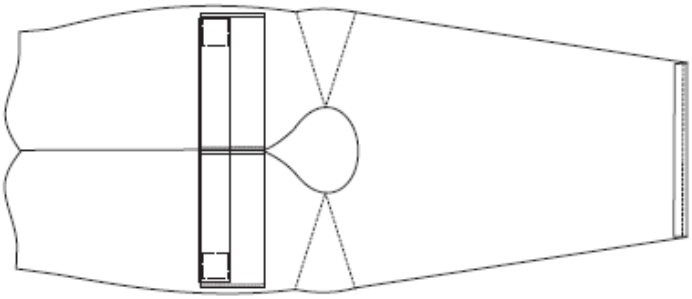

Figure A.3 – Location of fabric retainers

3.2.1.4 Attach one 89 mm black belt-loop webbing (component 3.5) to each lobe of the "right" (exterior) side of the inside cover fabric. Join the shoulder darts.

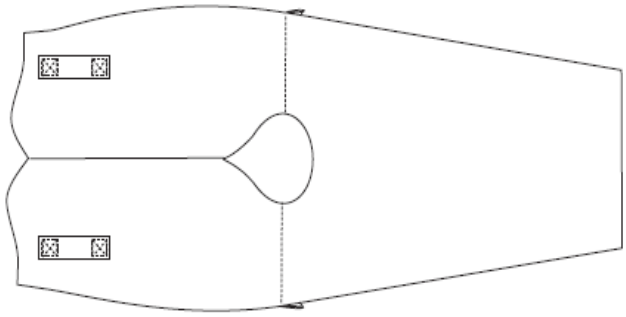

Figure A.4 – Completed inside cover

3.2.2 Assembling the collar cover

3.2.2.1 Attach the yellow collar attachment webbing (component 3.6) to the inside collar cover (component 1.5), placing one reinforcement patch (component 1.6) under the fabric, with a tack on each side, as in figure A.5. The webbing should be centred on the fabric, creating a 254 mm loop measured from the edge of one tack to the edge of the other.

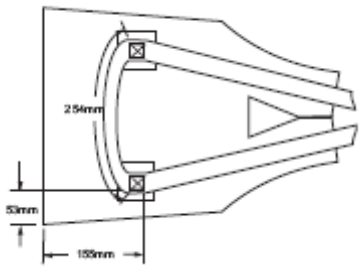

Figure A.5 – Collar attachment on collar cover

3.2.2.2 Sew the 280 mm zipper (component 6.5) to the inside and outer collar cover fabric (component 1.5) as in figure A.6.

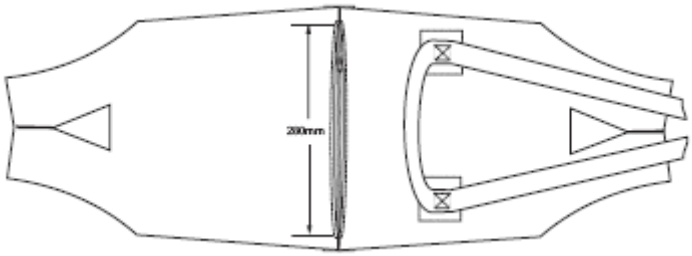

Figure A.6 – Joining the inside and outer collar cover

3.2.2.3 With the "right" (exterior) sides of the fabric together, join the sides of the inside and outer collar cover fabric (component 1.5) at the sides and around the neck opening. To allow access to the collar foam insert, do not join the fabric at the ends of the zipper. Turn the collar cover right side out.

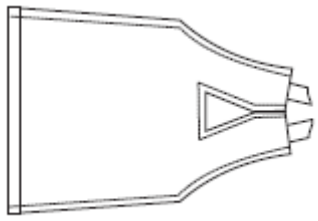

Figure A.7 – Completed collar cover

3.2.3 Assembling the outer cover

3.2.3.1 Attach one 76 mm black belt-loop webbing (component 3.4) to each shoulder on the "right" (exterior) side of the front outer cover fabric (component 1.1) using double bar tack stitches on each end, creating a 40 mm loop opening.

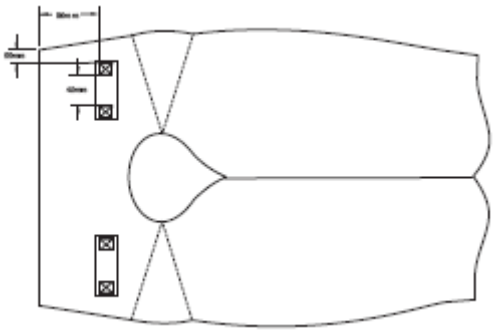

Figure A.8 – Attaching the shoulder loops

3.2.3.2 Sew the 370 mm zipper (component 6.6) to the back outer cover (component 1.2) and front outer cover (component 1.1) as shown in figure A.9. Turn the bottom edge of the back cover up 13 mm and topstitch.

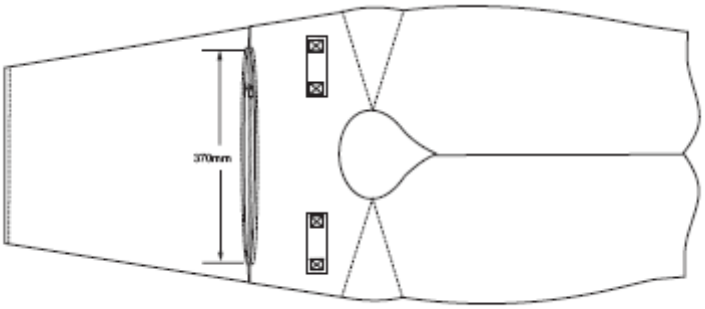

Figure A.9 – Completed outer cover

3.2.4 Joining the collar to the front outer cover

Join the shoulder darts on the front outer cover (component 1.1). Lace the yellow collar attachment webbing (component 3.6) through the black shoulder straps (component 3.4) with the collar loop facing toward the cover fabric. Stitch the collar cover fabric tabs to the neck seam.

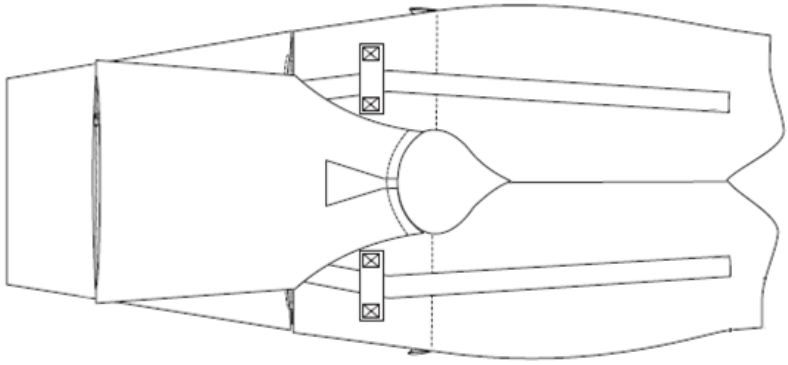

Figure A.10 – Joining the collar to the front outer cover

3.2.5 Assembling and attaching the hardware assemblies

3.2.5.1 Construct the chest strap buckle assemblies by lacing the 127 mm black chest strap webbing (component 3.1) through the male and female buckles (component 6.1) and stitching, as shown in figure A.11.

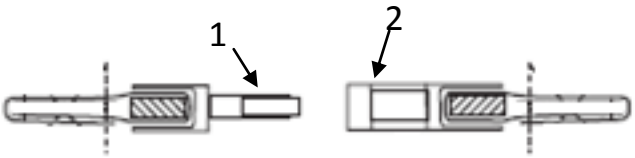

Key
1 Male buckle
2 Female buckle

Figure A.11 – Chest strap buckle assembly

3.2.5.2 Construct the waist belt assemblies by lacing the 203 mm black waist belt webbing (component 3.3) through the slide adjusters (component 6.2), snap hook (component 6.3), and D-ring (component 6.4), and stitching as shown in figure A.12.

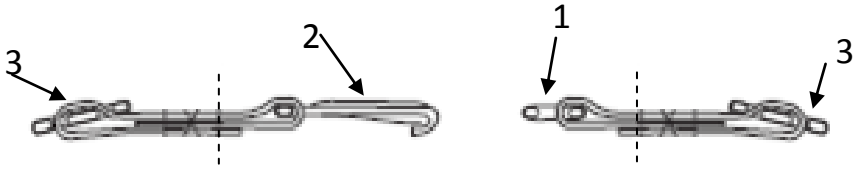

Key
1 D-Ring
2 Snap hook
3 Slide adjuster

Figure A.12 – Waist belt assembly

3.2.5.3 Lace the left side yellow collar attachment webbing (component 3.6) through the male chest strap buckle assembly. With one fabric reinforcement (component 1.6) positioned on the "wrong" (interior) side of the front outer cover fabric (component 1.1), attach the chest strap buckle assembly to the yellow collar attachment webbing and cover fabric with a box-X stitch. Repeat on the right side with the female chest strap buckle assembly.

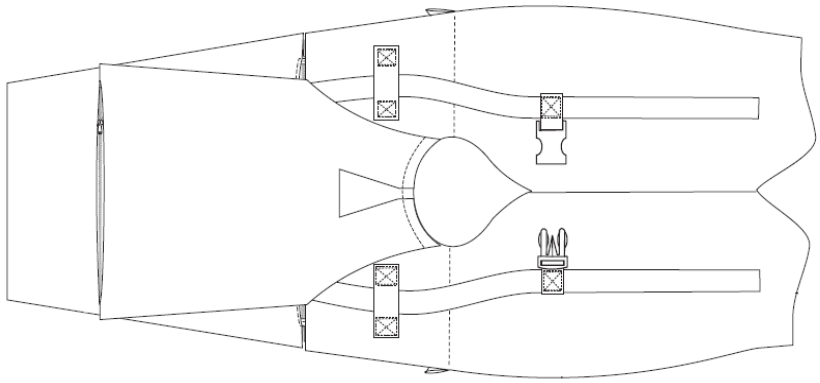

Figure A.13 – Attachment of chest strap buckle assembly

3.2.5.4 Lace the left side yellow collar attachment webbing (component 3.6) through the snap hook waist belt assembly. Attach the waist belt assembly to the yellow collar attachment webbing and the front outer cover fabric (component 1.1) with a box-X stitch. Repeat on the right side with the D-ring waist belt assembly.

3.2.5.5 Stitch the yellow collar attachment webbing to cover front, between the two buckle assemblies on each front forming a rectangle.

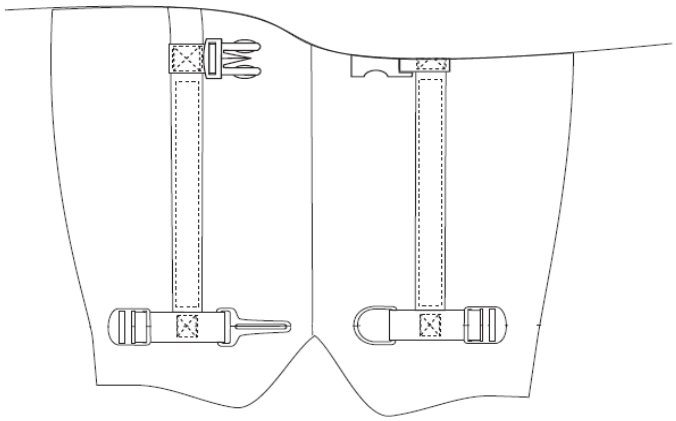

Figure A.14 – Chest and waist belt attachments

3.2.6 Joining the inside and outer covers

3.2.6.1 Join the inside cover fabric (component 1.3) to the front and back outer cover fabric (components 1.1 and 1.2) at the sides by sewing a 440 mm zipper (component 6.7) on the outside edge of each front.

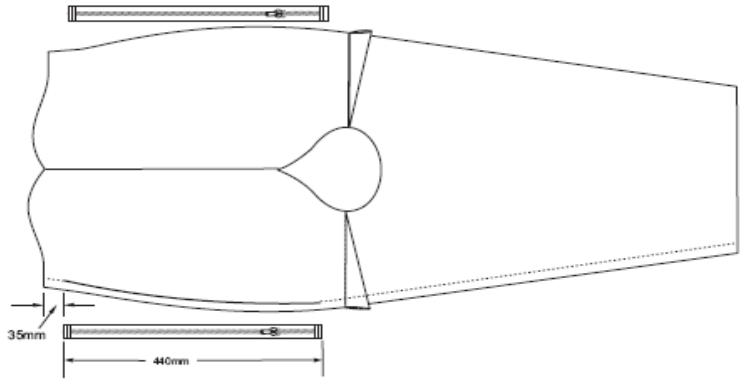

Figure A.15 – Joining the inside and outer cover fabric

3.2.6.2 Join a centre gusset (component 1.4) to the left and right lobes of the outer cover fabric, then join to the inside cover. The seam created by joining the outside edges should be centred on the end of the gusset with the taper of the gusset forming a point as it approaches the neck curve, as shown in figure A.16.

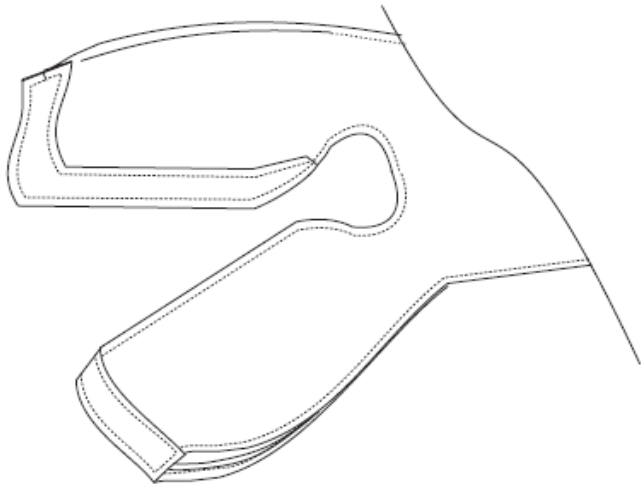

Figure A.16 – Joining the inside and outer over with the centre gusset

3.2.7 Finishing

3.2.7.1 Turn the cover right-side out. Attach the 1867 mm black waist belt webbing (component 3.3) to the back cover with three tacks, one centred on the fabric and one on each corner of the fabric. Tack the free ends of the webbing with a box-X with ends double folded. Top stitch through the inside and back outer covers, 80 mm from the foam access zipper (component 6.6).

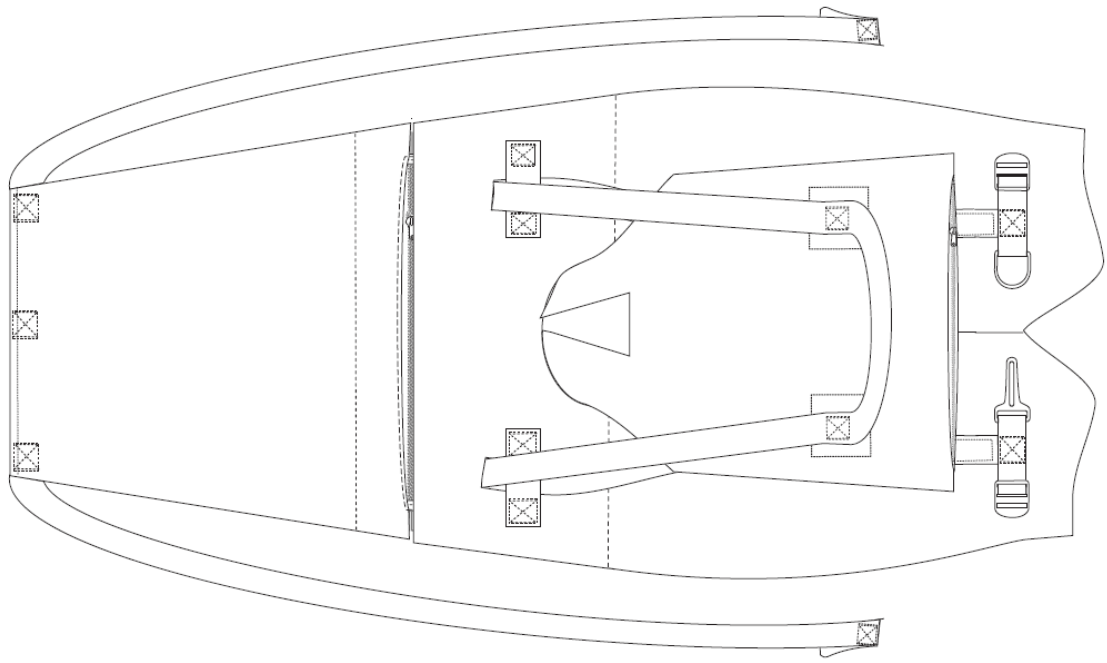

Figure A.17 – Attaching the waist belt

3.2.7.2 Lace the 1867 mm black waist belt webbing (component 3.3) through the slide adjusters (component 6.2) on each waist belt assembly.

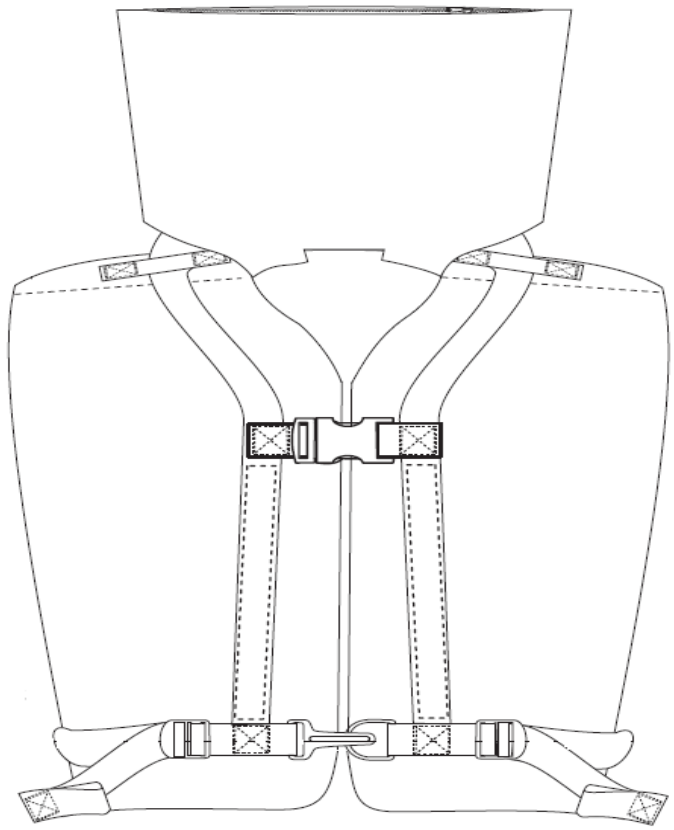

Figure A.18 – Completed RTD cover and hardware

3.3 Inserting the front foam

Slide the front foam inserts (components 2.2.1 and 2.2.2) under the interior fabric retainers for foam inserts 1 (component 1.7). Slide the interior fabric retainers for foam inserts 2 (component 1.8) through the slot in the front foam inserts (components 2.1.1 and 2.1.2). Wrap the interior fabric retainer for foam inserts around the foam insert so that the retainer passes around the front of the RTD as shown in figure A.19. Close the hook and loop fastener. Close the zipper (component 6.7).

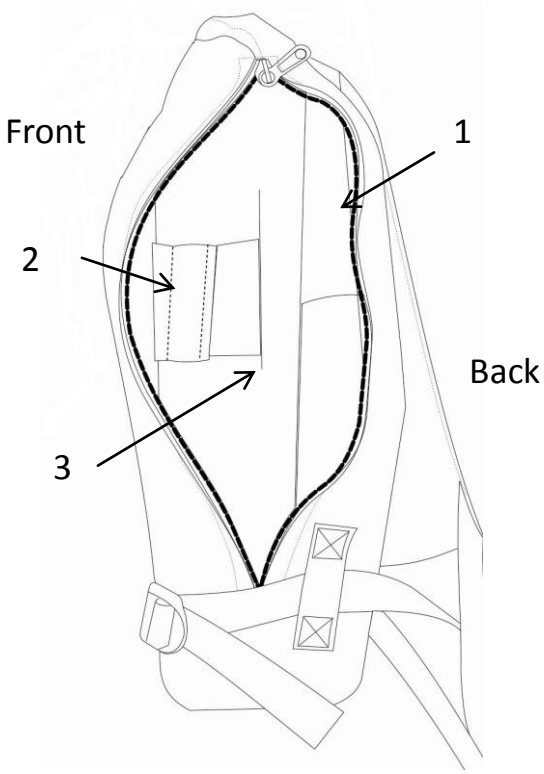

Key

1 Interior fabric retainers for foam inserts 1 (component 1.7)
2 Interior fabric retainers for foam inserts 2 (component 1.8)
3 Slot (cut through foam)

Figure A.19 – Inserting the front foam

3.4 Validation

The proper assembly of the RTD should be verified according to the Guidelines developed by the Organization*.

* Refer to the Guidelines for the validation of completed adult lifejacket reference test devices (RTD) (MSC.1/Circ…).

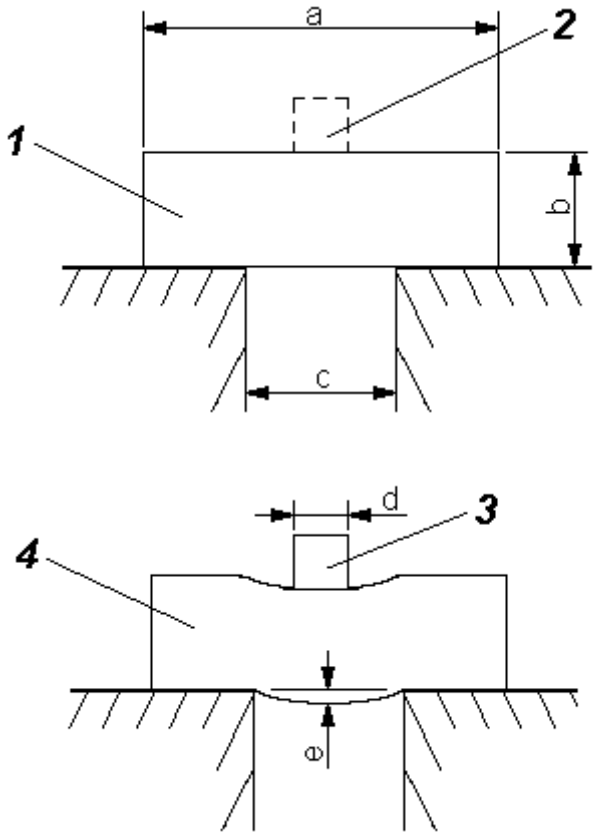

Key:

	1	Foam at initial setup
	2	Centre load
	3	Load
	4	Foam bridge deflection after 30 s

Figure A.20 – Foam bridge deflection test

Table A.1 – Specifications for the foam bridge deflection test

	Dimension shown in figure A.20						Load mass
Foam type	a (Length) mm	(Not shown) (Width) mm	b (Thickness) mm	c (Span) mm	d (Load width) mm	e (Deflection) mm	kg
Stiff	394	110	83	300	120	< 20	8.6
Soft	394	110	45	150	30	≥ 25	0.75

Table A.2 – Parts, quantity and assembly

Component		Description	Quantity	See Figure	Construction notes
1	**Cover fabric**	420 denier nylon, with ravel resistant coating, orange			
1.1	Front outer cover		1	A.21	
1.2	Back outer cover		1	A.21	
1.3	Inside cover		1	A.22	
1.4	Centre gusset		2	A.23	
1.5	Collar, outer and inside cover		2	A.24	
1.6	Fabric reinforcement		4	A.25 A.33	Attach to inside of collar cover, as attachment 1, for reinforcement at webbing attachment (see figure A.33).
1.7	Interior fabric retainers for foam inserts 1		2	A.26 A.1	Attach to inside of front cover, as attachment 3, stitch to cover at each side to form a foam retainer for inside front foam insert components 2.2.1 and 2.2.2 (see figure A.1).
1.8	Interior fabric retainers for foam inserts 2		2	A.26 A.3	Attach hoop and loop fasteners to the ends and stitch at centre to the inside of front cover, as attachment 4, to form a foam retainer for front foam insert components 2.1.1 and 2.1.2 (see figure A.3).
2	**Foam**				
2.1	Stiff	See tables A.1 and A.3			
2.1.1	Front foam insert, right side	81 mm thick	1	A.27	
2.1.2	Front foam insert, left side	81 mm thick	1	A.27	
2.1.3	Collar foam insert	56 mm thick	1	A.29	
2.2	Soft	See tables A.1 and A.3			
2.2.1	Inside front foam insert, right side	46 mm thick	1	A.28	
2.2.2	Inside front foam insert, left side	46 mm thick	1	A.28	
2.2.3	Back foam insert	25 mm thick	1	A.30	

Table A.2 *(continued)*

Component		Description	Quantity	See Figure	Construction notes
3	**Webbing**	25 mm, polypropylene, with easy adjustment and no significant slippage when used with the specified hardware.			
3.1	Chest strap	127 mm, black	2	A.11 A.31	On left side of front cover, attach webbing with male buckle. On right side of front cover attach webbing with female buckle. The free ends of the chest strap are folded under the yellow webbing (collar attachment webbing), with reinforcing fabric (see figure A.25) on inside of cover fabric. A box-x stitch is used to attach the chest strap to the front cover.
3.2	Waist belt	203 mm, black	2	A.12 A.31	On left side attach waist belt with slide and buckle clip waist belt. On right side attach bottom belt with D-ring and slide.
3.3	Waist belt	1,867 mm, black	1	A.31 A.32 A.17	Form 40 mm tab on each end. Attach to back cover using three box-x stitches (after front and back covers are assembled).
3.4	Belt-loop on front cover	76 mm, black	2	A.31 A.8	Attach webbing to front outer cover and form a belt-loop (one on each side) by two sets of double bar tack stitches.
3.5	Belt-loop on inside cover	89 mm, black	2	A.32 A.4	Attach webbing to inside cover and form a belt-loop (one on each side) by two box-x stitches.
3.6	Collar attachment	1,384 mm, yellow	1	A.14 A.6 A.31 A.33	Attach webbing to collar and reinforcing fabric, in two places using box-x stitch.
4	**Hook and loop fastener**	50 mm × 70 mm, black generic	2	A.2 A.26	Hook and loop fasteners are attached to the ends of interior fabric retainer for foam insert.
5	**Thread**	Generic synthetic	AR		
6	**Hardware**				
6.1	Buckle	Male and female 25 mm, plastic	1		Chest strap
6.2	Slide	Adjuster 25 mm, plastic	2		Waist belt
6.3	Snap hook	25 mm, SS, 1,600 N single-end strength	1		Waist belt
6.4	D-ring	25 mm, SS, 1,600 N single-end strength	2		Waist belt
6.5	Zipper	280 mm, open-ended, plastic (zipper chain and pulls)	1	A.6 A.33	Foam access for collar cover
6.6	Zipper	370 mm, plastic (zipper chain and pulls)	1	A.9 A.31	Foam access for back cover
6.7	Zipper	440 mm, plastic (zipper chain and pulls)	2	A.15 A.31 A.32	Foam access for front cover

Table A.3 – Foam insert specifications

Values in Newton (N)

	Front right	Front left	Inside front right	Inside front left	Back	Collar
Foam type[a]	Stiff	Stiff	Soft	Soft	Soft	Stiff
Buoyancy[b]	34 ± 1,1	34 ± 1,1	17,75 ± 0,65	17,75 ± 0,65	18,5 ± 0,7	28 ± 0,8

[a] The buoyancy of most foams will change over time with the greatest change occurring in the first several months after manufacture. The exact kind of foam selected will need to be evaluated to determine the amount of additional buoyancy needed at the time of manufacture to maintain the values specified.

[b] Buoyancy distribution: 69% front ± 1.5 percentage points

Table A.4 — List of dimensions shown in figures A.21 to A.33

Dimensions in millimetres

Letter	Figure											
	A.21	A.22	A.23	A.24	A.25 A.26	A.27	A.28	A.29	A.30	A.31	A.32	A.33
a	66	298	23	308	73	198	76	20	188	120	138	19
b	298	100	497	75	73	46	46	56	274	18	18	155
c	427	1106	586	10	130	76	394	51	414	35	35	53
d	430	199	102	288	205	84	38	216	343	55	295	25
e	423	398		342	72	76	51	229	147	95	55	45
f	141	597		396	470	157	165	259	223	320		
g	100	1124		65		394		45		90		
R							51	70				
h	705	141				46				40		
i	199					8				55		
j	398					20				225		
k	197					20				80		
l	723					76						
m	176					46						
n	245					38						
o						165						
p						25						

Table A.5 — List of dimensions shown in figures A.35 and A.36

Dimensions in millimetres

Figure	Dimension											
	a	*b*	*c*	*d*	*e*	*f*	*g*	*h*	*i*	*j*	*k*	*l*
A.35	450	530	980[a]	90	60	340	20	310	70	50	60	260
A.36	260	340	230	120	215	210	60	290				
	m	*n*	*o*	*p*	*q*	*r*						
A.35	240	270	130	80	70	30						
A.36												

[a] Dimension c in figure A.16 = dimensions $a + b$ (i.e. dart closed).

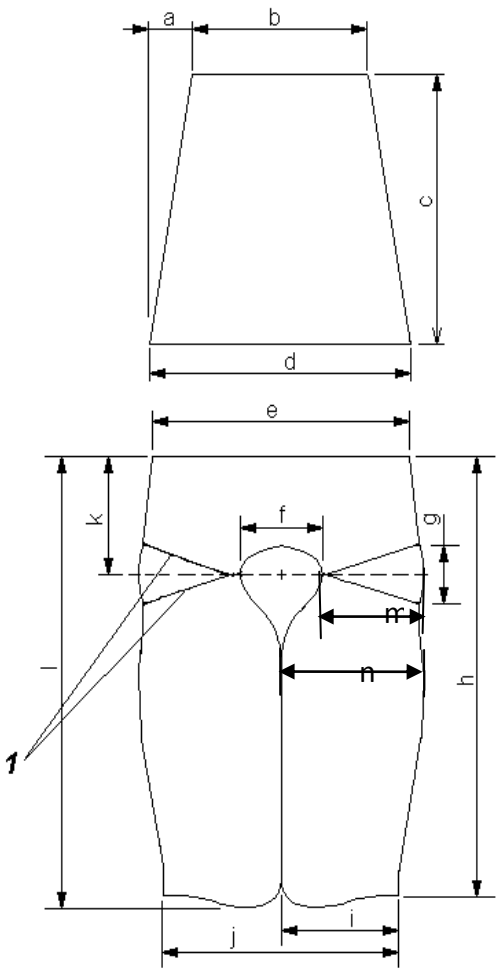

Key:
1 Dart

Figure A.11 – Outer cover, front and back sections

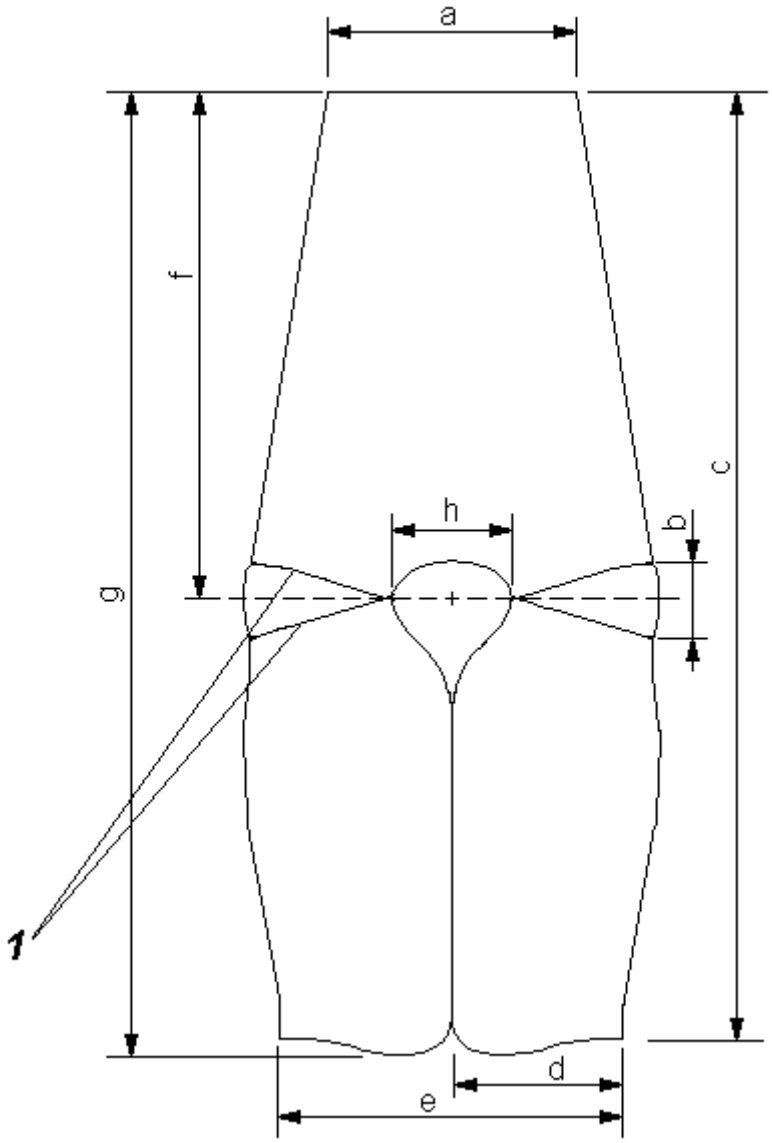

Key:
1 Dart

Figure A.22 – Inside cover

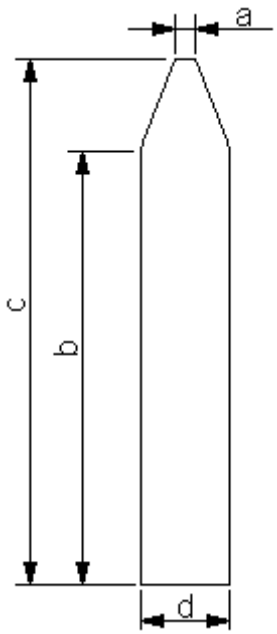

Figure A.23 – Centre gusset

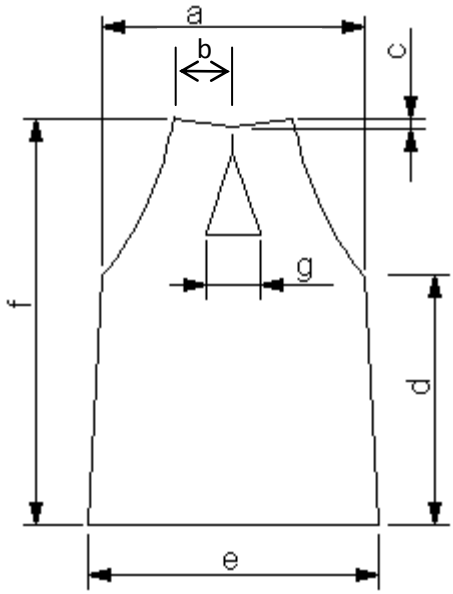

Figure A.24 – Outer and inside cover, collar

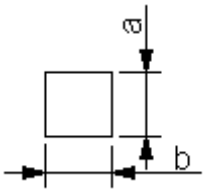

Figure A.25 – Fabric reinforcement

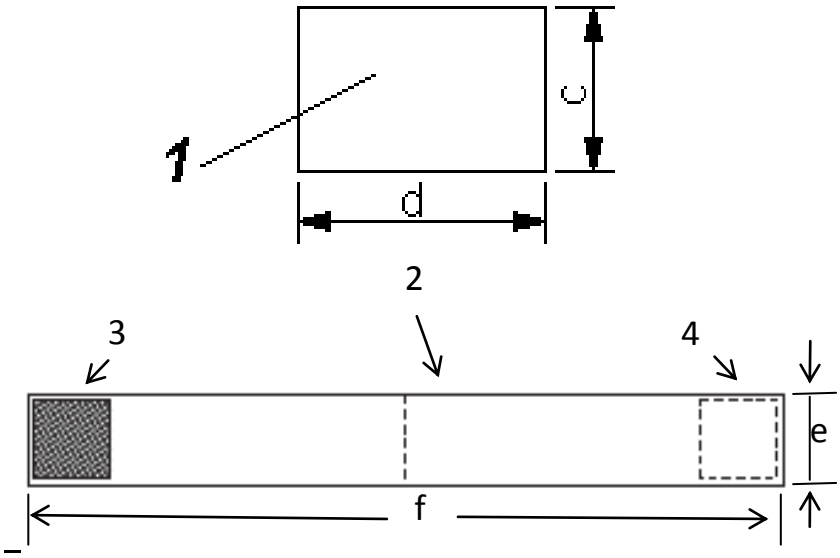

Key:

	1	Fabric retainer for the front soft foam insert
	2	Fabric retainer for the soft and stiff foam inserts
	3	Hook and loop fastener (hook portion)
	4	Hook and loop fastener (loop portion)

Figure A.26 – Interior foam retainer

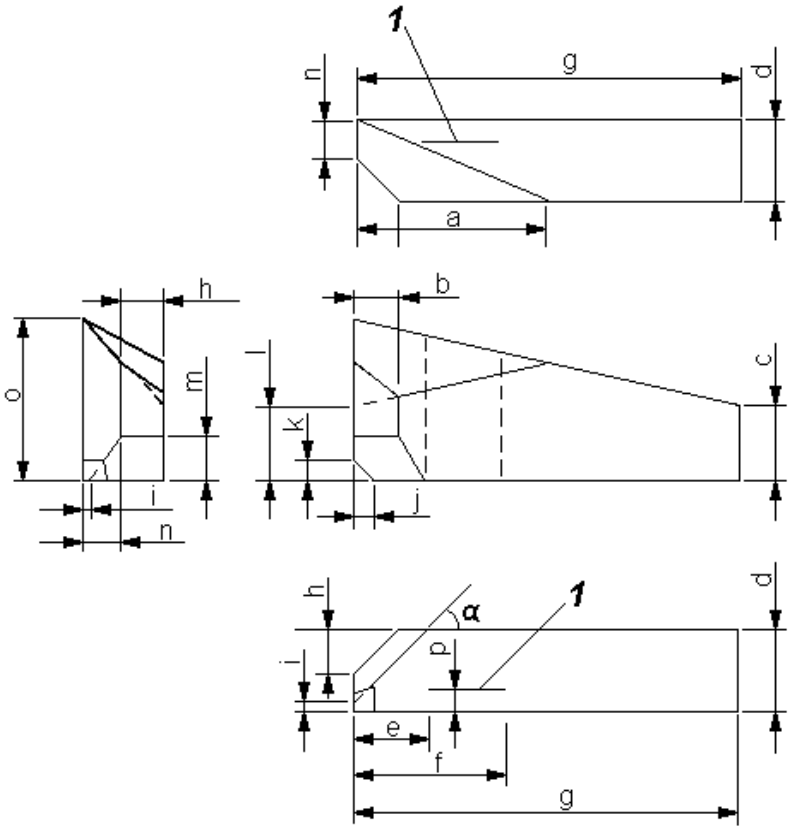

Key:

1	Slot (cut through foam insert)
α	45°

Figure A.27 – Front foam insert

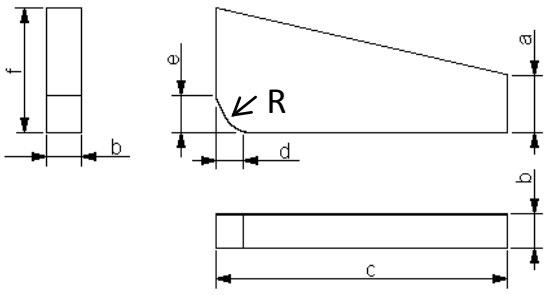

Figure A.28 – Inside front foam insert

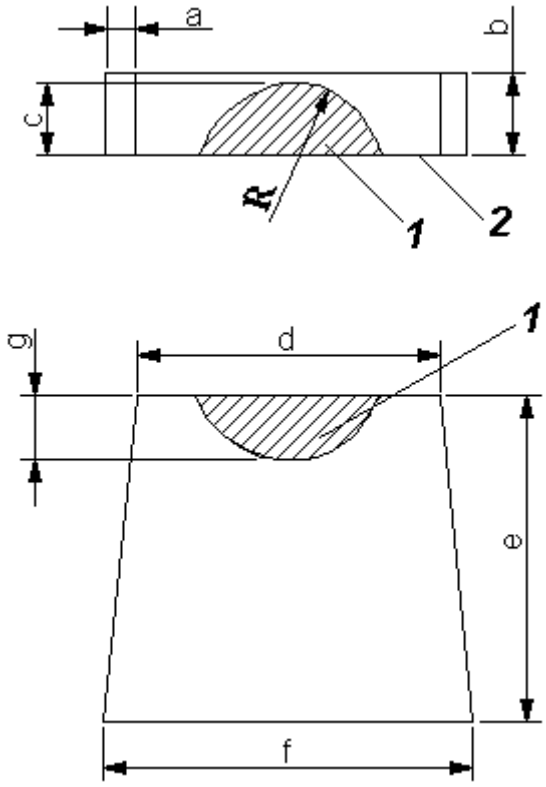

Key:

1	Skive
2	Side towards body

Figure A.29 – Collar foam insert

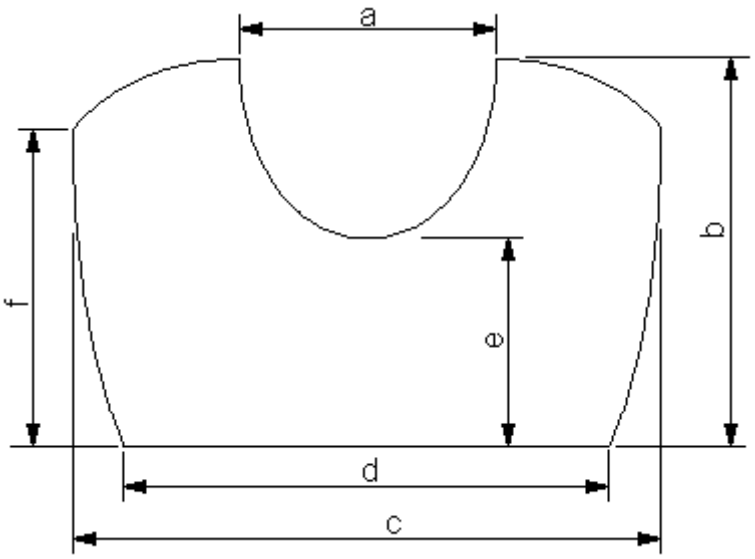

Figure A.30 – Back foam insert

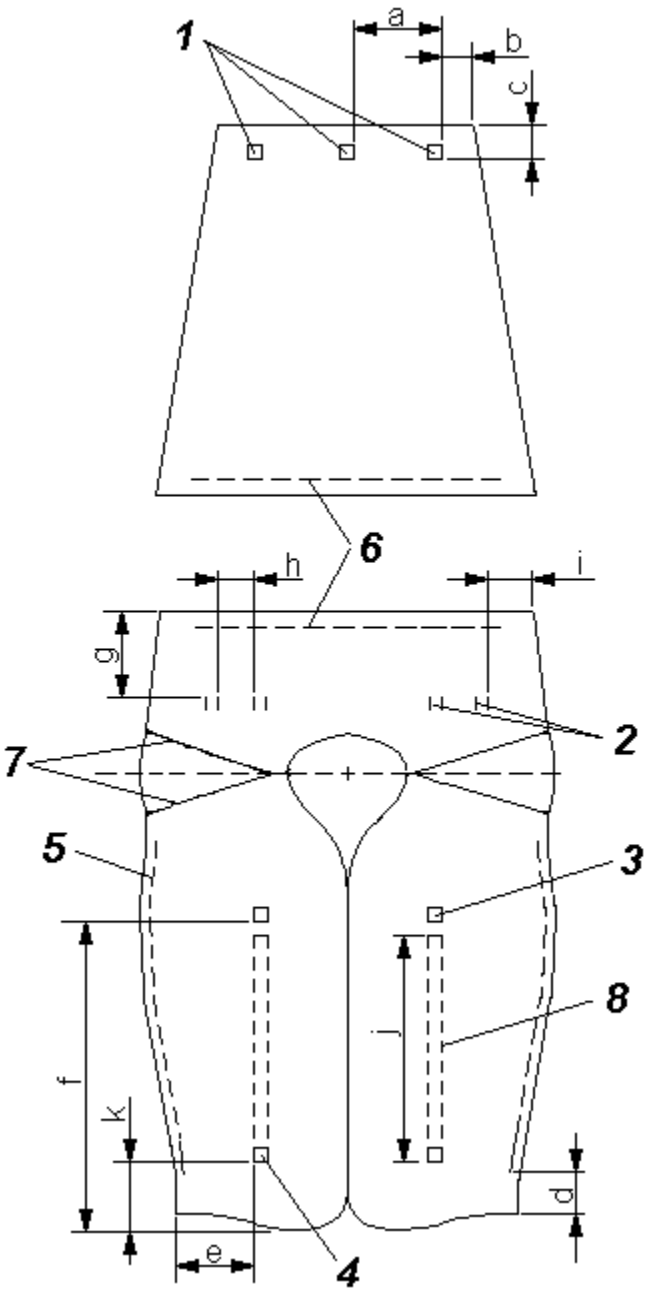

Key:

1 Waist belt (1,867 mm) attachment to outside of back cover
2 Belt loop webbing (76 mm) attachment to outside of front cover
3 Chest strap (webbing (127 mm)) attachment to outside of front cover
4 Waist belt (203 mm) attachment to outside of front cover
5 Zipper (440 mm) attachment to front
6 Zipper (370 mm) attachment to the front and back covers
7 Dart
8 Collar webbing (1,384 mm) attachment to outside of front cover

Figure A.31 – Attachments to front and back cover (dimensions on pattern, before sewing)

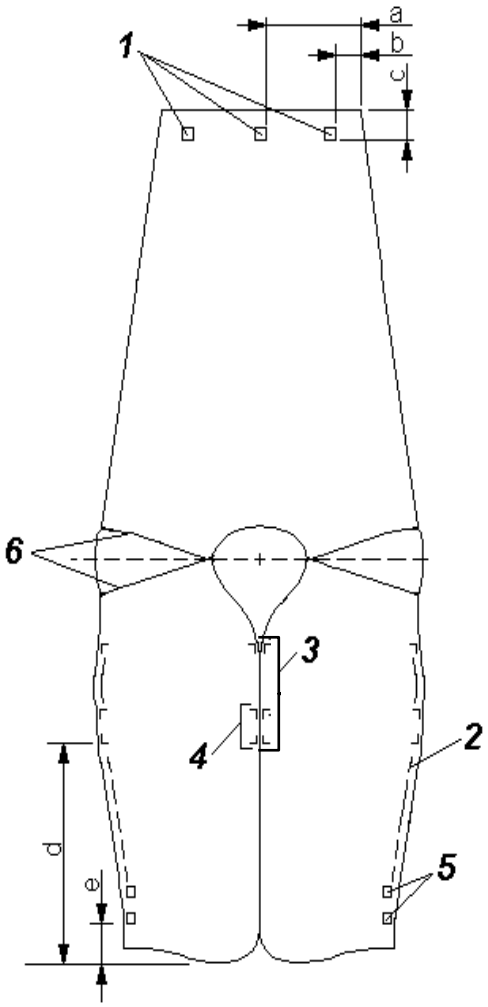

Key:

1 Waist belt (1,867 mm) attachment to outside of back cover and inside cover (see figure A.31)
2 Zipper (440 mm) attachment
3 Interior fabric retainer attachment to inside front cover
4 Interior fabric retainer attachment to centre of inside front cover
5 Belt loop webbing (89 mm) attachment to outside of cover
6 Dart

Figure A.32 – Attachments to inside cover (dimensions on pattern, before sewing)

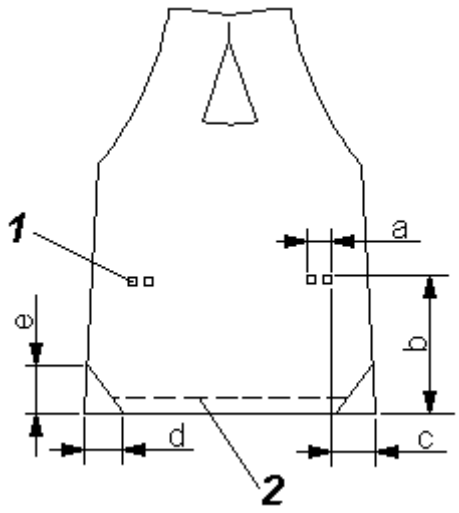

Key:

1 Collar webbing (1,384 mm) attachment on the outside of the inner cover with reinforcement fabric inside

2 Zipper (280 mm) attachment to the outer and inner covers

Figure A.33 – Attachments to outer and inside collar cover (dimensions on pattern, before sewing)

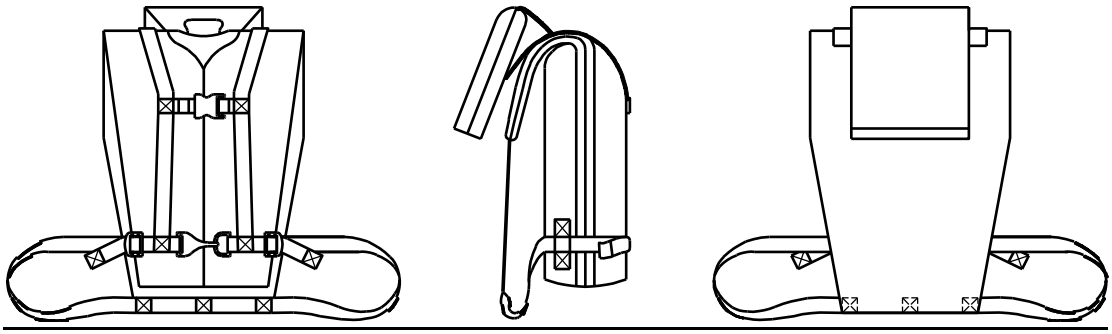

Figure A.34 – Assembly views of finished RTD

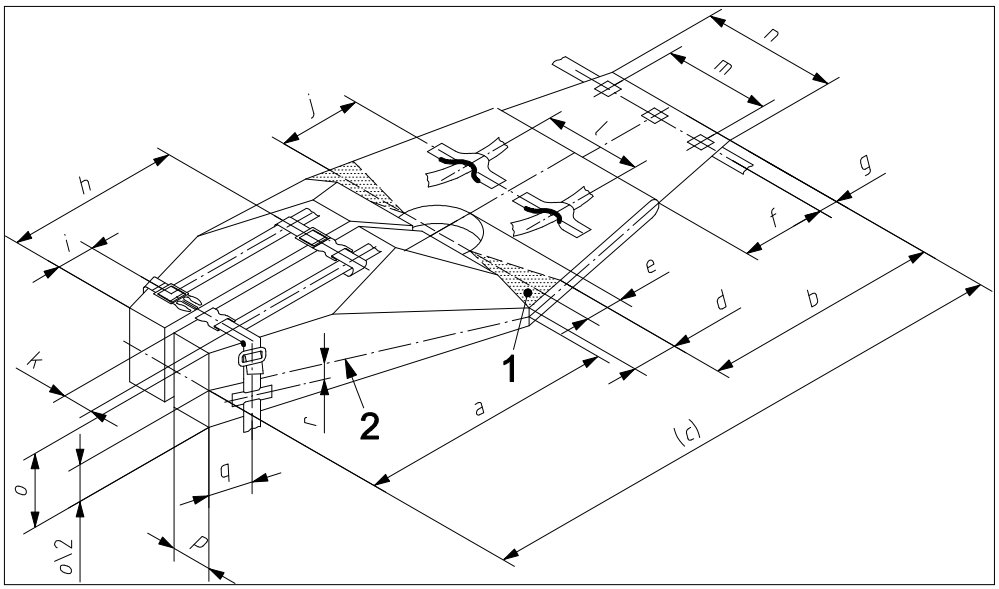

Key:
1 Dart at shoulder seam; shown spread out
2 Seam line and side zipper location

Figure A.35 – Assembly dimensions of finished RTD body with collar removed

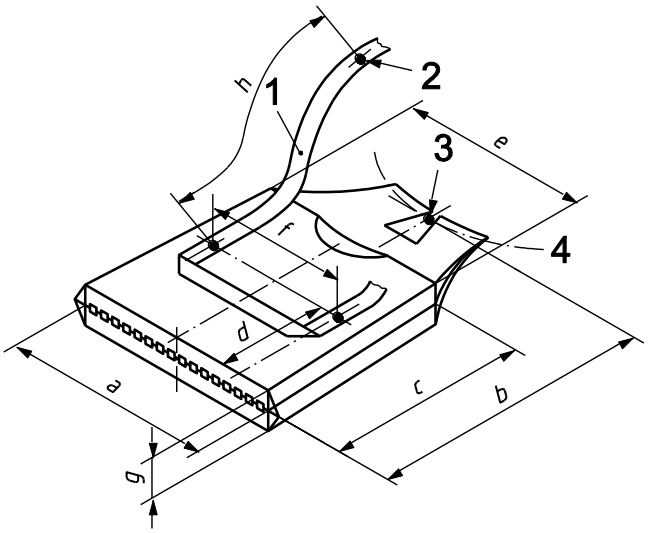

Key:
1 Collar attachment webbing
2 Nearest point of attachment to chest of vest
3 Centre of neck seam on vest
4 Assembly seam in neck of vest

Note: h is measured along the webbing to the nearest point of attachment.

Figure A.36 – Assembly dimensions of finished RTD collar

***

ANNEX 13

DRAFT MSC CIRCULAR

GUIDELINES FOR VALIDATING THE CONSTRUCTION OF A COMPLETED ADULT LIFEJACKET REFERENCE TEST DEVICE (RTD)

1 The Maritime Safety Committee, at its [ninety-second session (12 to 21 June 2013)], approved the Guidelines for validating the construction of a completed adult lifejacket reference test device (RTD), set out in the annex, following the recommendations made by the Sub-Committee on Ship Design and Equipment, at its fifty-seventh session.

2 Proper construction and continued consistency with the design documentation of the lifejacket RTD should be validated using these Guidelines after initial construction and following periodic buoyancy calibration.

3 Member Governments are urged to use the annexed Guidelines when constructing and calibrating the buoyancy of lifejacket RTDs, and to bring them to the attention of all parties concerned.

ANNEX

GUIDELINES FOR VALIDATING THE CONSTRUCTION OF A COMPLETED ADULT LIFEJACKET REFERENCE TEST DEVICE (RTD)

1 Scope and purpose

These Guidelines provide guidance for checking dimensions, buoyancy and buoyancy distribution to ensure that each RTD produced will represent the same in-water performance characteristics as the original prototype. This validation should be performed after initial construction, and repeated after reassembling the RTD following buoyancy calibration checks.

2 General

2.1 Spot check foam inserts. While it is not necessary to conduct a full check of all the dimensions of the foam, a spot check of one out of every five RTDs should be made of a representative sampling of foam pieces against the dimensions in the appropriate annex to the *Revised recommendation on testing of life-saving appliances* (resolution MSC.81(70)). The values should be within ± 6 mm.

2.2 The following should be recorded for each RTD produced:

.1 date of construction;

.2 serial numbers;

.3 total buoyancy of the RTD;

.4 buoyancy of the foam inserts, as follows:

.1 combined buoyancy of four front panels;

.2 combined buoyancy of collar and back panel; and

.3 calculated total buoyancy (sum of four front, collar and back panels); and

.5 measurements made according to these Guidelines.

3 Fabric and webbing measurements

3.1 Place a small mark on the shoulder seam 44.5 mm from the inside edge of the neck seam (see figure 1). This mark will be the reference point for measuring distances on the front and back panels. The vertical webbing should be within ± 6.5 mm of this point.

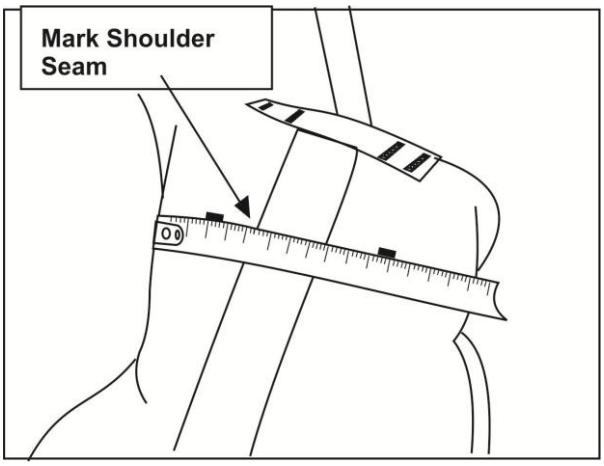

Figure 1 – Establish reference point on the shoulder seam

3.2 *Shoulder loop.* Measure the distance from the reference point to the location where the inside edge of the yellow webbing first passes under the black shoulder loop (see figure 2). This distance should be 73 ± 6 mm.

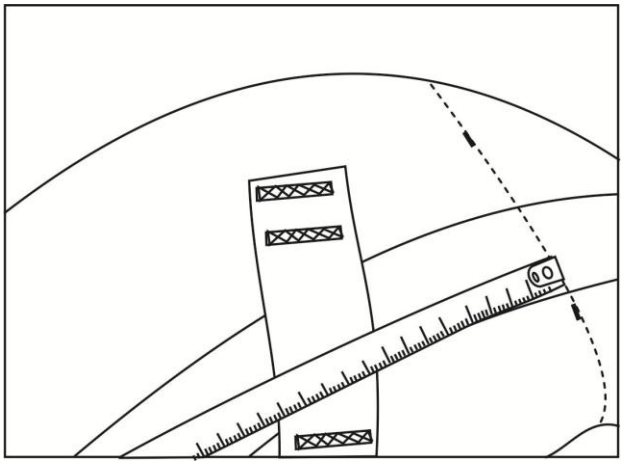

Figure 2 – Check distance to shoulder loop

3.3 *Chest strap.* Measure the distance from the reference point to the top of the chest strap (see figure 3). This distance should be 168 ± 6 mm.

3.4 *Waist belt.* Measure the distance from the reference point to the top of the waist belt (see figure 3). This distance should be 416 ± 3 mm.

3.5 *Front panel length.* Measure the distance from the reference point to the bottom of the foam (see figure 3). This distance should be 489 ± 6 mm.

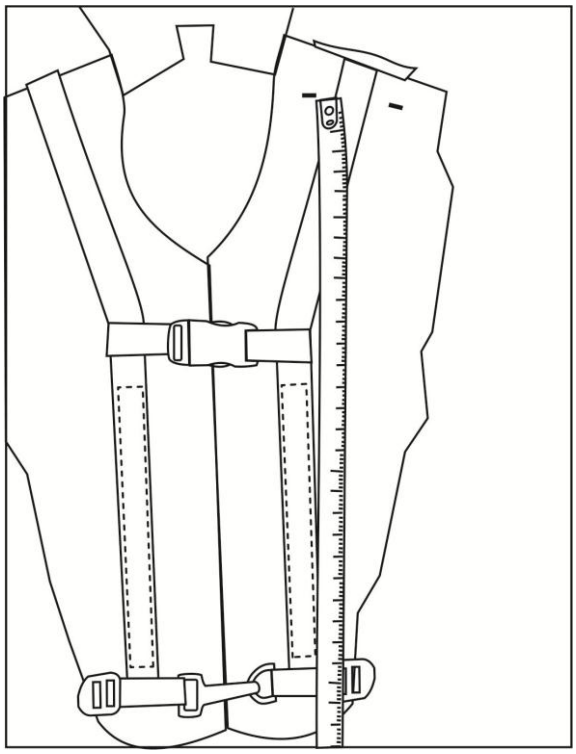

Figure 3 – Check the overall length of front panel and the location of the closures

3.6 *Waist belt.* Measure the distance from the reference point over the shoulder and down the back panel to the top of the waist belt (see figure 4). This distance should be 515 ± 6 mm.

3.7 *Back panel length.* Measure the distance from the reference point to the bottom of the back panel (see figure 4). This distance should be 550 ± 6 mm.

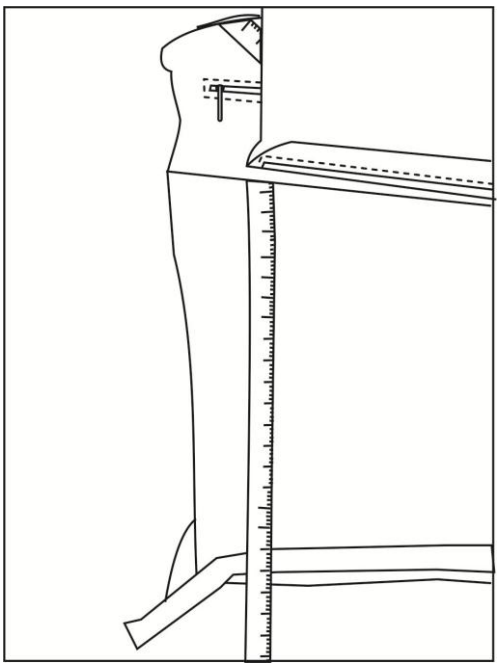

Figure 4 – Check the overall length of back panel and location of waist belt

3.8 *Collar attachment location.* To check the collar attachment location, hold the RTD by the collar, keeping the collar level so the RTD hangs freely. Measure from the top back edge of the foam down to the centre of the neck seam as shown in figure 5. This distance should be 342 ± 6 mm.

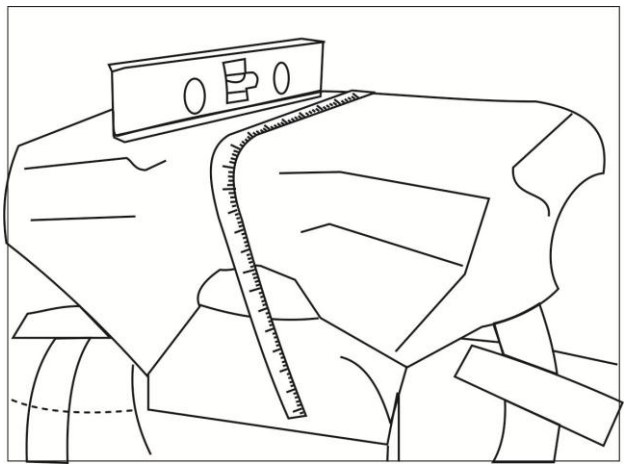

Figure 5 – Check the collar attachment location

3.9 *Webbing attachment to collar.* To check the location of the vertical webbing attachment to the collar, measure the distance from the edge of the foam (at the end opposite from the zipper) to the front seams of the box-X stitching (see figure 6). This distance should be 111 ± 6 mm.

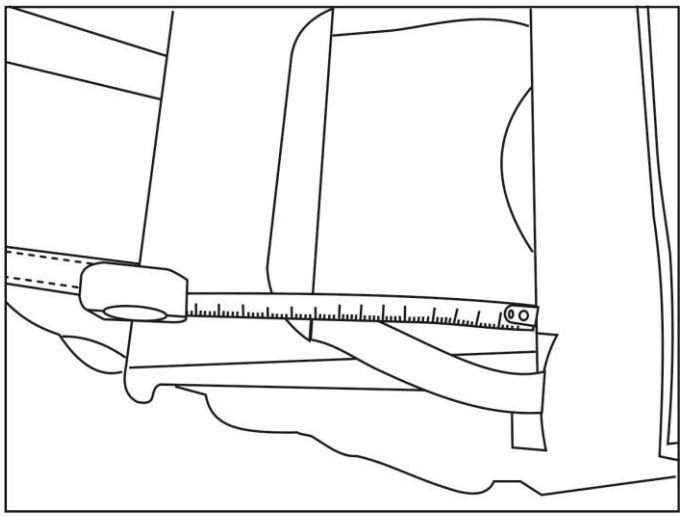

Figure 6 – Check location of vertical webbing attachment to collar

3.10 *Webbing length (chest strap to collar attachment).* To check the length of the vertical webbing from the top of the chest strap to the attachment at the collar, measure the inside distance between the box-X stitches located on the chest strap (front panel) and on the underside of the collar (see figure 7). This distance should be 263 ± 6 mm.

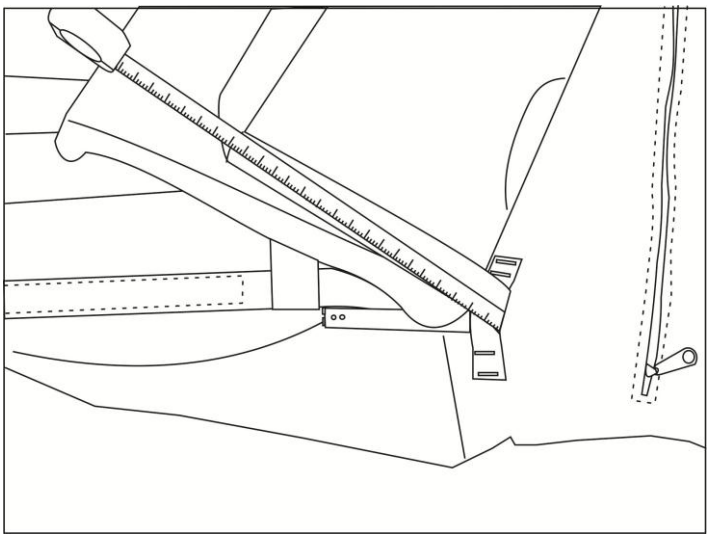

Figure 7 – Check length of webbing from chest strap to collar attachment

3.11 *Finished waist belt assembly length.* To check the finished length of the waist belt assembly, measure the overall length with the buckle unfastened and the adjustments in the full open position (maximum length). Lay the RTD on a flat surface and measure the fully extended length of the assembly. For consistency, measure the distance from where the snap hook fastens in the D-Ring. This distance should be 1700 ± 12 mm.

3.12 *Finished neck size.* A suitably sized cone (such as a traffic cone) should be used to check the finished neck size. The cone should be rigid, have a slope of 8.5° ± 1.5°, and be tall enough to allow the RTD to fit as shown in figure 8. If a flexible cone (such as a plastic traffic safety cone) is used it should be filled with rigid foam, concrete, or similar substance to make it rigid.

3.13 With both chest and waist belt buckles fastened and the waist belt adjusted to the full open position, place the RTD on the cone with just enough force so it will fit snug to the cone, but not forcing it down.

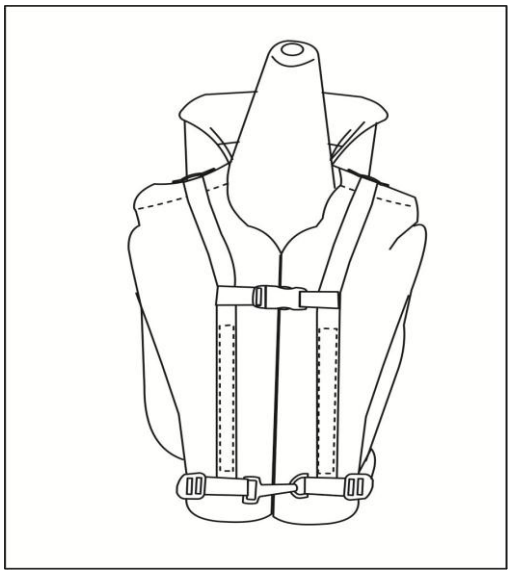

Figure 8 – Positioning the RTD

3.14 Place a mark on both sides of the cone where the shoulder seam contacts the cone (see figure 9). This mark may be used to facilitate subsequent validations. Measure the circumference around the cone at the mark. The circumference should be 395 ± 6 mm.

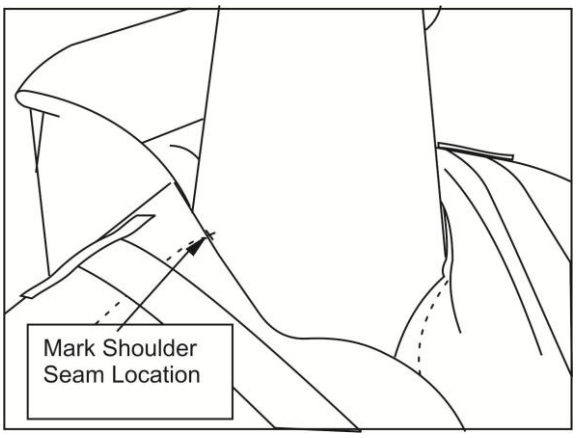

Figure 9 – Check circumference of finished neck

***

ANNEX 14

DRAFT MEPC CIRCULAR

GUIDELINES FOR THE REDUCTION OF UNDERWATER NOISE FROM COMMERCIAL SHIPPING

1 The Marine Environment Protection Committee, at its [sixty-fifth session (13 to 17 May 2013)], with a view to providing guidance on the reduction of underwater noise from commercial shipping, and following a recommendation made by the Sub-Committee on Ship Design and Equipment, at its fifty-seventh session, approved the annexed Guidelines for the reduction of underwater noise from commercial shipping.

2 Member Governments are invited to use the annexed Guidelines from [date] and to bring them to the attention of all parties concerned.

GUIDELINES FOR THE REDUCTION OF UNDERWATER NOISE FROM COMMERCIAL SHIPPING

1 Preamble

1.1 Concern has been raised that a significant portion of the underwater noise generated by human activity may be related to commercial shipping. The international community recognizes that underwater-radiated noise from commercial ships may have both short- and long-term negative consequences on marine life, especially marine mammals.

1.2 It is important to recognize that both the technical and cost effectiveness of measures considered, either individually or in combination, will be strongly dependent on the design, operational parameters, and mandatory requirements relevant for a particular ship. A successful strategy to reduce radiated noise should consider interactions and contributions from measures provided to achieve other objectives such as reduction of onboard noise and improvements in energy efficiency.

[1.3 When efforts have been made to mitigate underwater noise, as far as reasonable and practical, evaluation should be undertaken to determine the success or otherwise of ship noise reduction efforts and to guide and enhance future activities at noise reduction. Such evaluation can include forms of radiated-noise measurements, simulations or other ways of data gathering.]

2 Application

2.1 These Guidelines can be applied to any commercial ship.

2.2 These Guidelines do not address the introduction of noise from naval and war ships and the deliberate introduction of noise for other purposes such as sonar or seismic activities.

3 Purpose

3.1 These non-mandatory Guidelines are intended to provide general advice about reduction of underwater noise to designers, shipbuilders and ship operators. They are not intended to form the basis of a mandatory document.

3.2 Given the complexities associated with ship design and construction, the guidelines focus on primary sources of underwater noise. These are associated with propellers, hull form, onboard machinery, and operational aspects. Much, if not most, of the underwater noise is caused by propeller cavitation, but onboard machinery and operational modification issues are also relevant. The optimal underwater noise mitigation strategy for any ship should at least consider all relevant noise sources.

3.3 These Guidelines consider common technologies and measures that may be relevant for most sectors of the commercial shipping industry. Designers, shipbuilders, and ship operators are encouraged to also consider technologies and operational measures not included in these Guidelines, which may be more appropriate for specific applications.

4 Definitions

4.1 *Cavitation inception speed* is the lowest ship speed at which cavitation occurs.

4.2 *Propeller cavitation* is the formation and implosion of water vapour cavities caused by the decrease and increase in pressure as water moves across a propeller blade. Cavitation causes broadband noise and discrete peaks at harmonics of the blade passage frequency in the underwater noise spectrum. The broadband noise is caused by growth and collapse of a vast amount of individual cavitation bubbles in water. The discrete noise peaks are caused by the volume fluctuations of the sheet and tip vortex cavities.

4.3 *Underwater noise,* or the *underwater-radiated noise level,* for the purposes of these Guidelines refers to noise from commercial ships*.

5 Predicting underwater noise levels

5.1 Underwater noise computational models may be useful for both new and existing ships in understanding what reductions might be achievable for certain changes in design or operational behaviour. Such models may be used to analyse the noise sources on the ship, the noise transmission paths through the ship, and estimate the total predicted noise levels. This analysis can help shipowners, shipbuilders and designers, to identify noise control measures that could be considered for the specific application, taking into account expected operational conditions. Such measures may include amongst others: vibration isolation mounts (i.e. resilient mounts) for machinery and other equipment, dynamic balancing, structural damping, acoustical absorption and insulation, hull appendages and propeller design for noise reduction.

5.2 Types of computational models that may assist in reducing underwater noise include:

.1 Computational Fluid Dynamics (CFD) can be used to predict and visualize flow characteristics around the hull and appendages, generating the wake field in which the propeller operates;

.2 Propeller analysis methods such as lifting surface methods or CFD can be used for predicting cavitation;

.3 Statistical Energy Analysis (SEA) can be used to estimate high-frequency transmitted noise and vibration levels from machinery; and

.4 Finite Element Analysis (FEA) and Boundary Element Method (BEM) may contribute to estimate low-frequency noise and vibration levels from the structure of the ship excited by the fluctuating pressure of propeller and machinery excitation.

5.3 The value of a modelling exercise is enhanced if its predictive capabilities are assessed in case studies under various operational conditions.

6 Standards and references

6.1 Underwater noise should be measured to an objective standard for any meaningful improvements.

* Underwater-radiated noise level is reported in sound pressure levels in decibels and expressed as 10 times the logarithm of the square of the ratio of the rms sound pressure to a reference pressure of 1 micro Pascal. When it is a ship source level, the sound pressure level is adjusted to a level at 1 m from the source.

.1 The International Organization for Standardization (ISO) has developed the (ISO/PAS) 17208-1 - Acoustics – Quantities and procedures for description and measurement of underwater sound from ships – Part 1: General requirements for measurements in deep water. This measurement standard is for deep water which implies that the water depth should be larger than 150 m or 1.5 times overall ship length (engineering method), whichever is greater. This is a temporary publicly available standard. This standard is based on the American National Standards Institute and the Acoustical Society of America (ANSI/ASA) S12.64-2009 "Quantities and Procedures for Description and Measurement of Underwater Sound from Ships, Part 1: General Requirements".

.2 ISO is also developing ISO/DIS 16554 – Ship and marine technology – Measurement and reporting of underwater sound radiated from merchant ships – deep-water measurement, which is expected to be published in 2013. The standard would provide shipyards, shipowners and ship surveyors with a well-established measurement method for underwater sound radiated from merchant ships for use at the final delivery stage of ships.

6.2 Several research ships have been designed using the noise specification proposed by the International Council for the Exploration of the Sea (ICES) Cooperative Research Report No.209 (CRR 209). It should be noted that the ICES CRR 209 noise specification was designed for fishery research ships so that marine life would not be startled during biomass surveys; it was not intended to be used as a commercial ship design standard to prevent potential harm of marine life. However, certain design arrangements used to meet ICES CRR 209 may still be useful for new commercial ships to reduce underwater noise.

6.3 Other underwater noise rating criteria are available and may prove useful as guidance.

7 Design considerations

7.1 The largest opportunities for reduction of underwater noise will be during the initial design of the ship. For existing ships, it is unlikely to be practical to meet the underwater noise performance achievable by new designs. The following design issues are therefore primarily intended for consideration for new ships. However, consideration can also be given to existing ships if reasonable and practicable. While flow noise around the hull has a negligible influence on radiated noise, the hull form has influence on the inflow of water to the propeller. For effective reduction of underwater noise, hull and propeller design should be adapted to each other. These design issues should be considered holistically as part of the overall consideration of ship safety and energy efficiency.

7.2 *Propellers*

7.2.1 Propellers should be designed and selected in order to reduce cavitation. Cavitation will be the dominant radiated noise source and may increase underwater noise significantly. Cavitation can be reduced under normal operating conditions through good design, such as optimizing propeller load, ensuring as uniform water flow as possible into propellers (which can be influenced by hull design), and careful selection of the propeller characteristics such as: diameter, blade number, pitch, skew and sections.

7.2.2 Ships with a controllable pitch propeller could have some variability on shaft speed to reduce operation at pitch settings too far away from the optimum design pitch which may lead to unfavourable cavitation behaviour (some designs may be able to operate down to a shaft speed of two thirds of full).

7.2.3 The ship and its propeller could be model tested in a cavitation test facility such as a cavitation tunnel for optimizing the propeller design with respect to cavitation induced pressure pulses and radiated noise.

7.2.4 If predicted peak fluctuating pressure at the hull above the propeller in design draft is below 3 kPa (1st harmonic of blade rate) and 2 kPa (2nd harmonic) for ships with a block coefficient below 0.65 and 5 kPa (1st harmonic) and 3 kPa (2nd harmonic) for ships with a block coefficient above 0.65, this could indicate a potentially lower noise propeller. Comparable values are likely to be 1 kPa higher in ballast condition.

7.2.5 Noise-reducing propeller design options are available for many applications and should be considered. However, it is acknowledged that the optimal propeller with regard to underwater noise reduction cannot always be employed due to technical or geometrical constraints (e.g. ice-strengthening of the propeller). It is also acknowledged that design principles for cavitation reduction (i.e. reduce pitch at the blade tips) can cause decrease of efficiency.

7.3 *Hull design*

7.3.1 Uneven or non-homogeneous wake fields are known to increase cavitation. Therefore, the ship hull form with its appendages should be designed such that the wake field is as homogeneous as possible. This will reduce cavitation as the propeller operates in the wake field generated by the ship hull.

7.3.2 Consideration can be given to the investigation of structural optimization to reduce the excitation response and the transmission of structure-borne noise to the hull.

8 On board machinery

8.1 Consideration should be given to the selection of onboard machinery along with appropriate vibration control measures, proper location of equipment in the hull, and optimization of foundation structures that may contribute to reducing underwater radiated and onboard noise affecting passengers and crew.

8.2 Designers, shipowners and shipbuilders should request that manufacturers supply information on the airborne sound levels and vibration produced by their machinery to allow analysis by methods described in section 5.2 and recommend methods of installation that may help reduce underwater noise.

8.3 Diesel-electric propulsion has been identified as an effective propulsion-train configuration option for reducing underwater noise. In some cases, the adoption of a diesel-electric system should be considered as it may facilitate effective vibration isolation of the diesel generators which is not usually possible with large direct drive configurations. The use of high-quality electric motors may also help to reduce vibration being induced into the hull.

8.4 The most common means of propulsion on board ships is the diesel engine. The large two-stroke engines used for most ships' main propulsion are not suitable for consideration of resilient mounting. However, for suitable four-stroke engines, flexible couplings and resilient mountings should be considered, and where appropriate, may significantly reduce underwater noise levels. Four-stroke engines are often used in combination with a gear box and controllable pitch propeller. For effective noise reduction, consideration should be given to mounting engines on resilient mounts, possibly with some form of elastic coupling between the engine and the gear box. Vibration isolators are more readily used for mounting of diesel generators to foundations.

8.5 Consideration should be given for the appropriate use of vibration isolation mounts as well as improved dynamic balancing for reciprocating machinery such as refrigeration plants, air compressors, and pumps. Vibration isolation of other items and equipment such as hydraulics, electrical pumps, piping, large fans, vent and AC ducting may be beneficial for some applications, particularly as a mitigating measure where more direct techniques are not appropriate for the specific application under consideration.

9 Additional technologies for existing ships

In addition to their use for new ships, the following technologies are known to contribute to noise reduction for existing ships:

.1 design and installation of new state-of-the-art propellers;

.2 installation of wake conditioning devices; and

.3 installation of air injection to propeller (e.g. in ballast condition).

10 Operational and maintenance considerations

10.1 Although the main components of underwater noise are generated from the ship design (i.e. hull form, propeller, the interaction of the hull and propeller, and machinery configuration), operational modifications and maintenance measures should be considered as ways of reducing noise for both new and existing ships. These include among others:

10.2 *Propeller cleaning*

Propeller polishing done properly removes marine fouling and vastly reduces surface roughness, helping to reduce propeller cavitation.

10.3 *Underwater hull surface*

Maintaining a smooth underwater hull surface and smooth paintwork may also improve a ship's energy efficiency by reducing the ship's resistance and propeller load. Hence, it will help to reduce underwater noise emanating from the ship. Effective hull coatings that reduce drag on the hull, and reduce turbulence, can facilitate the reduction of underwater noise as well as improving fuel efficiency.

10.4 *Selection of ship speed*

10.4.1 In general, for ships equipped with fixed pitch propellers, reducing ship speed can be a very effective operational measure for reducing underwater noise, especially when it becomes lower than the cavitation inception speed.

10.4.2 For ships equipped with controllable pitch propellers, there may be no reduction in noise with reduced speed. Therefore, consideration should be given to optimum combinations of shaft speed and propeller pitch.

10.4.3 However, there may be other, overriding reasons for a particular speed to be maintained, such as safety, operation and energy efficiency. Consideration should be given in general to any critical speeds of an individual ship with respect to cavitation and resulting increases in radiated noise.

10.5 ***Re-routeing and operational decisions to reduce adverse impacts on marine life***

Speed reductions or routing decisions to avoid sensitive marine areas including well known habitats or migratory pathways when in transit will help to reduce adverse impacts on marine life.

***

ANNEX 15

DRAFT AMENDMENTS TO SOLAS REGULATION II-1/29

CHAPTER II-1
CONSTRUCTION – STRUCTURE, SUBDIVISION AND STABILITY, MACHINERY AND ELECTRICAL INSTALLATIONS

PART C
MACHINERY INSTALLATIONS

Regulation 29 – Steering gear

1 The following new paragraph 3.5 is added after existing paragraph 3.4:

"3.5 Where it is impracticable to demonstrate compliance with the requirements in paragraph 3.2 during sea trials with the ship at its deepest seagoing draught and running ahead at the speed corresponding to the number of maximum continuous revolutions of the main engine and maximum design pitch, one of the following methods is acceptable:

.1 during sea trial the ship is at even keel and the rudder fully submerged whilst running ahead at the speed corresponding to the number of maximum continuous revolutions of the main engine and maximum design pitch; or

.2 where full rudder immersion during sea trials cannot be achieved, an appropriate ahead speed shall be calculated using the submerged rudder blade area in the proposed sea trial loading condition. The calculated ahead speed shall result in a force and torque applied to the main steering gear which is at least as great as if it was being tested with the ship at its deepest seagoing draught and running ahead at the speed corresponding to the number of maximum continuous revolutions of the main engine and maximum design pitch; or

.3 the rudder force and torque at the sea trial loading condition have been reliably predicted and extrapolated to the full load condition. The speed of the ship shall correspond to the number of maximum continuous revolutions of the main engine and maximum design pitch of the propeller."

2 The following new paragraph 4.4 is added after existing paragraph 4.3:

"4.4 Where it is impracticable to demonstrate compliance with the requirements in paragraph 4.2 during sea trials with the ship at its deepest seagoing draught and running ahead at one half of the speed corresponding to the number of maximum continuous revolutions of the main engine and maximum design pitch or 7 knots, whichever is greater, one of the following methods is acceptable:

.1 during sea trial the ship is at even keel and the rudder fully submerged whilst running ahead at one half of the speed corresponding to the number of maximum continuous revolutions of the main engine and maximum design pitch or 7 knots, whichever is greater; or

.2 where full rudder immersion during sea trials cannot be achieved, an appropriate ahead speed shall be calculated using the submerged rudder blade area in the proposed sea trial loading condition. The calculated ahead speed shall result in a force and torque applied to the auxiliary steering gear which is at least as great as if it was being tested with the ship at its deepest seagoing draught and running ahead at one half of the speed corresponding to the number of maximum continuous revolutions of the main engine and maximum design pitch or 7 knots, whichever is greater; or

.3 the rudder force and torque at the sea trial loading condition have been reliably predicted and extrapolated to the full load condition."

***

ANNEX 16

PROPOSED BIENNIAL AGENDA OF THE SUB-COMMITTEE FOR THE 2014-2015 BIENNIUM AND ITEMS ON THE POST-BIENNIAL AGENDA OF THE COMMITTEE UNDER THE PURVIEW OF THE SUB-COMMITTEE

PLANNED OUTPUTS 2014-2015					
Number	**Description**	**Parent organ(s)**	**Coordinating organ(s)**	**Associated organ(s)**	**Target completion year**
1.1.2.2	Cooperation with IACS: consideration of unified interpretations	MSC/MEPC		BLG/DE/FP/FSI/ NAV/SLF	Continuous
1.1.2.3	Development of amendments to the 2011 ESP Code	MSC	DE		Continuous
1.1.2.11	Review of provisions for helicopters in SOLAS	MSC	DE		Continuous
Notes:	Deleted. Moved to Committee's post-biennial agenda.				
2.0.1.10	Revision of the standard specification for shipboard incinerators (resolution MEPC.76(40))	MEPC	DE		2013
Notes:	The work on this output is completed.				
2.0.1.24	Development of amendments to SOLAS regulation II-1/40.2 concerning general requirements on electrical installations	MSC	DE		2014
Notes:	Target completion year extended to 2014.				
5.1.2.1	Making the provisions of MSC.1/Circ.1206/Rev.1 mandatory	MSC	DE	FSI/NAV/STW	2013
Notes:	The work on this output is completed.				

Number	Description	Parent organ(s)	Coordinating organ(s)	Associated organ(s)	Target completion year
5.1.2.3	Development of a new framework of requirements for life-saving appliances	MSC	DE		2013
Notes:	Target completion year extended to 2015.				
5.2.1.7	Review of general cargo ship safety	MSC		DE/DSC/FP/ NAV/SLF/STW	2013
Notes:	Target completion year extended to 2014.				
5.2.1.11	Development of safety objectives and functional requirements of the Guidelines on alternative design and arrangements for SOLAS chapters II-1 and III	MSC	DE		2013
Notes:	Target completion year extended to 2015.				
5.2.1.12	Development of amendments to the LSA Code for thermal performance of immersion suits	MSC	DE		2013
Notes:	Target completion year extended to 2014.				
5.2.1.13	Development of amendments to the LSA Code for free-fall lifeboats with float-free capabilities	MSC	DE		2013
Notes:	Target completion year extended to 2014.				
5.2.1.17	Development of a mandatory Code of ships operating in polar waters	MSC/MEPC	DE	COMSAR/FP/NAV/ SLF/STW	2014
5.2.1.21	Classification of offshore industry vessels and consideration of the need for a non-mandatory code for offshore construction support vessels	MSC	DE		2013
Notes:	Target completion year extended to 2015.				

Number	Description	Parent organ(s)	Coordinating organ(s)	Associated organ(s)	Target completion year
5.2.1.24	Revision of testing requirements for lifejacket RTDs in resolution MSC.81(70)	MSC	DE		2013
Notes:	The work on this output is completed.				
5.2.1.25	Development of guidelines for wing-in-ground craft	MSC	DE	COMSAR/FP/NAV/ SLF/STW	2013
Notes:	Target completion year extended to 2015.				
5.2.1.27	Revision of the Recommendation on conditions for the approval of servicing stations for inflatable liferafts (resolution A.761(18))	MSC	DE		2013
Notes:	Target completion year extended to 2014.				
5.2.1.28	Amendments to SOLAS regulation II-1/11 and development of associated Guidelines to ensure the adequacy of testing arrangements for watertight compartments	MSC	DE		2013
Notes:	Target completion year extended to 2015.				
5.2.1.31	Development of requirements for onboard lifting appliances and winches	MSC	DE		2014
Notes:	Target completion year extended to 2015.				
5.2.1.33	Development of amendments to SOLAS regulations II-1/29.3.2 and 29.4.2 clarifying the requirements for steering gear trials	MSC	DE		2013
Notes:	The work on this output is completed.				

Number	Description	Parent organ(s)	Coordinating organ(s)	Associated organ(s)	Target completion year
5.2.1…	Carriage of more than 12 industrial personnel on board vessels engaged on international voyages	MSC	DE		2014
Notes: A justification for a new output has been forwarded to MSC 92 for consideration (DE 57/25, annex 10).					
7.1.2.3	Provisions for the reduction of noise from commercial shipping and its adverse impacts on marine life	MEPC	DE		2013
Notes: The work on this output is completed.					
12.1.2.1	Casualty analysis	MSC/MEPC	FSI	DE	Continuous

ITEMS ON THE POST-BIENNIAL AGENDA OF THE COMMITTEE UNDER THE PURVIEW OF THE SUB-COMMITTEE

Maritime Safety Committee (MSC)								
ACCEPTED POST-BIENNIAL OUTPUTS								
Number	**Biennium (when the output was placed on the post-biennial agenda)**	**Reference to High-level Actions**	**Description**	**Parent organ(s)**	**Coordinating organs(s)**	**Associated organ(s)**	**Timescale (sessions)**	**References**
1	2012-2013	2.0.1	Mandatory application of the Performance standard for protective coatings for void spaces on bulk carriers and oil tankers	MSC	DE		2	MSC 76/23, paragraphs 20.41.2 and 20.48; DE 50/27, section 4
2	2012-2013	2.0.1	Performance standard for protective coatings for void spaces on all types of ships	MSC	DE		2	MSC 76/23, paragraphs 20.41.2 and 20.48

Maritime Safety Committee (MSC)								
ACCEPTED POST-BIENNIAL OUTPUTS								
Number	**Biennium (when the output was placed on the post-biennial agenda)**	**Reference to High-level Actions**	**Description**	**Parent organ(s)**	**Coordinating organs(s)**	**Associated organ(s)**	**Timescale (sessions)**	**References**
3	2012-2013	2.0.1	Revision of the provisions for helicopter facilities in SOLAS and the MODU Code	MSC	DE		2	MSC 86/26, paragraph 23.39
4	2012-2013	12.2.1	Recommendations related to navigational sonar on crude oil tankers	MSC	DE		1	MSC 91/22, paragraph 19.23
5	2012-2013	5.2.1	Development of amendments to the 2009 MODU Code concerning lifeboat drills	MSC	DE		2	MSC 89/25, paragraph 22.24
6	2012-2013	5.2.1	Review of the 2009 Code on Alerts and Indicators	MSC	DE	NAV	2	MSC 89/25, paragraph 22.25
7	2012-2013	5.2.1	Development of a requirement for hoist winches to be tested following any maintenance, repair or modification (MSC.1/Circ.1331)	MSC	DE		1	MSC 90/28, paragraph 25.31, MSC.1/Circ.1331
8	2012-2013	5.2.1	Development of amendments to the Guidelines for vessels with dynamic positioning (DP) systems (MSC/Circ.645)	MSC	DE		2	MSC 90/28, paragraph 25.34, MSC/Circ.645

***

ANNEX 17

PROVISIONAL AGENDA FOR DE 58

Opening of the session and election of Chairman and Vice-Chairman for 2014

1 Adoption of the agenda

2 Decisions of other IMO bodies

3 Consideration of IACS unified interpretations

4 Development of amendments to the 2011 ESP Code

5 Development of amendments to SOLAS regulation II-1/40.2 concerning general requirements on electrical installations

6 Development of a new framework of requirements for life-saving appliances

7 Review of general cargo ship safety

8 Development of safety objectives and functional requirements of the Guidelines on alternative design and arrangements for SOLAS chapter II-1

9 Development of amendments to the LSA Code for thermal performance of immersion suits

10 Development of amendments to the LSA Code for free-fall lifeboats with float-free capabilities

11 Development of a mandatory Code for ships operating in polar waters

12 Classification of offshore industry vessels and consideration of the need for a non-mandatory Code for offshore construction support vessels

13 Carriage of more than twelve industrial personnel on board vessels engaged on international voyages*

14 Development of guidelines for wing-in-ground craft

15 Revision of the *Recommendation on conditions for the approval of servicing stations for inflatable liferafts* (resolution A.761(18))

16 Amendments to SOLAS regulation II-1/11 and development of associated Guidelines to ensure the adequacy of testing arrangements for watertight compartments

17 Development of requirements for onboard lifting appliances and winches

18 Casualty analysis

19 Biennial agenda and provisional agenda for DE 59

20 Election of Chairman and Vice-Chairman for 2015

21 Any other business

22 Report to the Maritime Safety Committee

***

* Subject to approval by MSC 92.

ANNEX 18

REPORT ON THE STATUS OF PLANNED OUTPUTS OF THE HIGH-LEVEL ACTION PLAN OF THE ORGANIZATION AND PRIORITIES FOR THE 2012-2013 BIENNIUM RELEVANT TO THE SUB-COMMITTEE

SUB-COMMITTEE ON SHIP DESIGN AND EQUIPMENT								
Planned output number in the HLAP for 2012-2013	**Description**	**Target completion year**	**Parent organ(s)**	**Coordinating organ(s)**	**Associated organ(s)**	**Status of output for Year 1**	**Status of output for Year 2**	**References**
1.1.2.2	Cooperation with IACS: consideration of unified interpretations	Continuous	MSC			Ongoing	Ongoing	MSC 78/26, paragraph 22.12; DE 57/25, section 3
1.1.2.3	Development of amendments to the 2011 ESP Code	Continuous	MSC			Ongoing	Ongoing	DE 57/25, section 24
1.1.2.11	Review of provisions for helicopters in SOLAS	Continuous	MSC	DE		Postponed	Postponed	MSC 89/25, section 22
2.0.1.10	Revision of the Standard specification for shipboard incinerators (resolution MEPC.76(40))	2013	MEPC	DE		In progress	Completed	MEPC 62/24, section 20; DE 57/25, section 4
2.0.1.24	Mandatory instruments: Development of amendments to SOLAS regulation II-1/40.2 concerning general requirements on electrical installations	~~2013~~ 2014	MSC	DE		In progress	In progress	MSC 86/26, paragraph 23.36; DE 57/25, section 5
5.1.2.1	Making the provisions of MSC.1/Circ.1206/Rev.1 mandatory	2013	MSC	DE	FSI NAV STW	In progress	Completed	MSC 74/24, paragraph 21.34; DE 57/25, section 6
5.1.2.3	Development of a new framework of requirements for life-saving appliances	~~2013~~ 2014	MSC	DE		In progress	In progress	MSC 82/24, paragraph 21.49; DE 57/25, section 7

SUB-COMMITTEE ON SHIP DESIGN AND EQUIPMENT								
Planned output number in the HLAP for 2012-2013	**Description**	**Target completion year**	**Parent organ(s)**	**Coordinating organ(s)**	**Associated organ(s)**	**Status of output for Year 1**	**Status of output for Year 2**	**References**
5.1.2.4	Development of performance standards for recovery systems for all types of ships	2012	MSC	DE		Completed		MSC 81/25, paragraph 23.49.1; DE 56/25, section 3
5.2.1.7	Review of general cargo ship safety	~~2013~~ 2014	MSC	DE/DSC/FP NAV/SLF STW			In progress	MSC 90/28, paragraph 25.10; DE 57/25, section 19
5.2.1.11	Development of safety objectives and functional requirements of the Guidelines on alternative design and arrangements for SOLAS chapters II-1 and III	~~2013~~ 2014	MSC	DE		In progress	In progress	MSC 84/24, paragraphs 3.92 and 21.52; DE 57/25, section 8
5.2.1.12	Development of amendments to the LSA Code for thermal performance of immersion suits	~~2013~~ 2014	MSC	DE		In progress	In progress	MSC 84/24, paragraph 22.48; DE 57/25, section 9
5.2.1.13	Development of amendments to the LSA Code for free-fall lifeboats with float-free capabilities	~~2013~~ 2014	MSC	DE		In progress	In progress	MSC 76/23, paragraphs 20.41.3 and 20.48; DE 57/25, section 10
5.2.1.17	Development of a mandatory Code for ships operating in polar waters	2014	MSC MEPC	DE	FP/ COMSAR/ NAV/SLF/ STW	In progress	In progress	MSC 86/26, paragraph 23.32; DE 57/25, section 11
5.2.1.20	Non-mandatory instruments: protection against noise on board ships	2012	MSC	DE		Completed		MSC 83/28, paragraph 25.41; DE 56/25, section 11

SUB-COMMITTEE ON SHIP DESIGN AND EQUIPMENT								
Planned output number in the HLAP for 2012-2013	**Description**	**Target completion year**	**Parent organ(s)**	**Coordinating organ(s)**	**Associated organ(s)**	**Status of output for Year 1**	**Status of output for Year 2**	**References**
5.2.1.21	Classification of offshore industry vessels and consideration of the need for a non-mandatory code for offshore construction support vessels	~~2013~~ 2015	MSC	DE		In progress	In progress	MSC 85/26, paragraph 23.27; DE 57/25, section 12
5.2.1.24	Revision of testing requirements for lifejacket RTDs in resolution MSC.81(70)	2013	MSC	DE		In progress	Completed	MSC 88/26, paragraph 23.32; DE 57/25, section 13
5.2.1.25	Development of guidelines for wing-in-ground craft	~~2013~~ 2015	MSC	DE	FP/ COMSAR/ NAV/SLF/ STW	In progress	In progress	MSC 88/26, paragraph 23.30; DE 57/25, section 14
5.2.1.27	Revision of the Recommendation on conditions for the approval of servicing stations for inflatable liferafts (resolution A.761(18))	~~2013~~ 2014	MSC	DE		In progress	In progress	MSC 87/26, paragraph 24.30; DE 57/25, section 15
5.2.1.28	Amendments to SOLAS regulation II-1/11 and development of associated Guidelines to ensure the adequacy of testing arrangements for watertight compartments	~~2013~~ 2015	MSC	DE		In progress	In progress	MSC 86/26, paragraph 23.36; DE 57/25, section 16
5.2.1.31 (UO)	Development of requirements for onboard lifting appliances and winches	~~2014~~ 2015	MSC	DE			In progress	MSC 89/25, paragraph 22.26 DE 57/25, section 18

SUB-COMMITTEE ON SHIP DESIGN AND EQUIPMENT								
Planned output number in the HLAP for 2012-2013	**Description**	**Target completion year**	**Parent organ(s)**	**Coordinating organ(s)**	**Associated organ(s)**	**Status of output for Year 1**	**Status of output for Year 2**	**References**
5.2.1.33 (UO)	Development of amendments to SOLAS regulations II-1/29.3.2 and 29.4.2 clarifying the requirements for steering gear trials	2013	MSC	DE			Completed	MSC 90/28, paragraph 25.33; DE 57/25, section 20
5.2.1…	Carriage of more than 12 industrial personnel on board vessels engaged on international voyages	2014	MSC	DE				DE 57/25, paragraph 12.9
7.1.2.3	Provision for the reduction of noise from commercial shipping and its adverse impacts on marine life	2013	MEPC	DE		In progress	Completed	MEPC 58/23, paragraph 19.6; DE 57/25, section 17
7.1.2.14	Revision of the Revised guidelines on implementation of effluent standards and performance tests for sewage treatment plants (resolution MEPC.159(55))	2012	MEPC	DE		Completed		MEPC 61/24, paragraph 7.36; DE 56/25, section 19
12.1.2	Casualty analysis	Continuous	MSC MEPC	DE				

***

ANNEX 19

DRAFT AMENDMENTS TO THE 2011 ESP CODE

ANNEX A
CODE ON THE ENHANCED PROGRAMME OF INSPECTIONS DURING SURVEYS OF BULK CARRIERS

Part A
CODE ON THE ENHANCED PROGRAMME OF INSPECTIONS DURING SURVEYS OF BULK CARRIERS HAVING SINGLE-SIDE SKIN CONSTRUCTION

1 – General

1 At the end of paragraph 1.2.6, the following sentence is added:

"For transversely framed bulk carriers, a transverse section includes adjacent frames and their end connections in way of transverse sections."

2 In paragraph 1.2.7, the words "structural areas" are inserted between the words "identifiable critical" and "and/or suspect areas".

3 At the end of paragraph 1.2.9, the words "a gauged (or measured) thickness between t_{net} + 0.5 mm and t_{net}" are replaced by the words "a measured thickness between t_{ren} + 0.5mm and t_{ren}. Renewal thickness (t_{ren}) is the minimum allowable thickness, in mm, below which renewal of structural members is to be carried out."

4 In paragraph 1.2.11 the figure "10" is inserted between the words "hard scale at" and "per cent".

5 At the beginning of paragraph 1.2.17, the words "*Special consideration*" are inserted before the words "or *specially considered*".

6 The following new paragraph 1.2.18 is added after existing paragraph 1.2.17:

"1.2.18 *Pitting corrosion* is defined as scattered corrosion spots/areas with local material reductions which are greater than the general corrosion in the surrounding area. Pitting intensity is defined in figure 2 of annex 15."

7 The following new paragraph 1.3.3 is added after existing paragraph 1.3.2:

"1.3.3 Where the damage found on the structure mentioned in paragraph 1.3.1 above is isolated and of a localized nature which does not affect the ship's structural integrity [(as for example a localized, isolated and very minor hole in a cross-deck strip)], consideration may be given by the surveyor to allow an appropriate temporary repair to restore watertight or weather tight integrity [after careful evaluation of the surrounding structure] and impose an associated condition of classification or recommendation with a specific [short term] time limit in order to complete the repair and retain classification."

2 – Renewal survey

8 At the end of paragraph 2.1.2, the following sentence is added:

"When the renewal survey is commenced prior to the fourth annual survey, the entire survey is to be completed within 15 months if such work is to be credited to the renewal survey."

9 The following new paragraph 2.3.3 is added after existing paragraph 2.3.2:

"2.3.3 For bulk carriers built under IACS Common Structural Rules (CSR), the identified substantial corrosion areas may be:

.1 protected by coating applied in accordance with the coating manufacturer's requirements and examined at annual intervals to confirm the coating in way is still in good condition; or alternatively

.2 required to be measured at annual intervals."

3 – Annual survey

10 At the end of paragraphs 3.4.1.3, 3.4.2.3 and 3.5, the following sentence is added:

"For bulk carriers built under the IACS Common Structural Rules, the annual thickness gauging may be omitted where a protective coating has been applied in accordance with the coating manufacturer's requirements and is maintained in good condition;"

4 – Intermediate survey

11 In the second sentence of paragraph 4.2.1.3, the words "hard protective" are inserted between the words "breakdown of" and "coating".

12 At the end of paragraph 4.2.3.3, the following new sentence and explanatory note are added:

"For bulk carriers built under IACS Common Structural Rules, the identified substantial corrosion areas may be:

.1 protected by coating applied in accordance with the coating manufacturer's requirements and examined at annual intervals to confirm the coating in way is still in good condition; or alternatively

.2 required to be measured at annual intervals."

Explanatory note:

For existing bulk carriers, where owners may elect to coat or recoat cargo holds as noted above, consideration may be given to the extent of the close-up and thickness measurement surveys. Prior to the coating of cargo holds of existing ships, scantlings should be ascertained in the presence of a surveyor."

13 The following new paragraph 4.2.3.4 is added after existing paragraph 4.2.3.3:

"4.2.3.4 Where hard protective coating is fitted in cargo holds and is found in GOOD condition, the extent of the close-up surveys and thickness measurements may be specially considered."

6 – Documentation on board

14 At the end of paragraph 6.3.2, the following text is added:

"(for CSR bulk carriers, these plans are to include for each structural element both the as-built and renewal thickness. Any thickness for voluntary addition is also to be clearly indicated on the plans. The midship section plan to be supplied on board the ship is to include the minimum allowable hull girder sectional properties for hold transverse section in all cargo holds)."

Part B
CODE ON THE ENHANCED PROGRAMME OF INSPECTIONS DURING SURVEYS OF BULK CARRIERS HAVING DOUBLE-SIDE SKIN CONSTRUCTION

1 – General

15 At the end of paragraph 1.2.6, the following sentence is added:

"For transversely framed bulk carriers, a transverse section includes adjacent frames and their end connections in way of transverse sections."

16 At the end of paragraph 1.2.9, the words "a gauged (or measured) thickness between t_{net} + 0.5 mm and t_{net}" are replaced by the words "a measured thickness between t_{ren} + 0.5mm and t_{ren}. Renewal thickness (t_{ren}) is the minimum allowable thickness, in mm, below which renewal of structural members is to be carried out.".

17 At the beginning of paragraph 1.2.17, the words "*Special consideration*" are inserted before the works "or *specially considered*".

18 The following new paragraph 1.3.3 is added after the existing paragraph 1.3.2:

"1.3.3 Where the damage found on the structure mentioned in paragraph 1.3.1 above is isolated and of a localized nature which does not affect the ship's structural integrity [(as for example a localized, isolated and very minor hole in a cross-deck strip)], consideration may be given by the surveyor to allow an appropriate temporary repair to restore watertight or weather tight integrity [after careful evaluation of the surrounding structure] and impose an associated condition of classification or recommendation with a specific [short term] time limit in order to complete the repair and retain classification."

2 – Renewal survey

19 At the end of paragraph 2.1.2, the following sentence is added:

"When the renewal survey is commenced prior to the fourth annual survey, the entire survey is to be completed within 15 months if such work is to be credited to the renewal survey."

20 The following new paragraph 2.3.3 is added after the existing paragraph 2.3.2:

"2.3.3 For bulk carriers built under IACS Common Structural Rules (CSR), the identified substantial corrosion areas may be:

.1 protected by coating applied in accordance with the coating manufacturer's requirements and examined at annual intervals to confirm the coating in way is still in good condition; or alternatively

.2 required to be measured at annual intervals."

3 – Annual survey

21 At the end of paragraphs 3.4.1.2, 3.4.2.2 and 3.5, the following sentence is added:

"For bulk carriers built under the IACS Common Structural Rules, the annual thickness gauging may be omitted where a protective coating has been applied in accordance with the coating manufacturer's requirements and is maintained in good condition;"

4 – Intermediate survey

22 At the end of paragraph 4.2.3.3, the following new sentence and explanatory note are added:

"For bulk carriers built under IACS Common Structural Rules, the identified substantial corrosion areas may be:

.1 protected by coating applied in accordance with the coating manufacturer's requirements and examined at annual intervals to confirm the coating in way is still in good condition; or alternatively

.2 required to be measured at annual intervals."

Explanatory note:

For existing bulk carriers, where owners may elect to coat or recoat cargo holds as noted above, consideration may be given to the extent of the close-up and thickness measurement surveys. Prior to the coating of cargo holds of existing ships, scantlings should be ascertained in the presence of a surveyor."

6 – Documentation on board

23 At the end of paragraph 6.3.2, the following text is added:

"(for CSR bulk carriers, these plans are to include for each structural element both the as-built and renewal thickness. Any thickness for voluntary addition is also to be clearly indicated on the plans. The midship section plan to be supplied on board the ship is to include the minimum allowable hull girder sectional properties for hold transverse section in all cargo holds)."

ANNEX B
CODE ON THE ENHANCED PROGRAMME OF INSPECTIONS DURING SURVEYS OF OIL TANKERS

Part A
CODE ON THE ENHANCED PROGRAMME OF INSPECTIONS DURING SURVEYS OF DOUBLE-HULL OIL TANKERS

1 – General

24 At the end of paragraph 1.2.6, the following sentence is added:

"For transversely framed oil tankers, a transverse section includes adjacent frames and their end connections in way of transverse sections."

25 In paragraph 1.2.7, the words "structural areas" are inserted between the words "identifiable critical" and "and/or suspect areas".

26 At the end of paragraph 1.2.9, the words "a gauged (or measured) thickness between t_{net} + 0.5 mm and t_{net}" are replaced by the words "a measured thickness between t_{ren} + 0.5mm and t_{ren}. Renewal thickness (t_{ren}) is the minimum allowable thickness, in mm, below which renewal of structural members is to be carried out.".

27 In the first sentence of paragraph 1.2.10, the word "protective" is inserted between the words "full hard" and "coating".

28 At the beginning of paragraph 1.2.16, the words "*Special consideration*" are inserted before the words "or *specially considered*".

29 At the end of paragraph 1.3.1.5, the words "(combination carriers)" are added.

30 The following new paragraph 1.3.3 is added after existing paragraph 1.3.2:

"1.3.3 Where the damage found on the structure mentioned in paragraph 1.3.1 above is isolated and of a localized nature which does not affect the ship's structural integrity [(as for example a localized, isolated and very minor hole in a cross-deck strip)], consideration may be given by the surveyor to allow an appropriate temporary repair to restore watertight or weather tight integrity [after careful evaluation of the surrounding structure] and impose an associated condition of classification or recommendation with a specific [short-term] time limit in order to complete the repair and retain classification."

2 – Renewal survey

31 At the end of paragraph 2.2.1, the following sentence is added:

"When the renewal survey is commenced prior to the fourth annual survey, the entire survey is to be completed within 15 months if such work is to be credited to the renewal survey."

32 The following new paragraph 2.1.6 is added after existing paragraph 2.1.5:

"2.1.6 Concurrent crediting to both intermediate survey and renewal survey for surveys and thickness measurements of spaces should not be acceptable."

33 At the end of paragraph 2.2.1, the following sentence and note are added:

"An extension of inspection of the outside of the ship's bottom of three months beyond the due date can be granted in exceptional circumstances.

Note: "Exceptional circumstances" means unavailability of dry-docking facilities; unavailability of repair facilities; unavailability of essential materials, equipment or spare parts; or delays incurred by action taken to avoid severe weather conditions."

34 At the end of paragraph 2.5.2, the words "should have thickness measurements taken." are replaced by the words "are to be examined. Areas of substantial corrosion identified at previous surveys are to have thickness measurements taken".

3 – Annual survey

35 At the beginning of paragraph 3.1, the following sentence is added:

"Annual surveys are to be held within three months before or after the anniversary date from the date of the initial classification survey or of the date credited for the last renewal survey."

36 At the end of paragraph 3.5.2, the following sentence is added:

"For oil tankers built under IACS Common Structural Rules, the identified substantial corrosion areas are required to be examined and additional thickness measurements are to be carried out."

37 The following new paragraph 4.1.4 is added after existing paragraph 4.1.3 and the existing paragraph 4.1.4 is renumbered as 4.1.5:

"4.1.4 For oil tankers built under IACS Common Structural Rules, the identified substantial corrosion areas are required to be examined and additional thickness measurements are to be carried out."

6 – Documentation on board

38 At the end of paragraph 6.3.2, the following text is added:

"(for CSR ships these plans are to include for each structural element both the as-built and renewal thickness. Any thickness for voluntary addition is also to be clearly indicated on the plans. The midship section plan to be supplied on board the ship is to include the minimum allowable hull girder sectional properties for the tank transverse section in all cargo tanks)."

Part B
CODE ON THE ENHANCED PROGRAMME OF INSPECTIONS DURING SURVEYS OF OIL TANKERS OTHER THAN DOUBLE-HULL OIL TANKERS

1 – General

39 At the end of paragraph 1.2.5, the following sentence is added:

"For transversely framed oil tankers, a transverse section includes adjacent frames and their end connections in way of transverse sections."

40 In paragraph 1.2.6, the words "structural areas" are inserted between the words "identifiable critical" and "and/or suspect areas".

41 At the beginning of paragraph 1.2.15, the words "*Special consideration*" are added before the words "or *specially considered*".

42 The following new paragraph 1.3.3 is added after the existing paragraph 1.3.2:

"1.3.3 Where the damage found on structure mentioned in paragraph 1.3.1 above is isolated and of a localized nature which does not affect the ship's structural integrity [(as for example a localized, isolated and very minor hole in a cross-deck strip)], consideration may be given by the surveyor to allow an appropriate temporary repair to restore watertight or weather tight integrity [after careful evaluation of the surrounding structure] and impose an associated condition of classification or recommendation with a specific [short term] time limit in order to complete the repair and retain classification."

2 – Renewal survey

43 At the end of paragraph 2.1.1, the following sentence is added:

"When the renewal survey is commenced prior to the fourth annual survey, the entire survey is to be completed within 15 months if such work is to be credited to the renewal survey."

44 The following new paragraph 2.1.7 is added after existing paragraph 2.1.6:

"2.1.7 Concurrent crediting to both intermediate survey and renewal survey for surveys and thickness measurements of spaces should not be acceptable."

45 At the end of paragraph 2.2.1, the following sentence and note are added:

"An extension of inspection of the outside of the ship's bottom of three months beyond the due date can be granted in exceptional circumstances.

Note: "Exceptional circumstances" means unavailability of dry-docking facilities; unavailability of repair facilities; unavailability of essential materials, equipment or spare parts; or delays incurred by action taken to avoid severe weather conditions."

46 At the end of paragraph 2.5.2, the words "should have thickness measurements taken" are replaced by the words "are to be examined. Areas of substantial corrosion identified at previous surveys are to have thickness measurements taken."

3 – Annual survey

47 At the beginning of paragraph 3.1, the following sentence is added:

"Annual surveys are to be held within three months before or after the anniversary date from the date of the initial classification survey or of the date credited for the last renewal survey."

6 – Documentation on board

48 At the end of paragraph 6.3.1, the following text is added:

"(for CSR ships these plans are to include for each structural element both the as-built and renewal thickness. Any thickness for voluntary addition is also to be clearly indicated on the plans. The midship section plan to be supplied on board the ship is to include the minimum allowable hull girder sectional properties for hold transverse section in all cargo holds)."