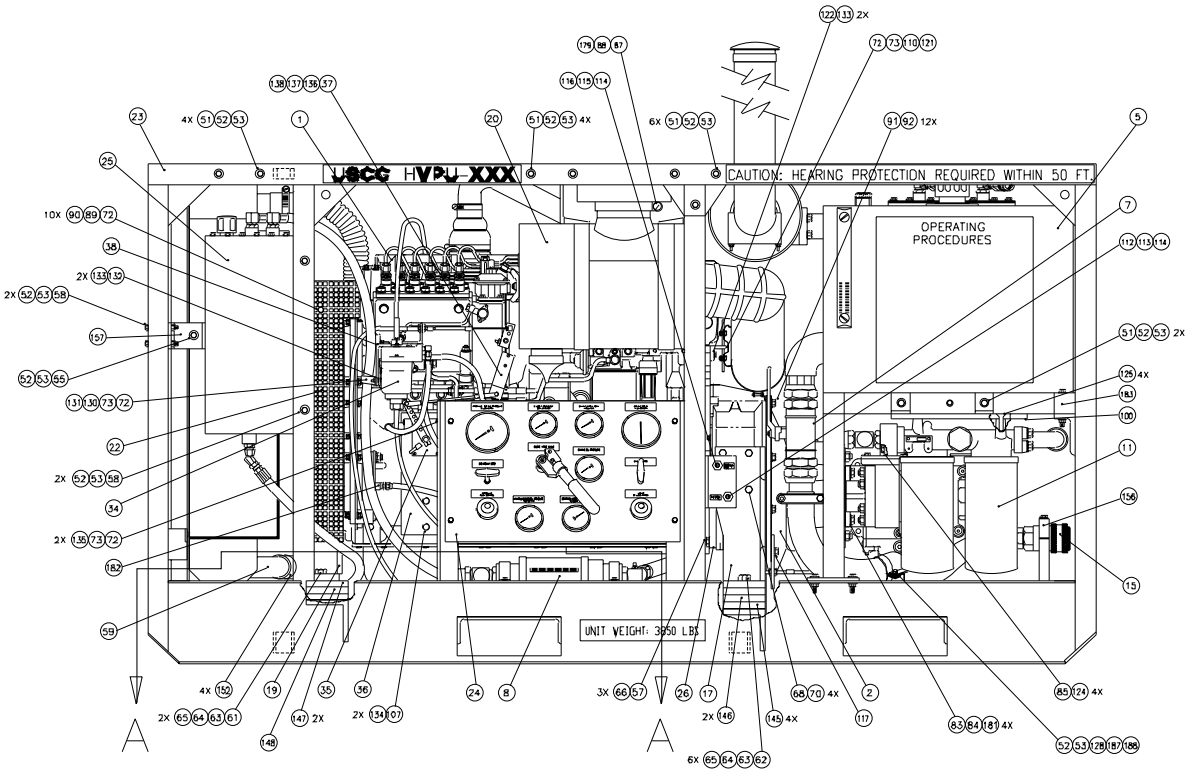

FRONT VIEW

SIZE	CAGE CODE	DWN	DRAWING NO.	REV
F	OMWHO		82647CG	–

SCALE: 1"=4" SHEET 2 OF 7 CADD