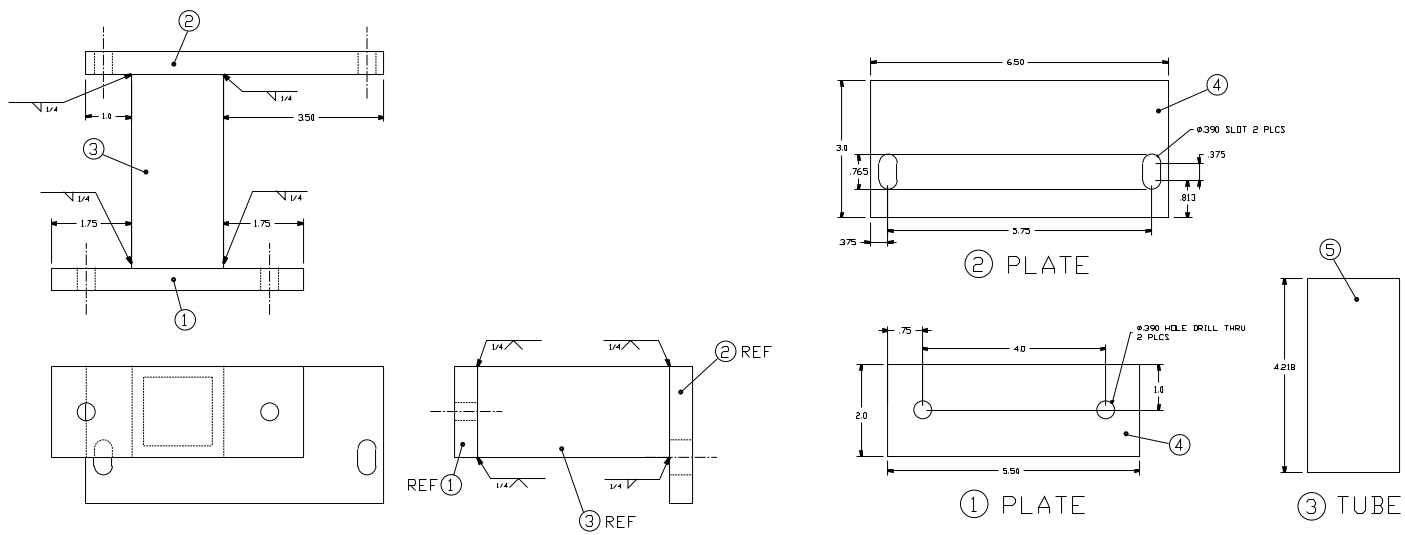


RADIATOR
LEFT SUPPORT
ASSEMBLY

| FIND NO. | QTY REQD | CAGE CODE | PART OR IDENTIFYING NO. | NOMENCLATURE OR DESCRIPTION | MATERIAL OR NOTE |
|---|---|---|---|---|---|
| 5 | AR | | | 2" SQUARE TUBE, .250 WALL | 6061-T6 |
| 4 | AR | | | 1/2" PLATE | 6061-T6 |
| 3 | 1 | OMWHO | -3 | TUBE | 6061-T6 |
| 2 | 1 | OMWHO | -2 | PLATE | |
| 1 | 1 | OMWHO | -1 | PLATE | |

PARTS LIST

HIGHSTAR INDUSTRIAL TECHNOLOGIES
3301-A BALLARD AVENUE, PORTSMOUTH, VA 23701

U.S. COAST GUARD HEADQUARTERS
CIVIL ENGINEERING

UNLESS OTHERWISE SPECIFIED:
DIMENSIONS ARE IN INCHES AND DEGREES
GENERAL TOLERANCES:
.X DECIMAL ± .06 | .XX DECIMAL ± .03 | .XXX DECIMAL ± .010 | ANGLE ±.2°
REMOVE BURRS AND BREAK SHARP EDGES .03 MAX.
INSIDE CORNERS R .06 MAX.
SURFACE ROUGHNESS 125/
FRACTIONS ±1/16

| | |
|---|---|
| DESIGNED: | L MURPHY |
| DRAWN: | D OLSON |
| TRACED: | |
| CHECKED: | L MURPHY |
| REVIEWED BY | |
| APPROVED BY | GARY VAN NOURIK |
| E-SEC | |
| CAD FILE NO. | 8114-1CG |
| DATE: | 2-10-97 |

MATERIAL: N/A

MODEL 82647CG HVPU
RADIATOR
LEFT SUPPORT

| SIZE | CAGE CODE | DRAWING NO | REV |
|---|---|---|---|
| D | OMWHO | 826114CG | — |

SCALE 1"=1" SHEET 1 OF 1 CADD

DRAWING NO 826114CG SHT 1 REV —

REVISIONS

| ZONE | REV | DESCRIPTION | DATE | APPROVED |
|---|---|---|---|---|