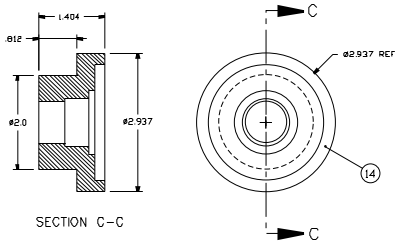

1 END CAP

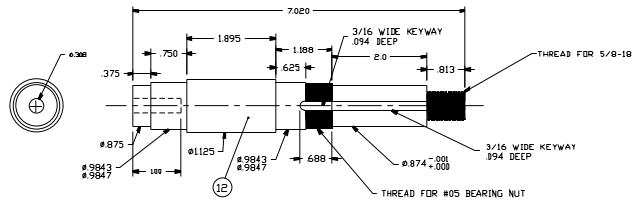

4 SHAFT A

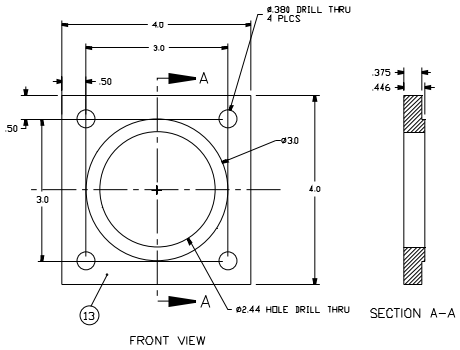

2 PLATE

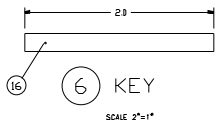

6 KEY

SCALE 2"=1"

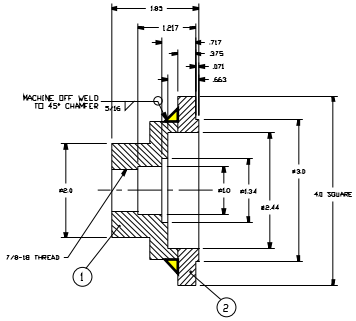

END CAP AND PLATE ASSEMBLY 1

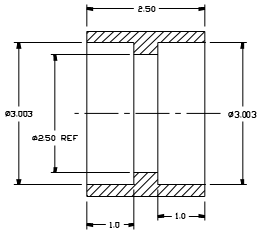

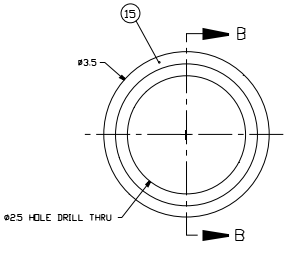

3 SPACER

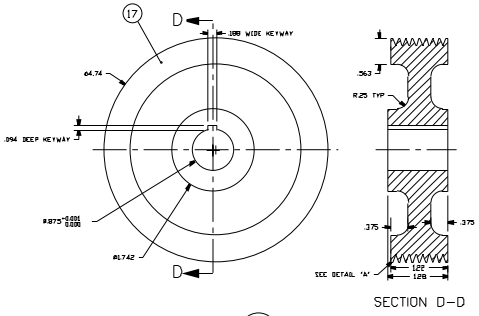

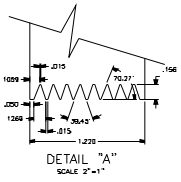

5 SHEAVE

SIZE	CAGE CODE	SHEET	DRAWING NO	REV
F	OMWHO		826070CG	A
SCALE 1"=1"			SHEET 2 OF 2	CADD

826070CG