NOTES:

1. WELDING TO BE IN ACCORDANCE WITH AWS D1.2.

PARTS LIST					
FIND NO.	QTY REQD	CAGE CODE	PART OR IDENTIFYING NO	NOMENCLATURE OR DESCRIPTION	MATERIAL OR NOTE
1	1 LF		COMMERCIAL	PIPE, 6" SCH. 40	AL 6061-T6
2	2		COMMERCIAL	FLANGE, 6", ANSI 150#	AL
3	2		COMMERCIAL	RING GASKET, 6"-150#, 1/16 THK	BUNA-N

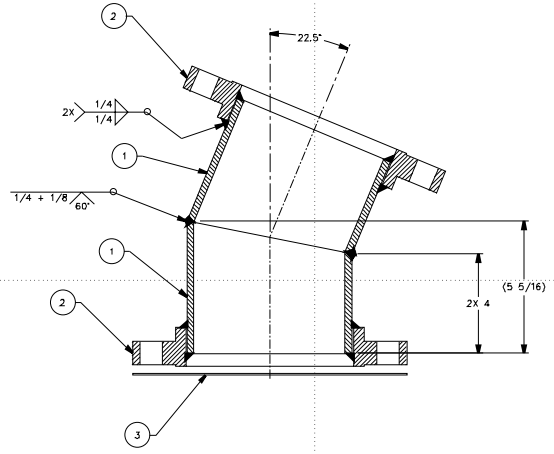

UNLESS OTHERWISE SPECIFIED:
ALL DIMENSIONS ARE IN INCHES.
TOLERANCES: DIM. 1/4
ANG. .5°

GPC – A JOINT VENTURE
WILLIAMSBURG, VA
757-887-7402

CONSULTANTS

DEPARTMENT OF THE NAVY
NAVAL SEA SYSTEMS COMMAND
WASHINGTON, D.C. 20362

SITE LOCATION
WAREHOUSE # 12
CHEATHAM ANNEX
WILLIAMSBURG, VA.
23185

NAVSEA DWG NO:
7022712

U. S. COAST GUARD
OCEAN ENGINEERING DIV.
WASHINGTON, DC

USCG. COMDT G-SEC-2
2100 2ND STREET SW
WASHINGTON, DC 20593-0001

ISSUE

MARK	DATE	DESCRIPTION

REFER TO NAVSEA DWG FOR REVISIONS

A/E PROJECT NO: N00024-96-D-4107
CAD FILE NAME: Z17706D01.DWG
DESIGNED BY: C. MOFFATT 1/28/00
DRAWN BY: R. NAZARETH 1/28/00
EDITED BY:
CHECKED BY: C. MOFFATT 1/28/00

SCALE: PLOT SCALE 1=1

SHEET TITLE

VISCOUS OIL PUMPING SYSTEM
G-SEC-2C
WASHINGTON DC
22.5° ANSI FLANGED ELBOW

ASSEMBLY

REVIEWED BY: PCN PROJECT ENG.	REVIEWED BY: BS BRANCH CHIEF	REVIEWED BY: RML G-SEC-2
W.P. LAYNE, CAPT, USCG CHIEF, CIVIL ENG		03/15/01 DATE

PROJECT NUMBER	DRAWING NUMBER
	177006
DISCIPLINE/SHT NO Z17706D01	SHEET 1 OF 1