SYSTEM NOTES:

1. USE A MAXIMUM OF (8) 35 WATT SOLAR PANELS.
2. LTB MAY BE USED TO CONNECT SOLAR PANELS TO RPB.
3. CAT V LOAD CENTER CIRCUIT BREAKER PROTECTION IS 20 AMPS.
4. USE LOW VOLTAGE DROP KIT IF VOLTAGE DROP EXCEEDS 0.35V. REFER TO COMDTINST M16500.24 FOR CALCULATIONS.
5. ALL WIRE RUNS SHALL BE ENCLOSED IN RIGID CONDUIT OR LIQUID–TIGHT FLEX CONDUIT TO FORM A WEATHERTIGHT SYSTEM AND PROTECT ELECTRICAL COMPONENTS FROM THE ELEMENTS. SELECTED CONDUIT TYPE AND FITTINGS (PVC, RIGID STEEL, PVC COATED RIGID STEEL, STAINLESS STEEL LIQUIDTIGHT FLEX) SHALL BE SUITABLE FOR THE SPECIFIC ENVIRONMENT IN WHICH IT WILL BE INSTALLED.

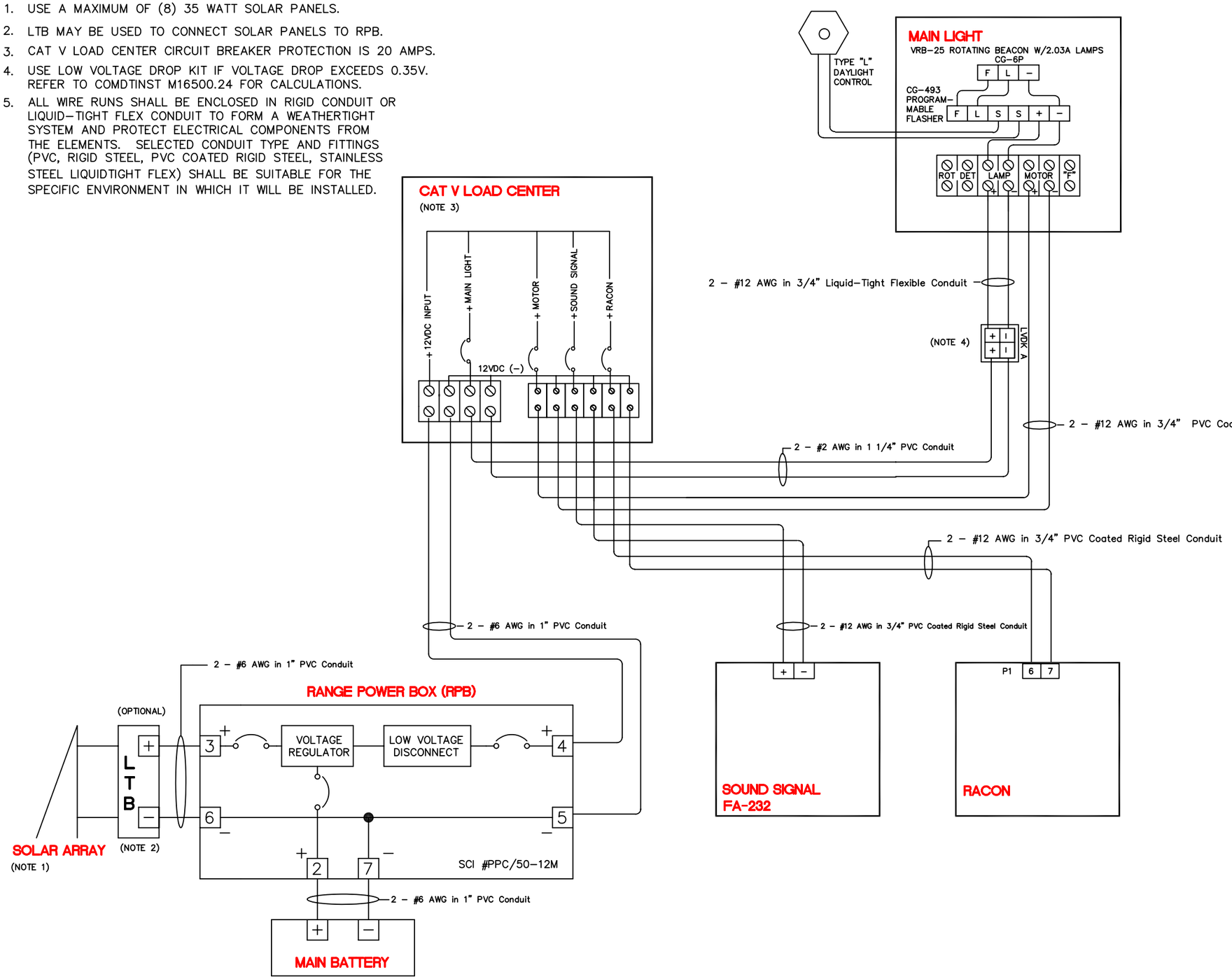

POINT TO POINT WIRE RUNNING LIST

FROM	WIRE SIZE (AWG)	MAXIMUM DISTANCE	TO
SOLAR PANEL (+)	18	12	LTB (+)
SOLAR PANEL (–)	18	12	LTB (–)
LTB (+)	6	24	RPB 3 (+)
LTB (–)	6	24	RPB 6 (–)
RPB 2 (+)	6	12	MAIN BATTERY (+)
RPB 7 (–)	6	12	MAIN BATTERY (–)
RPB 4 (+)	6	12	LC 12VDC INPUT (+)
RPB 5 (–)	6	12	LC 12VDC INPUT (–)
LC 12VDC MAIN LIGHT (+)	2	150	LVDK (+)
LC 12VDC MAIN LIGHT (–)	2	150	LVDK (–)
LVDK (+)	12	2.5	VRB LAMP (+)
LVDK (–)	12	2.5	VRB LAMP (–)
LC MOTOR (+)	12	150	VRB MOTOR (+)
LC MOTOR (–)	12	150	VRB MOTOR (–)
LC SOUND SIGNAL (+)	12	30	SOUND SIGNAL (+)
LC SOUND SIGNAL (–)	12	30	SOUND SIGNAL (–)
LC RACON (+)	12	40	RACON P1 6
LC RACON (–)	12	40	RACON P1 7

BILL OF MATERIALS

ITEM	TYPE	SOURCE OF SUPPLY
ROTATING BEACON, 12VDC	VRB–25	G–SEC–2
PROGRAMMABLE FLASHER	CG–493	ELC
LAMPCHANGER	CG–6P	ELC
DAYLIGHT CONTROL	TYPE–L	ELC
LOW VOLTAGE DROP KIT	LVDK	G–SEC–2
CAT V LOAD CENTER	LC–1	G–SEC–2
RACON	SEABEACON II	G–SCE–2
SOUND SIGNAL	FA–232	AUTOMATIC POWER, INC.
RANGE POWER BOX	RPB–DC	G–SEC–2
BATTERY	FULMEN	GNB
LOCAL TERMINAL BOX	LTB	G–SEC–2
SOLAR PANELS (35W)	G–SEC QPL 401A	ELC

REV.	DATE	APPR.	DESCRIPTION	BY

DESIGNED: KMD
DRAWN: KMD
TRACED:
CHECKED: JTG
REVIEWED BY: KEITH DAVIS
PROJECT ENGINEER
REVIEWED BY:

U.S. COAST GUARD HEADQUARTERS
CIVIL ENGINEERING

STANDARD AID TO NAVIGATION
SOLAR CATEGORY III
SOLAR LIGHTHOUSE
SMALL POWER SYSTEM

REVIEWED BY: JTG G–SEC–2A
APPROVED: H. R. CLEVELAND CHIEF, OCEAN ENGINEERING DIVISION
DATE 5/15/03

UNLESS OTHERWISE SPECIFIED:
ALL DIMENSIONS ARE IN INCHES.
TOLERANCES: DIM.
ANG.

DRAWING NUMBER 140414
REV.
SCALE: NONE
SHEET 1 OF 1

PLOTTING SCALE: