T47
7332
Aug
1961

UNITED STATES COAST GUARD

ADDRESS REPLY TO:
COMMANDANT
U.S. COAST GUARD
HEADQUARTERS
WASHINGTON 25, D.C.

OAV
4 August 1961

STANDARD AIRCRAFT CHARACTERISTICS

(CG-332)

AMENDMENT NO. 2

1. Standard Aircraft Characteristics (CG-332) is amended as follows, effective upon receipt:

a. Remove all pages of VP(LRS) section, including the index tab.

b. In VP(MRA) section, remove all sheets (4) pertaining to UF-1G.

c. In VR(SS) section, remove all sheets (3) pertaining to R4D-5.

d. Remove the following pages and insert new pages dated 14 April 1961:

Introduction - Pages i/ii, iii/reverse blank
Classification of Aircraft - One page/reverse blank
SC-130B - Title page and Mission and Description page
R5D - Title page
UF-2G - Title page
C-123B - Title page and Mission and Description page
RM-1Z - Title page and Mission and Description page
HUS-1G - Title page and Mission and Description page
HUL-1G - Mission and Description page

e. Remove Performance Data Curves sheet for RM-1Z without replacement.

2. Summary of changes. This amendment deletes material describing aircraft no longer in the Coast Guard inventory and updates photographs and descriptive data on the remaining aircraft.

3. After entering this amendment, make an entry on the "Record of Amendments" page. Retain this Amendment Sheet in the front of the manual.

R. D. SCHMIDTMAN
Acting Chief, Office of Operations

Dist: Same as basic publication (1)

ADDRESS REPLY TO:
COMMANDANT
U. S. COAST GUARD
HEADQUARTERS
WASHINGTON 25, D. C.

INTRODUCTION

GENERAL: Publication CG-332 "U. S. COAST GUARD STANDARD AIRCRAFT CHARACTERISTICS," presents the official characteristics and performance data of U. S. Coast Guard aircraft on a readily comparable basis. The data presented herein are based on definitions and methods set forth in the latest revision of specification MIL-C-5011. This publication will be of value to rescue controllers, vessels in coordinated operations with aircraft and air units who may require Coast Guard aircraft performance data.

ISSUANCE: New and/or revised pages of publication CG-332 will be issued when new aircraft types are acquired, or when improved or additional data for existing types becomes available. Amendments will be serially numbered.

DEFINITIONS: Characteristics and performance data given on the charts are consistent with the following definitions and explanations:

GENERAL: The aircraft loadings for which performance data are given, are the loadings set forth in the specification to which the airplane was purchased. The airplane specification usually includes one or more basic missions for which the airplane is intended to be used. Performance is also presented for additional missions that have been assigned the airplane after purchase. Performance is given for standard atmospheric conditions in normal service configuration with external antennae, rotatable enclosure, bombay doors, etc., in position of least drag unless otherwise stated.

WEIGHTS: Empty weight excludes the weight of crew, fuel, oil, cargo, and disposable or special equipment.

Take-off weight includes all useful load items required to complete the basic mission.

MAXIMUM SPEED: Within operating restrictions, the highest speed obtainable in level flight at stated altitude and normal rated engine power.

CLIMB: Maximum rate of climb at normal rated engine power for the gross weight at the head of the column. The effects on rate of climb of weight reduction during climb is not considered. Time to climb considers the effects of weight reduction during ground operation and climb.

SERVICE CEILING: Service ceiling is the altitude at which the rate of climb is 100 ft/min. at stated weight and normal rated engine power. For helicopters, service ceiling is out of ground effect and in forward flight.

AVERAGE CRUISE SPEED: The average cruise speed is the total cruise distance divided by time for cruise. Distance and time in starting engines, take-off and climb are not included in calculating average cruise speed.

TAKE-OFF DISTANCE: Take-off distance is that normally obtainable in service operation by experienced pilots using best techniques. Sea-level hard-surface runways, standard atmospheric conditions and take-off power are assumed.

STALLING SPEED: Stalling speed in the landing condition based on maximum trimmed lift coefficient considered or proven to be practicable for the given configuration of wing and high-lift device. Power-on stalling speed includes only that amount of power required for level flight at 1.2 times the power-off stalling speed in the applicable landing condition.

RANGE: Range is computed in accordance with the following:

(a) Warm-up, taxi, and take-off: Fuel used is assumed to equal that consumed in 10 minutes of sea-level static operation at normal rated power.

(b) Climb: Fuel is further reduced by that required for climb on course to the cruise altitude, using normal rated power. Air speed is approximately that for best rate of climb.

(c) Cruise: Cruise out at stated altitude, using fuel remaining after deducting the fuel of (a) and (b) above, and reserve fuel of (d) below. Air speed is that for long range operation, and may be speed for maximum miles per gallon, or speed for 99% of maximum miles per gallon. Cargo, personnel, etc., are carried the entire flight but droppable external fuel tanks are dropped when empty.

(d) Reserve: Land with 5% of initial fuel remaining, plus fuel for ½ hour additional cruising. Let-down distance from cruising altitude is not counted as range, and is in effect, additional reserve.

(e) Range: Range is distance gained in climb plus cruise.

COMMUNICATIONS: The airborne electronics equipment listed for each type aircraft represents the "standard" installation. All aircraft in type may not have this installation; however, this will be corrected in modification. (See second page this introduction for explanation, description and performance of airborne electronics equipment used by the Coast Guard.)

A. C. Richmond
A. C. RICHMOND
Vice Admiral, U. S. Coast Guard
Commandant

DIST: (SDL NO. 67)
A: aacde(2)
B: e(4); bcgkl(2); dh(1); p(1)
C: a(3); b(2)
D: j(1)

17564 TREAS. CGHQ. WASH., D.C.

AIRBORNE ELECTRONICS EQUIPMENT USED IN THE COAST GUARD

The airborne electronics equipment used by the Coast Guard is listed in the following table together with a brief description of the function, purpose, range and frequency as applicable.

Inasmuch as the standard electronics configuration of each aircraft may not correspond to that indicated for each type because modification may not be completed, it is suggested that the user of this publication periodically verify the electronics configuration for aircraft operating in his locale. Discrepancies in the authorized configuration should be listed on the "NOTES" page for convenient reference.

NOMENCLATURE	FUNCTION	PURPOSE	RANGE	FREQUENCY
AIA-2A	Interphone	Intercommunication in Aircraft	Crew Stations within Aircraft	Audio
AIC-3	Interphone	Intercommunication in Aircraft	Crew Stations within Aircraft	Audio
AIC-4	Interphone	Intercommunication in Aircraft	Crew Stations within Aircraft	Audio
AIC-5	Interphone	Intercommunication in Aircraft	Crew Stations within Aircraft	Audio
AIC-10	Interphone	Intercommunication in Aircraft	Crew Stations within Aircraft	Audio
AIC-13	Public Address System	Announcements within Aircraft	Within Aircraft	Audio
AIC-14	Interphone	Intercommunication in Aircraft	Crew Stations within Aircraft	Audio
APA-89	IFF Coder	Selective Identification	-	-
APN-22	Altimeter	Indicates Altitude Above Terrain	0-10,000 Ft. Land 0-20,000 Ft. Water	4200 - 4400 Mc
APN-59B	Radar	Navigation and Search	0-200 Miles	9375 Mc
APN-70	Loran	Navigation	700 Mi Day, 1200 Mi Night	90-110, 170-190, 1700-2000 KC
APN-97	Radar Navigation	Detects and Displays a Hovering Condition	Maximum error 4% of Distance Traveled (Range Unlimited)	13,500 mcs
APN-117	Altimeter (Modified APN-22 for use with APN-97)	Indicates Altitude Above Terrain	0 to 20,000 Ft.	4200-4400 Mcs
APS-31	Radar	Navigation and Search	0-200 Miles	9375 Mc
APS-42	Radar	Navigation and Search	0-200 Miles	9375 Mc
APX-6	I.F.F.	Identifies Aircraft as Friend or Foe	Line of Sight	-
APX-28	I.F.F. Interrogator	I.F.F. Interrogator-Responder. Visual Indication of Range and Relative Azimuth	0 - 150 Miles	952 - 1100 Mc
ARA-25	UHF/VHF Homer	Homing on UHF/VHF Transmitter	Line of Sight	118-136, 225-400 Mc
ARC-27	UHF Command Radio	Plane to Ground and Plane to Plane Communications	Line of Sight	225 - 400 Mc
ARC-38	HF Liaison Communications	Plane to Ground - Ground to Plane Communications	25 Mi. to 2500 Mi. Depending on time Day, Altitude and Frequency	2 - 25 Mc
ARC-39	HF Liaison Communications	Plane to Ground - Ground to Plane Communications	25 - 500 Miles Depending on time Day, Altitude and Frequency	2 - 9.1 Mc
ARC-52	UHF Command Radio	Plane to Ground and Plane to Plane Communications	Line of Sight	225 - 400 Mc
ARC-55	UHF Command Radio	Plane to Ground and Plane to Plane Communications	Line of Sight	225 - 400 Mc
ARC-84	VHF Command Radio	Plane to Ground and Plane to Plane Communications	Line of Sight	(R)108-135.9; (T)118-135.9 Mc
ARN-5	Glide Slope Receiver	Receives Glide Slope Information for Vertical Guidance in I.L.S. Operation	15 Miles	332.6, 333.8, 335.0 Mc
AN/ARN-6	ADF	Homing and Bearings, also Receives Voice and Code	20 - 200 Mi.	100 - 1750 Kc
ARN-8	Marker Beacon Receiver	Receives Location Marker Signals on Navigation Beams	Limited Vicinity Marker	75 Mc
ARN-12	Marker Beacon Receiver	Receives Location Marker Signals on Navigation Beams	Limited Vicinity Marker	75 Mc
ARN-14	Omni-Range Receiver	Reception of All VHF Omni-Range, Tone Localizer and Voice Facilities in the 108-136 Mc Band	Localizer 45 Mi. Omni-100 Mi. Depending on Altitude	108 - 136 Mc
ARN-18	Glide Slope Receiver	Receiver Glide Slope Information for Vertical Guidance in I.L.S. Operation	15 Miles	329.3 - 335 Mc
ARN-21	Tacan	Navigation Interrogator Responder to Enable Continuous Indication of Distance and Bearing	Line of Sight up to 195 Mi.	962 - 1213 Mc
ARN-30	Omni-Range Receiver	VHF Omni-Range Tone, Localizer and Voice Facilities in the 108 - 135 Mc Band	Localizer 45 Mi. Omni - 100 Mi. Depending on Altitude	108 - 135 Mc

14 April 1961

NOMENCLATURE	FUNCTION	PURPOSE	RANGE	FREQUENCY
ARN-41B or C	ADF	Homing and Bearings. Also receives Voice and Code	20 - 200 Mi.	190 - 430 Kc 500 - 2850 Kc
ARN-44	ADF	Homing and Bearings. Also receives Voice and Code	20 - 200 Mi	200 - 1715 Kc 2000 - 3500 Kc
ART-13	H.F. Transmitter, Liaison	Air to Ground Ground to Air Communications	25 to 2500 Mi Depending on Time of Day Frequency and Altitude	.2 - 1.5 Mc 2.0 - 18.1 Mc
ART-33	MF Transmitter	MF Communication with Maritime Services (CW)	25 - 100 Mi.	400 - 535 Kc
ARR-11	MF-HF Receiver Liaison	Air Ground Communication	25 - 5000 Mi. Depending on Frequency and Time of Day	200 - 500 Kc 1.5 - 18 Mc
ARR-41	MF-HF Receiver Liaison	Air Ground Communications	25 - 5000 Mi. Depending on Frequency and Time of Day	190 - 550 Kc 2 - 25 Mc
CRT-3	Emergency Transmitter	Emergency Sea Rescue	5 - 1000 Mi. Depending on Frequency and Time of Day	500 Kc 8364 Kc
SCR-718	Altimeter	Indicates Altitude Above Terrain	40,000 Ft.	-----
URC-4	Emergency Transceiver	Emergency Sea Rescue	Line of Sight	121.5 Mc 243 Mc
URC-13	HF Transceiver	Air Ground Communications (Voice Only)	20 - 500 Mi. Depending on Frequency and Time of Day and Altitude	2-12 Mc
COLLINS 17-L-4 XMTR and 51X-1B Receiver	VHF Communications	Plane to Ground and Plane to Plane Communications	Line of Sight	118 - 135.95 Mc
PRC-32	Emergency Tranceiver	Emergency Sea Rescue	Line of Sight	243.0 Mc

STANDARD AIRCRAFT CHARACTERISTICS

CLASSIFICATION OF AIRCRAFT

COAST GUARD CLASSIFICATION	AIRCRAFT DESIGNATIONS				
	USCG/USN	USAF	USA	CIVIL	NAME
VP(LRL) - (Long Range Landplane)	SC-130B/GV-1	SC-130B	---	----	Hercules
	R5D-4	C-54	---	DC-4	Skymaster
VP(MRA) - (Medium Range Amphibian)	UF-2G	SA-16B	---	G-111	Albatross
VR(SS) - (Special Service)	C-123B	C-123B	---	----	Provider
	RM-1Z	---	---	Martin 4-0-4	
H(M) - (Medium Helicopter)	HUS-1G	H-34	H-34	S-58	---
	HO4S-3G	H-19 B&D	H-19 B&D	S-55A	---
H(L) - (Light Helicopter)	HUL-1G	H-13J	H-13J	Bell 47J	---
	HTL-5	H-13	H-13	Bell 47	---

14 April 1961

STANDARD AIRCRAFT CHARACTERISTICS
SC-130B "HERCULES"

LOCKHEED

14 April 1961

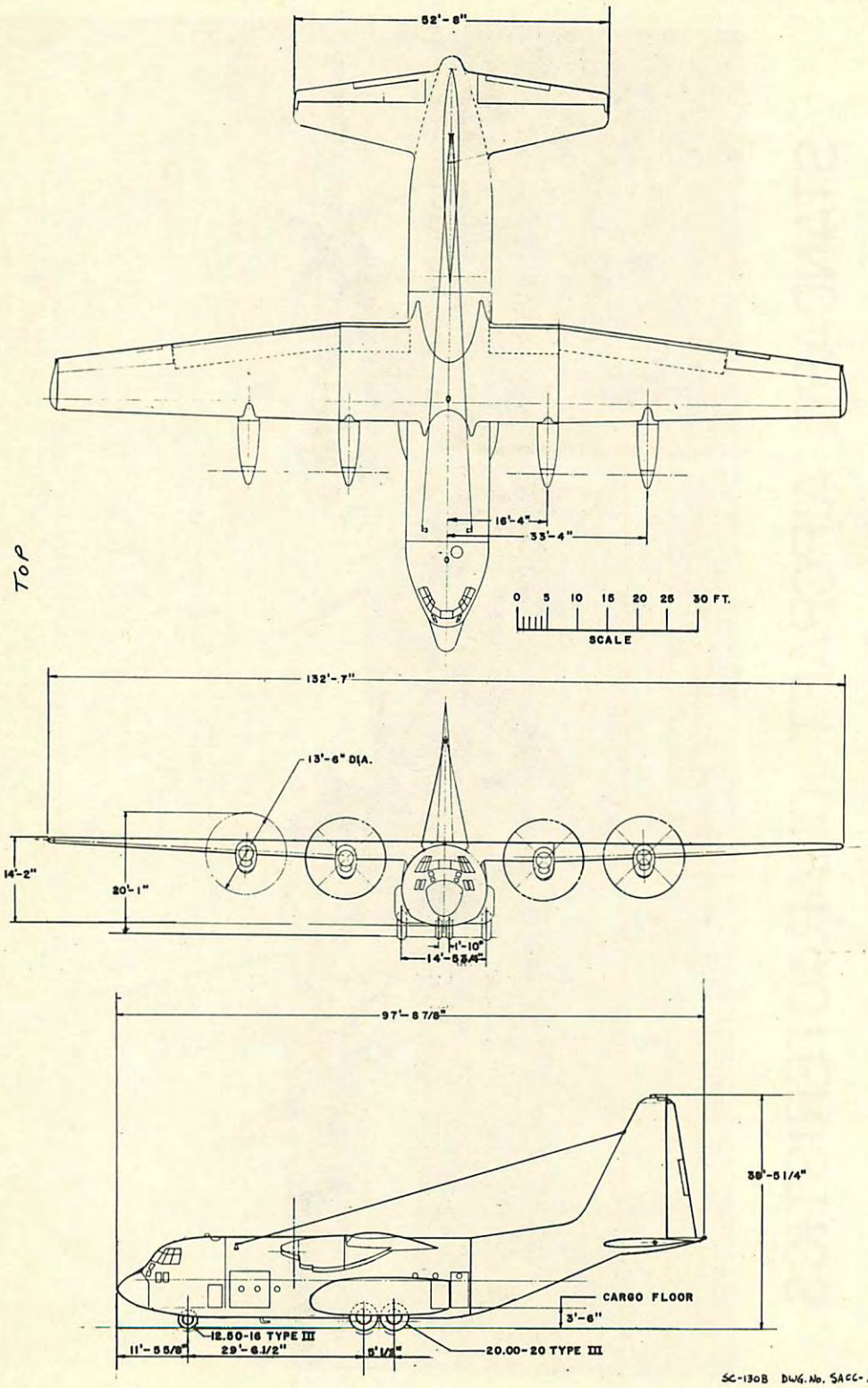
52'-8"
16'-4"
33'-4"
TOP
0 5 10 15 20 25 30 FT.
SCALE
132'-7"
13'-6" DIA.
14'-2"
20'-1"
1'-10"
14'-5 3/4"
97'-8 7/8"
38'-5 1/4"
CARGO FLOOR
3'-6"
12.50-16 TYPE III
20.00-20 TYPE III
11'-5 5/8"
29'-6 1/2"
5'1/2"
SC-130B DWG. No. SACC-2

SC-130B

POWER PLANT

NO. & MODEL. . . . . (4) T-56-A-7
MFR. . . . . ALLISON
PROP MFR. . . . HAMILTON STANDARD
PROP DES. NO. 54H60-63
NO. BLD/DIA . . . . . .4/13'-6"

RATINGS

	Bhp	@ Rpm	@ Alt
TAKEOFF	4050	13820	S.L.
NORMAL	2000	13820	25,000 ft.

ACCOMMODATIONS

Crew. 9
(Pilot, Co-pilot, Navigator, Flight engineer, Radioman, 4 observers)

Passenger seats 44

CARGO DOOR:

Aft Cargo Ramp Door. . . 9' x 10'
Fwd Cargo Door (LH). . 7' 3" x 6'1"

Floor Loading:

Normal. . . . . 1080 lbs/ft^2
Single axle loading of. 13,000 lbs.

Cargo storage space . . .3690 cu. ft.
Cargo space unobstructed:
9' high, 10' wide, 40' long

Door Sill 3'-6" above static ground line.

MISSION AND DESCRIPTION

The SC-130B is an all weather, high speed, long range, long endurance four engine turbo-propeller driven landplane. In the Coast Guard the primary mission of this aircraft is search and rescue. A secondary mission for which the aircraft is well suited is the transport of emergency equipment, personnel and cargo from unprepared as well as prepared runways.

This aircraft is manufactured by Lockheed Aircraft Corporation. It features a radome in the nose, a large cargo type fuselage, high-wing, tricycle landing gear, single vertical stabilizer.

Internal arrangement of this aircraft consists of a flight deck in the nose of the plane with the remainder of the fuselage, consisting of cargo and/or passenger space. The flight deck provides stations for the pilot, co-pilot, navigator, flight engineer, radioman and on-scene commander. The cargo compartment has stations for observers on each side and to the rear. A large cargo door is located in the rear of the fuselage with a smaller one in the front end of the cargo compartment.

Normal crew complement for a SAR mission is nine persons.

DIMENSIONS

WING AREA. . . . . 1746 sq. ft.
WING SPAN. . . . . 132'-7"
LENGTH . . . . . 97'-9"
HEIGHT . . . . . 38'-5"
TREAD . . . . . 14'-6"

WEIGHTS

Loadings	Lbs.
EMPTY	66,515
BASIC	
DESIGN.	135,000
MAX. T. O..	135,000
DESIGN LANDING.	118,000

FUEL AND OIL

Gals.	No. Tanks	Location
5,082	4	Outer wing
1,820	2	Center Sect.

FUEL GRADE. JP-4
FUEL SPEC.. . . . . MIL-F-5624

OIL

CAPACITY. 48
GRADE & SPEC.....MIL-L-7808 B

ELECTRONICS

ICS AIC-14
IFF APX-6B
IFF CODER APA-89
RADAR ALT APN-22
RADAR ALT SCR-718F
LORAN APN-70
RADAR APN-59B
IFF HOMER APX-28
UHF ARC-27
UHF/VHF HOMER ARA-25
VHF TRANS 17L
VHF REC 51XB
HF TRANSCEIVER (2 ea) ARC-38
MF/HF REC ARR-41
MF TRANS. ART-33
TACAN ARN-21
OMNI ARN-14
MARKER BEACON ARN-12
ADF (2) . . . . . ARN-6 & ARN-44
PA SYSTEM AIC-13
GLIDE SLOPE AN/ARN-18
SURVIVAL TRANSCEIVER (2 ea) AN/URC-4
SURVIVAL TRANSMITTER. AN/CRT-3

14 April 1961

PERFORMANCE SUMMARY

TAKE-OFF LOADING CONDITION			(1) LOGISTIC	(2) LOGISTIC	(3) SAR	(4) SAR	
TAKE-OFF WEIGHT		lb.	135,000	120,900	116,000	93,000	
Fuel	(C)	lb.	30,354	26,254	45,240	22,240	
Payload		lb.	35,000	25,000	--	--	
Wing loading		lb./sq.ft.	77.3	69.3	66.5	53.3	
Stall speed - power-off		kn.	94	89	87	79	
Take-off run at S.L. - calm		ft.	3,100	2,400	2,200	1,450	
Take-off run at S.L. kn. wind		ft.	--	--	--	--	
Take-off to clear 50 ft. - calm		ft.	4,160	3,200	2,950	2,050	
Max. speed/altitude	(A)	kn./ft.	316/15,000	317/17,500	318/18,500	322/23,000	
Rate of climb at S.L.	(A)	fpm.	1,800	2,100	2,200	3,200	
Time: S.L. to 10,000 ft.	(A)	min.	6.7	5.7	4.9	3.6	
Time: S.L. to 20,000 ft.	(A)	min.	17.0	14.0	11.9	8.5	
Service ceiling (100 fpm)	(A)	ft.	27,500	29,900	32,200	36,600	
Combat range		n.mi.	2,080	1,920	3,900	1,880	
Average cruising speed		kn.	286	272	248	240	
Cruising altitude(s)		ft.	25,000	25,000	25,000	25,000	
Search Time at 1000 mi. radius		hrs.			6.8	--	
Search Time at 500 mi. radius		hrs.			11.3	2.3	
COMBAT LOADING CONDITION							
COMBAT WEIGHT		lb.					
Engine power							
Fuel		lb.					
Combat speed/combat altitude		kn./ft.					
Rate of climb/combat altitude		fpm/ft.					
Combat ceiling (500 fpm)		ft.					
Rate of climb at S.L.		fpm.					
Max. speed at S.L.		kn.					
Max. speed/altitude		kn./ft.					
LANDING WEIGHT		lb.	107,432	98,430	74,238	73,070	
Fuel		lb.	3,119	2,783	3,462	2,312	
Stall speed - power-off		kn.	84	80	70	70	
Stall speed - with approach power		kn.					

NOTES

(A) Normal rated power.
(B) Performance is based on specification data and C-130A Flight Handbook adjusted.
(C) JP-4 at 6.5 lb. per gal. nominal.

1 April 1959

STANDARD AIRCRAFT CHARACTERISTICS

R5D-4 "SKYMASTER"

DOUGLAS

14 April 1961

TIRE PRESSURES

LOAD PER MAIN WHEEL	16,000	18,000	20,000
MAIN WHEEL PRESS.	71	80	89
NOSE WHEEL PRESS.	62	62	62

WING AREA - 1462 SQ. FT.
WING SECTION
N.A.C.A. 23016-23012
M.A.C. - 163.5"
PROP. - HAMILTON STD.
HYDROMATIC
BLADE DESIGN NO. 6507A-0
ASPECT RATIO 9.4

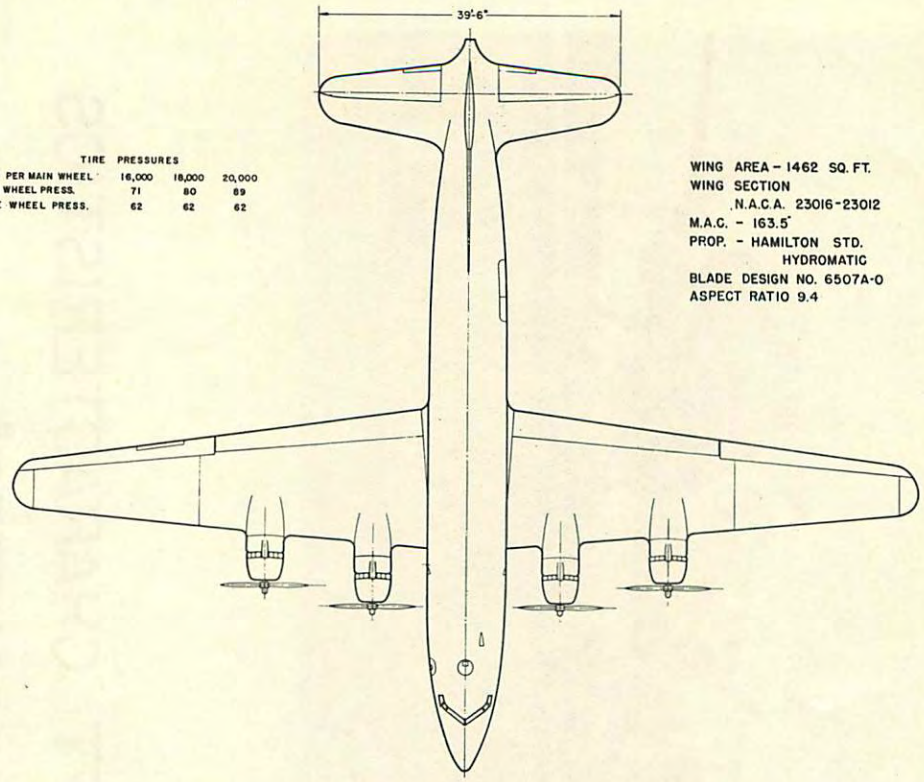

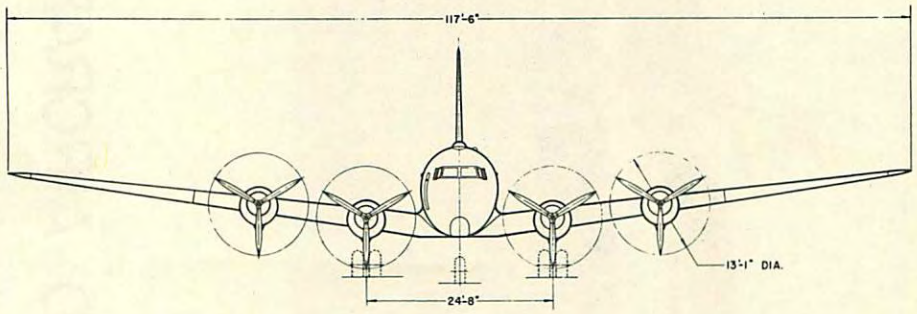

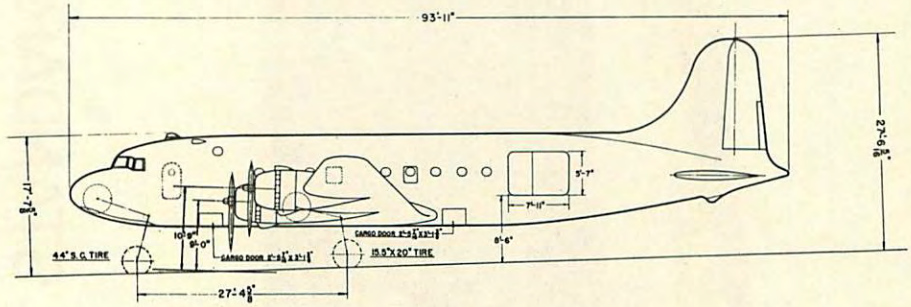

STANDARD AIRCRAFT CHARACTERISTICS

UF-2G "ALBATROSS"

GRUMMAN

14 April 1961

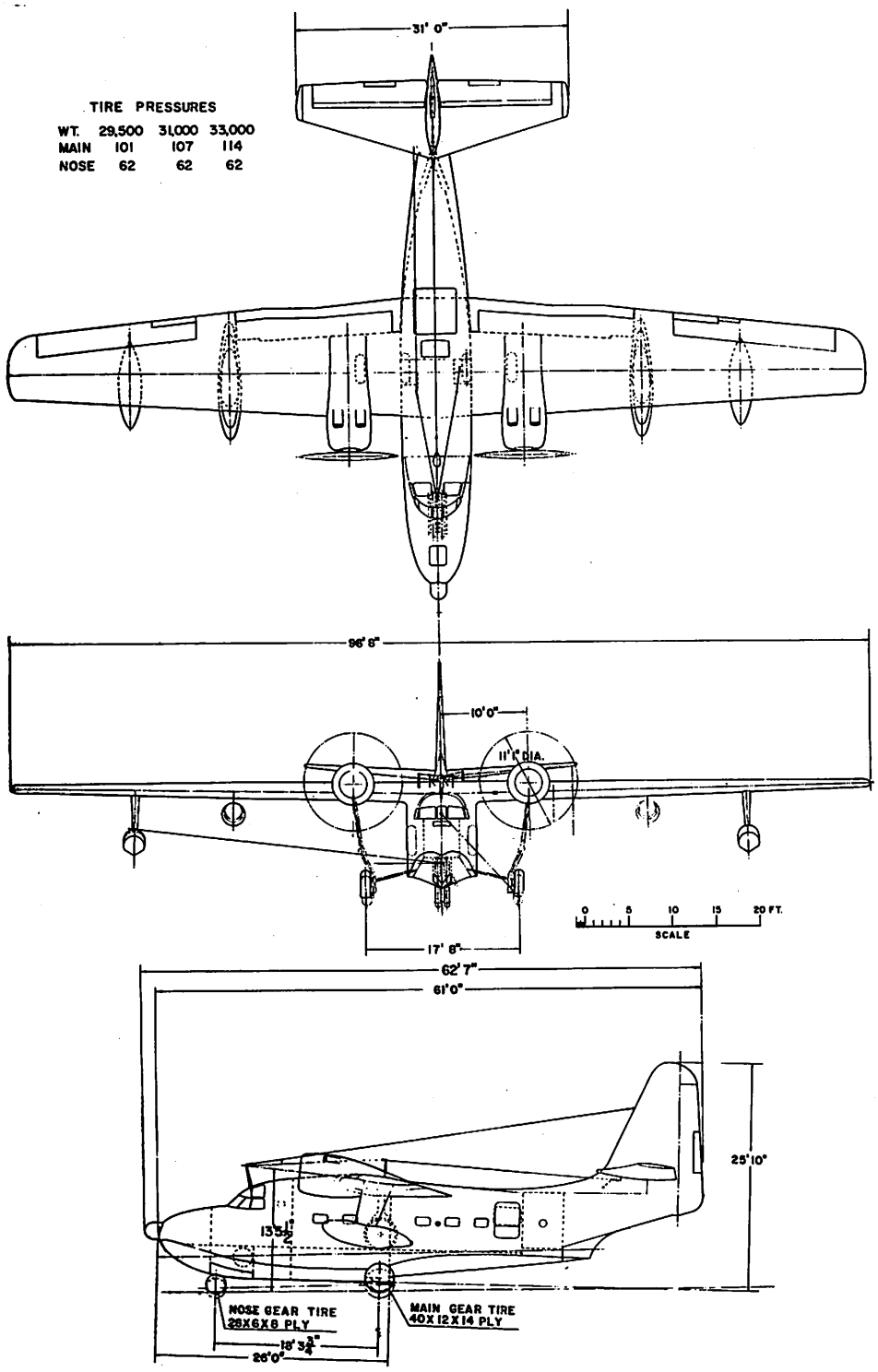
TIRE PRESSURES
WT. 29,500 31,000 33,000
MAIN 101 107 114
NOSE 62 62 62
31' 0"
96' 8"
10' 0"
11' 6" DIA.
17' 8"
0 5 10 15 20 FT.
SCALE
62' 7"
61' 0"
25' 10"
13' 5½"
NOSE GEAR TIRE
28X6X8 PLY
MAIN GEAR TIRE
40X12X14 PLY
18' 3¾"
26' 0"

STANDARD AIRCRAFT CHARACTERISTICS

C-123 B

FAIRCHILD

14 April 1961

Standard Aircraft Characteristics NAVAER 1335A (REV. 1-55)

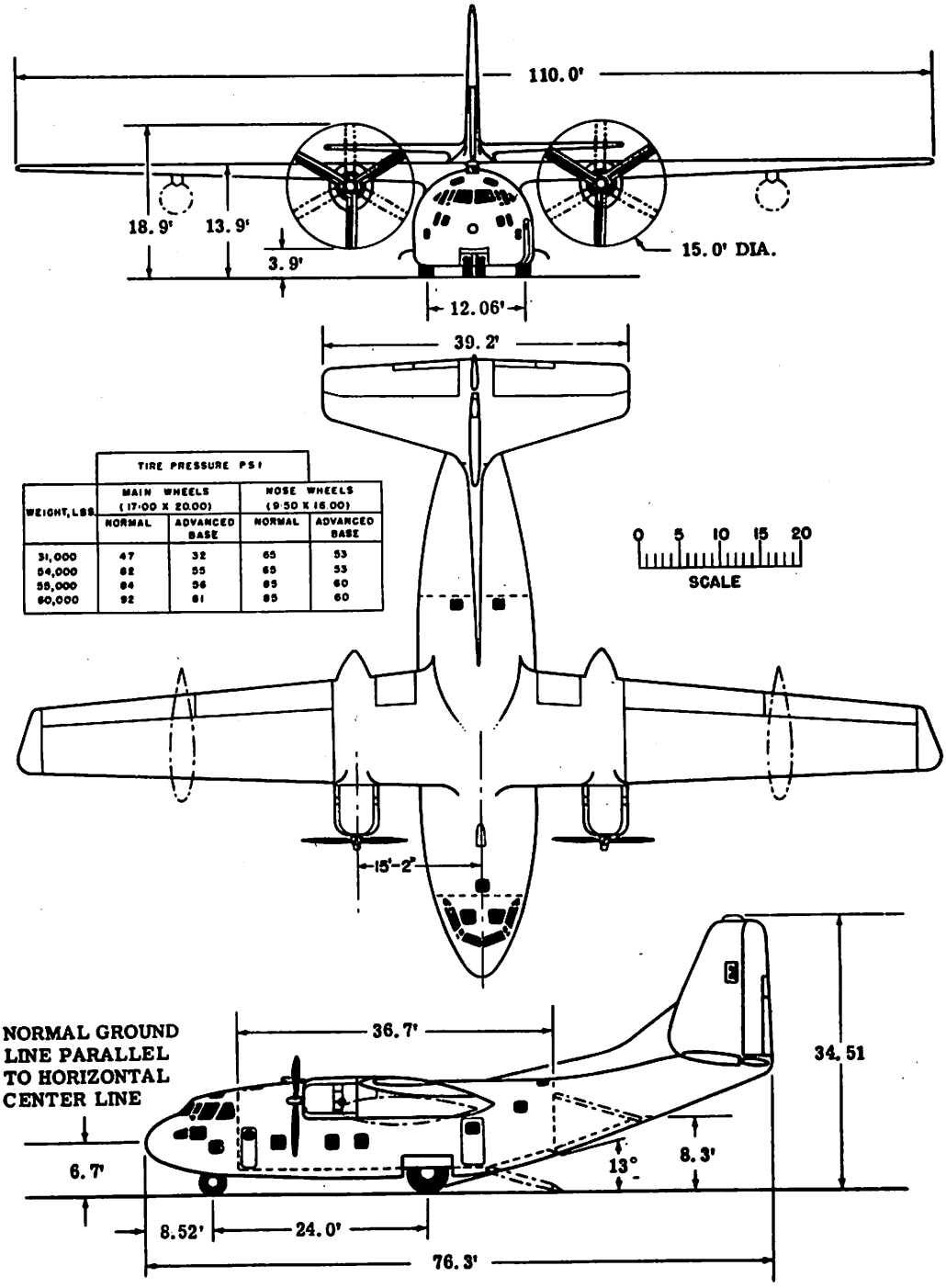

WEIGHT, LBS.	TIRE PRESSURE PSI			
	MAIN WHEELS (17.00 X 20.00)		NOSE WHEELS (9.50 X 16.00)	
	NORMAL	ADVANCED BASE	NORMAL	ADVANCED BASE
31,000	47	32	65	53
54,000	82	55	65	53
55,000	84	56	65	60
60,000	92	61	85	60

USCG DWG. NO. C-123 B SACC-13

POWER PLANT

NO. & MODEL . . . . . (2) R280D-99W
MFR . . . . . P & W
SUPERCHARGER. . . . 1 STAGE, 2 SPEED
RED. GEAR RATIO 0.45:1
PROP MFR . . . . . HAMILTON STANDARD
PROP DES. NO. 6917B-14
NO. BLD/DIA . . . . . 3/15'-0"

RATINGS

		BHP	@ RPM	@ ALT
TAKEOFF	(Dry)	2300	2800	S. L.
	(Wet)	2500	2800	S. L.
MIL.	(Dry)	2300	2800	S. L.
		2300	2800	3500'
NORMAL		1900	2600	7000'
		1700	2600	14,500'

SPEC. A-8146

ACCOMMODATIONS

Crew 4
(Pilot, Co-pilot, Navigator, Engineer)
Troop Seats 60
CARGO DOOR. . . . . 110" x 117"
PARATROOP DOORS . . . . . 36" x 70½"

Floor Loading: . . 200 lbs. /SQ. FT.

Cargo Space . . . . . 2420 CU. FT.

CARGO SPACE . . . . . 444" long, 98" high, 110" wide

DOOR SILLS 33½" ABOVE STATIC GROUND LINE

RAMP WIDTH . . . . . 110"

MISSION AND DESCRIPTION

Built by the Fairchild Aircraft Division, the C-123B medium assault cargo airplane is a twin engine, high wing, land monoplane, of all metal semi-monocoque construction.

It is equipped with a retractable tricycle landing gear incorporating a steerable nose gear.

The nose section which houses the pilot and co-pilot is of steel tube truss construction for maximum crash protection.

Power is supplied by two supercharged radial engines equipped with three-bladed, constant-speed, full feathering, reversible pitch propellers.

The aircraft is primarily a troop and cargo carrier with the capability of operating from hastily prepared fields.

Normal flight crew complement is four (4) men.

DIMENSIONS

WING SPAN. . . . . 110'-0"
WING AREA. . . . . .1223 sq. ft.
LENGTH . . . . . 76'-4"
HEIGHT . . . . . 34'-6"
TREAD . . . . . 12'-1"

WEIGHTS

Loadings	Lbs.
EMPTY	31,520
BASIC	31,640
DESIGN.	54,000
MAX. T. O..	60,000

FUEL AND OIL

Gals.	No. Tanks	Location
1,448	2	Nacelle
882	2	Drop

FUEL GRADE 115/145
FUEL SPEC MIL-F-5572

OIL

CAPACITY . . . . . 80 gals.
GRADE & SPEC 1100/MIL-L-6082

ELECTRONICS

ICS AIC-10
IFF APX-6
IFF CODER APA-89
RADAR ALT APN-22
LORAN APN-70
UHF ARC-27
VHF TRANS 17L4
VHF REC 51X1B
HF TRANSCEIVER. ARC-38
TACAN ARN-21
OMNI. ARN-14
ADF ARN-6
ADF ARN-44
MARKER BEACON ARN-12
GLIDE SLOPE AN/ARN-18
RADAR APS-42B
SURVIVAL TRANSCEIVER (2 ea). AN/URC-4
SURVIVAL TRANSMITTER. AN/CRT-3

14 April 1961

PERFORMANCE SUMMARY

TAKE-OFF LOADING CONDITION		(1) LOGISTIC 2x440 gal drop tanks	(2) LOGISTIC Full Internal Fuel	(3) SAR		
TAKE-OFF WEIGHT	lb.	54,000	54,000	48,320		
Fuel (Fixed/Drop)	lb.	8,688/5,232	8,688	8,688/5,232		
Payload	lb.	6,680	12,412	1,000		
Wing loading	lb./sq.ft.	44.1	44.1	39.5		
Stall speed - power-off	kn.	77.8	77.8	73.7		
Take-off run at S.L. - calm (Wet/Dry)	ft.	1,300/2,160	1,300/1,160	1,000/1,650		
Take-off run at S.L. kn. wind	ft.	--	--	--		
Take-off to clear 50 ft. - calm (Wet/Dry)	ft.	2,160/3,730	2,160/3,730	1,610/2,810		
Max. speed/altitude (B)	kn./ft.	203/16,000	208/16,000	206/16,000		
Rate of climb at S.L. (B)	fpm.	940	920	1,160		
Time: S.L. to 5,000 ft. (B)	min.	6.0	5.5	4.5		
Time: S.L. to 10,000 ft. (B)	min.	12.5	12.5	10.0		
Service ceiling (100 fpm) (B)	ft.	23,600	24,300	26,800		
Combat range	n.mi.	2,230	1,330	2,270		
Average cruising speed	kn.	130	135	123		
Cruising altitude(s)	ft.	5,000	5,000	5,000		
Combat radius	n.mi.					
Average cruising speed	kn.					
COMBAT LOADING CONDITION						
COMBAT WEIGHT	lb.					
Engine power						
Fuel	lb.					
Combat speed/combat altitude	kn./ft.					
Rate of climb/combat altitude	fpm/ft.					
Combat ceiling (500 fpm)	ft.					
Rate of climb at S.L.	fpm.					
Max. speed at S.L.	kn.					
Max. speed/altitude	kn./ft.					
LANDING WEIGHT	lb.	41,070	45,650	36,300		
Fuel	lb.	990	750	906		
Stall speed - power-off	kn.	68.0	71.6	64.0		
Stall speed - with approach power	kn.	62.9	66.1	59.1		

NOTES

A. Performance is based on Flight Handbook, T. O. IC-123B-1 of 15 February 1957.
B. Normal rated power both engines.

1 April 1959

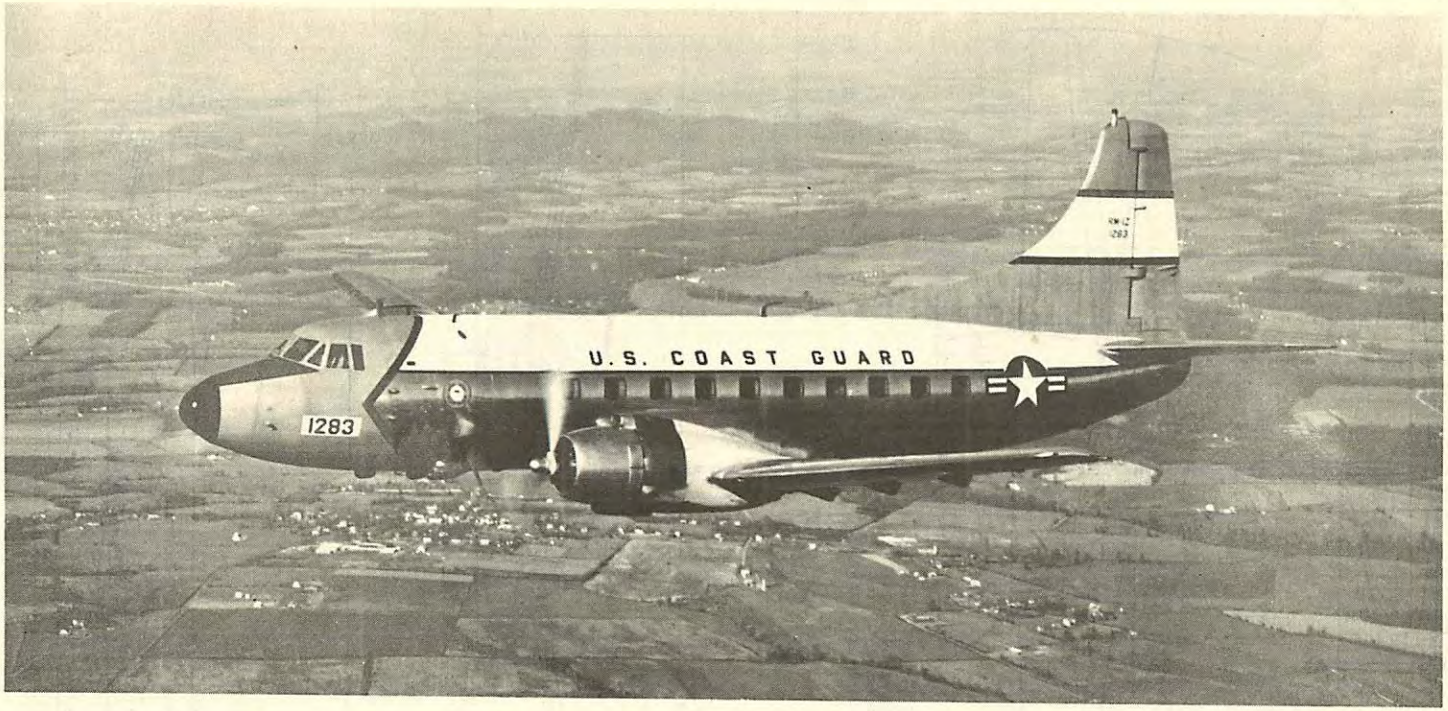

STANDARD AIRCRAFT CHARACTERISTICS

RM-1Z

MARTIN

14 April 1961

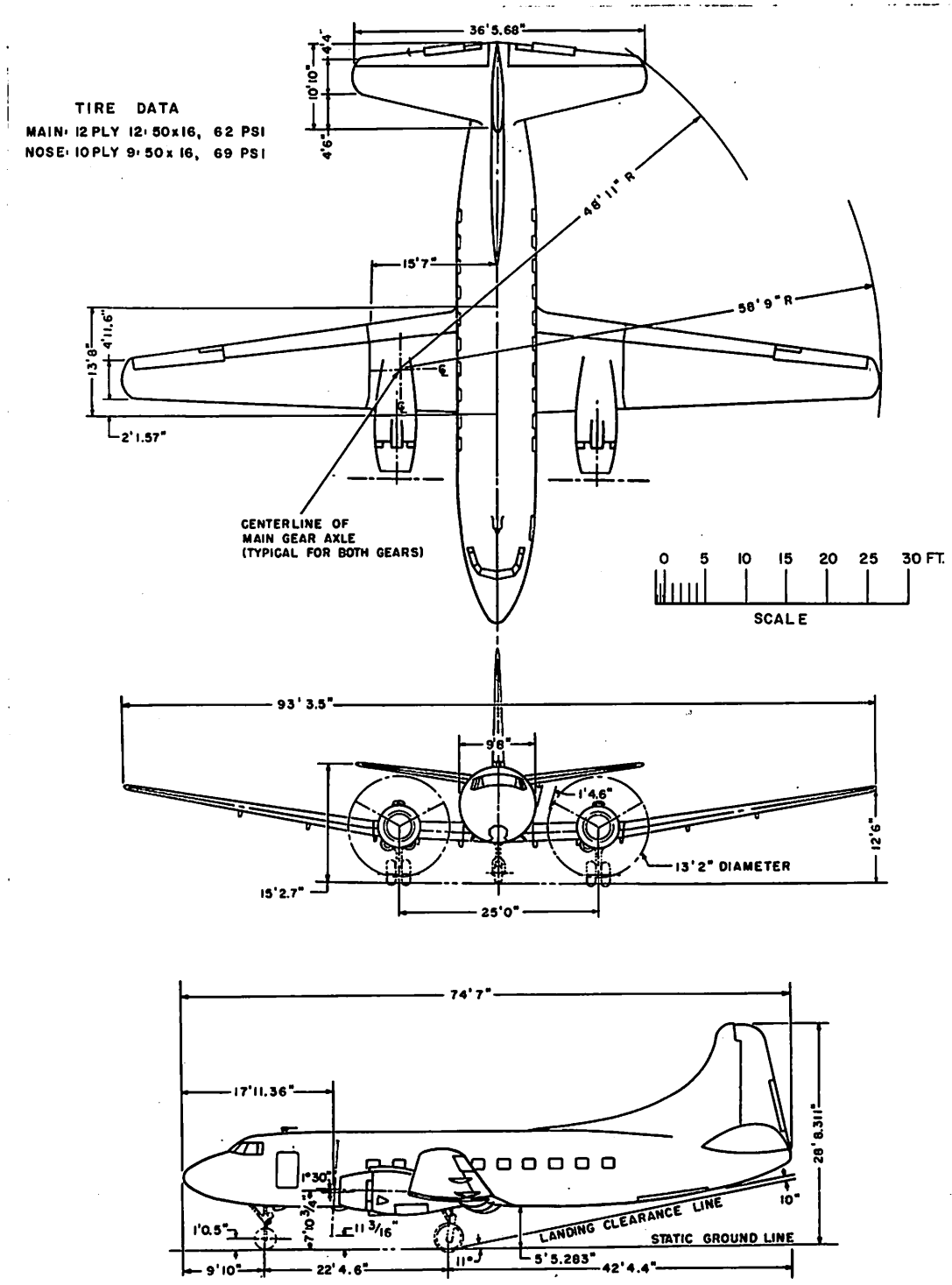
TIRE DATA
MAIN: 12 PLY 12.50x16, 62 PSI
NOSE: 10 PLY 9.50x16, 69 PSI
36'5.68"
4'4"
10'10"
4'6"
46'11" R
15'7"
58'9" R
4'11.6"
13'6"
2'1.57"
CENTERLINE OF
MAIN GEAR AXLE
(TYPICAL FOR BOTH GEARS)
0 5 10 15 20 25 30 FT.
SCALE
93'3.5"
9'6"
1'4.6"
12'6"
13'2" DIAMETER
15'2.7"
25'0"
74'7"
17'11.36"
28'8.311"
1°30"
10"
1'0.5"
7'10 3/4"
11 3/16"
LANDING CLEARANCE LINE
STATIC GROUND LINE
11°
5'5.283"
9'10"
22'4.6"
42'4.4"

POWER PLANT

NO. & MODEL (2). R-2800
NO. & MODEL (2). R2800-52W
MFR. . . . . PRATT & WHITNEY
SUPERCHARGER . . . . . 1 STAGE, 2 SPEED
PROP GEAR RATIO. . . . . 0.450 : 1
PROP MFR . . . . . HAMILTON STANDARD
PROP DES NO. 43E60
NO. BLADES/DIA . . . . . 3/13'-2"

RATINGS

	Bhp	@RPM	@Alt.
TAKEOFF(wet)	2400	2800	S.L.
TAKEOFF(dry)	2100	2800	S.L.
MAX CONT.	1800	2600	7,200
MAX CONT. (High Blower)	1600	2600	16,200

ACCOMMODATIONS

CREW. 5
(Includes pilot, co-pilot, radioman, & 2 mechanics)
PASSENGER SEATS (Normal) 22
BUNK SEATS 6
TOTAL PASSENGER SEATING. 28

CARGO HATCH
Length. . . . . .28"
Width . . . . . .21"

CARGO HOLD
Length . . . . . 15' - 6"
Width . . . . . 4' - 9"
Depth at Ctr. . . . . 22"
Depth at sides . . . . . 14"

MISSION AND DESCRIPTION

The RM-1Z is an all weather, medium range, twin engine transport landplane manufactured by Martin Aircraft Company.

This aircraft is a special service aircraft for the transport of managerial and supervisory personnel on administrative assignments.

Internal arrangement from forward to aft provides for the following compartments: Pilots, radio-galley, crew, and main passenger cabin.

Special features provide for a pressurized cabin, steerable nose wheel, and reverse pitch propellers.

Normal crew complement is five persons.

DIMENSIONS

WING AREA . . . . . 864 sq. ft.
WING SPAN . . . . . 93' - 3.5"
LENGTH . . . . . 74' - 7"
HEIGHT . . . . . 28' - 8.31"
TREAD . . . . . 25'
CABIN BEAM . . . . . 9' - 8"

WEIGHTS

Loadings	Lbs.
BASIC	34,420
MAX T. O. (Water Inj.). . . .	43,650
MAX T. O. (Dry)	41,500
MAX LANDING (Water Inj.). . .	43,000
MAX LANDING (Dry)	41,500

FUEL AND OIL

Gals.	No. Tanks	Location
685 ea.	2	Wing

FUEL GRADE....115/145 (MIL-F-5572)
ALT. GRADE....100/130 (MIL-G-5572B)

OIL

CAPACITY. . . . . 25.5 ea.
GRADE. 1100
SPEC MIL-L-6082B

ELECTRONICS

VHF TRANS 17L4
VHF REC 51X-1B
UHF ARC-27
HF TRANSCEIVER ARC-38
MF/HF RECEIVER ARR-41
RADIO COMPASS (2) ARN-6
VOR (2) ARN-14D
MARKER BEACON ARN-12
LORAN APN-70
ICS AIA-2A
RADAR APS-42B
IFF APX-6B
IFF CODER APA-89
RADAR ALTIMETER AN/APN-22
GLIDE SLOPE (2 ea.) AN/ARN-18
SURVIVAL TRANSCEIVER . . . AN/URC-4

14 April 1961

PERFORMANCE SUMMARY

TAKE-OFF LOADING CONDITION			(1) TRANSPORT				
TAKE-OFF WEIGHT		lb.	43,650				
Fuel		lb.	8,112				
Payload		lb.	1,118				
Wing loading		lb./sq.ft.	50.5				
Stall speed - power-off		kn.	72				
Take-off run at S.L. - calm	(C)	ft.	4,480				
Take-off run at S.L. kn. wind		ft.	- -				
Take-off to clear 50 ft. - calm	(C)	ft.	- -				
Max. speed/altitude	(A)	kn./ft.	261/ to 20,000				
Rate of climb at S.L.	(A)	fpm.	1,320				
Time: S.L. to 10,000 ft.	(A)	min.	8.5				
Time: S.L. to 20,000 ft.	(A)	min.	21.5				
Service ceiling (100 fpm)	(A)	ft.	25,000				
Combat range		n.mi.	1,005				
Average cruising speed		kn.	195				
Cruising altitude(s)		ft.	15,000				
Combat radius		n.mi.					
Average cruising speed		kn.					
COMBAT LOADING CONDITION							
COMBAT WEIGHT		lb.					
Engine power							
Fuel		lb.					
Combat speed/combat altitude		kn./ft.					
Rate of climb/combat altitude		fpm/ft.					
Combat ceiling (500 fpm)		ft.					
Rate of climb at S.L.		fpm.					
Max. speed at S.L.		kn.					
Max. speed/altitude		kn./ft.					
LANDING WEIGHT		lb.	37,462				
Fuel		lb.	885				
Stall speed - power-off		kn.	68				
Stall speed - with approach power		kn.	—				

NOTES

(A) Normal rated power.
(B) Performance based on airplane Flight Manual of 4/1/60.
(C) Takeoff distance to clear 50 ft with engine failure at critical speed (CAR 40).

14 April 1961

RM-1Z

STANDARD AIRCRAFT CHARACTERISTICS

HUS-1G

SIKORSKY

14 April 1961

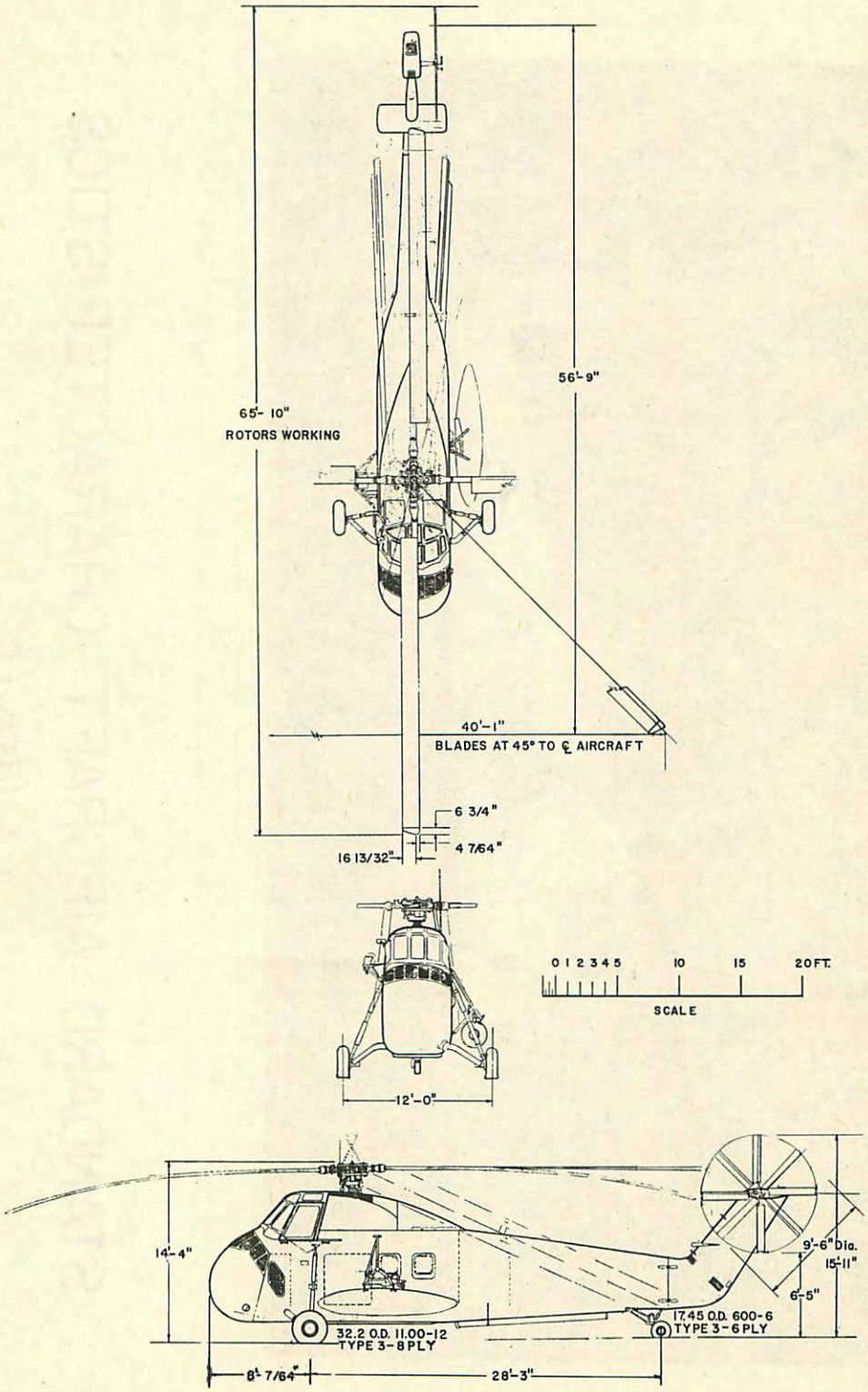
65'- 10"
ROTORS WORKING
56'-9"
40'-1"
BLADES AT 45° TO ℄ AIRCRAFT
6 3/4"
4 7/64"
16 13/32"
0 1 2 3 4 5 10 15 20 FT.
SCALE
12'-0"
14'-4"
9'-6" Dia.
15'-11"
6'-5"
32.2 O.D. 11.00-12
TYPE 3-8 PLY
17.45 O.D. 600-6
TYPE 3-6 PLY
8'-7/64"
28'-3"

POWER PLANT

NO. & MODEL (1). R-1820-84
MFR . . . . . WRIGHT
SUPERCHARGER . . . . 1 STAGE, 1 SPEED
ROTOR GEAR RATIO . . . . . 11.3 to 1
TAIL ROTOR RATIO . . . . . 1.9 to 1

RATINGS

	BHP	@ Rpm	@ Alt.
TAKEOFF	1,525	2,800	700
MILITARY	1,425	2,700	2,400
NORMAL	1,275	2,500	3,500

ACCOMMODATIONS

Crew 4
(Pilot, Co-Pilot, 2 Observers)

Passenger Seats 10*
*(Includes Observers seats)

Cabin Door:
Height . . . . . 48"
Width . . . . . 52"

Cabin Floor Loading. . . .200 lbs./ft^2

MISSION AND DESCRIPTION

The HUS-1G helicopter is a medium range utility helicopter whose primary mission in the Coast Guard is search and rescue. Secondary missions for which it is suited include: transport of personnel and cargo, reconnaisance, and general utility.

This single engine helicopter is manufactured by Sikorsky Aircraft Company. It has a single four-bladed main rotor with a single four bladed anti-torque rotor. The main rotor blades and the tail rotor pylon are foldable to facilitate storage. Alighting gear is conventional.

Internal arrangement of the helicopter features side-by-side seating of the pilot and co-pilot with dual instrumentation and controls provided. The main cabin is located directly beneath the main rotor with the pilots compartment above and forward of the cabin. The engine is located in the nose with access being provided by clamshell doors.

Design features include: a six hundred (600#) pound rescue hoist, automatic stabilization system, towing equipment, provisions for night and instrument flying, range extension (droppable tank), and dual servo control systems. Cargo may be carried in the cabin or by means of an external sling underneath the fuselage.

Normal crew complement is four persons.

DIMENSIONS

DISC AREA. . . . . .2,410 sq. ft.
BLADE AREA (total) . . . 140 sq. ft.
ROTOR DIA. . . . . 56' 0"
OVERALL LENGTH. . . . . 65'10"
FUSELAGE LENGTH . . . . . 37' 0"
HEIGHT TO TOP OF TAIL ROTOR. 15' 11"
TREAD. . . . . 12' 0"

WEIGHTS

Loadings	Lbs.
EMPTY	8,331
BASIC	8,529
DESIGN.	11,400
MAX.T.O..	13,300
MAX LAND.	13,300

FUEL AND OIL

Gals. -	No. Tanks -	Location
276	3	Fuselage
150	1	Drop

FUEL GRADE. 115/145
FUEL SPEC.. . . . . MIL-G-5572B

OIL

CAPACITY (Gals.). 12.8
GRADE . . . . . 1100 & 1065
SPEC MIL-L-6082B

ELECTRONICS

ICS AIC-14
IFF APX-6
IFF CODER APA-89
RADAR ALTIMETER APN-117
UHF ARC-55
UHF/VHF HOMER AN/ARA-25
HF TRANSC ARC-38
OMNI ARN-14
MARKER BEACON ARN-12
TACAN ARN-21
VHF TRANS 17L4
VHF REC 51X1B
ADF ARN-41C
GLIDE SLOPE AN/ARN-18
SURVIVAL TRANSCEIVER AN/URC-4

14 April 1961

PERFORMANCE SUMMARY

TAKE-OFF LOADING CONDITION		(1) SAR Maximum fuel	(2) SAR Internal fuel	(3) LOGISTIC		
TAKE-OFF WEIGHT	lb.	12,590	11,525	13,300		
Fuel Fixed/Drop (6 lbs/gal)	lb.	1668/900	1668/--	1668/--		
Payload or SAR gear	lb.	200	200	1,975		
Disc loading	lb./sq.ft.	5.2	4.8	5.5		
Vertical rate of climb at S.L. (A)/(B)	fpm.	50/690	500/1,200	--/350		
Absolute hovering ceiling (A)/(B)	ft.	2,000/4,200	5,100/6,500	--/2,700		
Max. rate of climb at S.L. (A)	fpm.	1,280	1,560	1,120		
Service ceiling (100 fpm) (A)	ft.	11,500	13,350	10,280		
Speed at S.L. (A)	kn.	125	130	121		
Max. speed/altitude (A)	kn./ft.	125/S. L.	130/S. L.	121/S. L.		
Range (C)	n.mi.	550	360	285		
Average cruising speed (C)	kn.	88	91	83		
Cruising altitude	ft.	1,500	1,500	1,500		
Hover or tow endurance (A)	hrs.	2.7	2.1	1.5		
Search time at 200 n.mi. radius (C)	hrs.	1.7	---	---		

NOTES

(A) Normal power (NRP) standard air (dry). For decreased performance due to warm days or moist days, consult the Flight Handbook.

(B) Take-off power, standard air (dry). Note that use of T.O. power for over 5 minutes at one time is forbidden, to prevent engine damage.

(C) Range is taken at speeds for maximum miles per gallon. Reserve is 10% of starting fuel.

(D) Performance is based on the Flight Handbook, AN01-230HLA-1. Ground effect is not considered in any configuration.

1 April 1959

POWER PLANT

NO. & MODEL. . . . . .(1) VO-435-AID
MFR. . . . . .LYCOMING
ROTOR GEAR RATIO . . . . . 9 to 1

RATINGS

	Bhp	@ Rpm	@ Alt
TAKEOFF	240	3200	
NORMAL	220	3200	SL to 4,500

ACCOMMODATIONS

Crew 2
(Pilot and Observer)

Passenger seats 3*

* Includes observers' seat.

MISSION AND DESCRIPTION

The HUL-1G is a short range light weight utility helicopter whose primary mission is search and rescue. Secondary missions for which it is suitable include: limited logistic support, reconnaisance, and general utility.

The HUL-1G is a four place single engine helicopter manufactured by Bell Aircraft Company. It is equipped with a two-bladed main rotor and a two-bladed anti torque rotor. Alighting gear consists of skids on each side of the fuselage.

Internal arrangement of the helicopter provides for cabin forward seating one pilot and three passengers. The front of the cabin features a large transparent plastic bubble. The engine is located directly to the rear of the cabin with a vertical drive to the main rotor.

Design features include a four hundred pound (400#) hydraulic hoist for rescue, and instrumentation for night and limited instrument flying.

This helicopter may be operated from either a land or shipboard base.

Normal crew complement for a SAR mission consists of two persons.

DIMENSIONS

DISC AREA . . . . . 1085 sq. ft.
BLADE AREA (total). . . 35.3 sq. ft.
ROTOR DIA . . . . . 37'-2"
OVERALL LENGTH . . . . . 43'-5"
FUSELAGE LENGTH . . . . . 32'-5"
HEIGHT (max.). . . . . 12'-0"
TREAD . . . . . 7'-6"

WEIGHTS

Loadings	lbs.
EMPTY	1690
BASIC	1702
DESIGN	2800
NORMAL	2486
MAXIMUM	2800

FUEL AND OIL

Gals.	No. Tanks	Location
35	2	Above engine

FUEL GRADE 80/87
FUEL SPEC. MIL-G-5572B

OIL

CAPACITY (Gals.). 1½
GRADE 1100
SPEC. MIL-L-6082B

ELECTRONICS

ICS. . . . . AIC - 4
*HF TRANS ARC-39
*VHF ARC-84
ADF ARN-41C

* Configuration can accomodate either ARC-39 or ARC-84 but not both.

14 April 1961

PERFORMANCE SUMMARY

TAKE-OFF LOADING CONDITION			(1) PORT SECURITY	(2) SAR			
TAKE-OFF WEIGHT		lb.	2,122	2,322			
Fuel		lb.	210	210			
Payload		lb.	- -	- -			
Disc loading		lb./sq.ft.	2.0	2.1			
Vertical rate of climb at S.L.	(A)	fpm.	1,165	850			
Absolute hovering ceiling	(A)	ft.	8,300	6,300			
Max. rate of climb at S.L.	(A)	fpm.	1,180	1,005			
Service ceiling (100 fpm)	(A)	ft.	18,200	15,900			
Speed at S.L.	(A)	kn.	98	96			
Max. speed/altitude	(A)	kn./ft.	104/4,000	100/4,000			
Range		n.mi.	113	109			
Average cruising speed		kn.	78	77			
Cruising altitude		ft.	S. L.	S. L.			
Combat radius		n.mi.					
Average cruising speed		kn.					

NOTES

(A) Normal power, standard air (dry). For decreased performance due to warm days and moist days, consult the Flight Handbook.

(B) Performance is based on Flight Handbook, NavAer 01-110 HBA-501.

17 July 1958

GPO 916196