U.S. Department of
Homeland Security

**United States
Coast Guard**

Diving Operations: Aids to Navigation (ATON) Tactics, Techniques, and Procedures (TTP)

**Force Readiness Command
(FORCECOM)**

**CGTTP 3-17.6
September 2016**

This page intentionally left blank.

U.S. Department of Homeland Security
United States Coast Guard

Commander
United States Coast Guard
Force Readiness Command

300 E. Main Street, Suite 1100
Norfolk, VA 23510
Staff Symbol: FC-P
Phone: (757) 628-4463

CGTTP 3-17.6
30 SEPT 2016

COAST GUARD TACTICS, TECHNIQUES, AND PROCEDURES 3-17.6

Subj: DIVING OPERATIONS: AIDS TO NAVIGATION (ATON)

Ref:
(a) Coast Guard Diving Policies and Procedures Manual, Volume I, COMDTINST M3150.1 (series)
(b) U.S. Navy Diving Manual, SS521-AG-PRO-010 (series)
(c) Aids to Navigation Manual Seamanship, COMDTINST M16500.21 (series)
(d) Boat Crew Seamanship Manual, COMDTINST 16114.5 (series)
(e) Aids to Navigation Manual Administration, COMDTINST M16500.7 (series)
(f) Aids to Navigation Manual Technical, COMDTINST M16500.3 (series)

1. PURPOSE. To provide divers with tactics, techniques, and procedures (CGTTP) to conduct planning, procedures, and evolutions for a variety of USCG ATON diving missions.

2. ACTION. This CGTTP publication applies to personnel who are training for or have achieved Diver rating or Diving Chief Warrant Officer specialty. Internet release is authorized.

3. DIRECTIVES/TTP AFFECTED. None.

4. DISCUSSION. This tactics, techniques, and procedures (TTP) publication is intended to guide field operators, operational commanders, and training system instructors employing Coast Guard divers in the conduct of ATON-related diving operations. ATON is the first of a planned series of TTP publications envisioned using the general title of Diving Operations. Other potential TTP publications in this series include ports, waterways, and coastal security (PWCS); underwater ship husbandry (UWSH); law enforcement; ice and cold water diving; contaminated water; salvage; and waterfront facilities.

   This TTP publication was authored and validated by subject matter experts and accomplished performers in the field. The TTP publication will adhere to a lifecycle maintenance periodicity of four years from date of promulgation unless triggered by other interim revision requirements.

5. DISTRIBUTION. FORCECOM TTP Division posts an electronic version of this TTP publication to the CGTTP Library on CGPortal. In CGPortal, navigate to the CGTTP Library by selecting **References > TACTICS, TECHNIQUES, AND PROCEDURES LIBRARY**. FORCECOM TTP Division does not provide paper distribution of this publication.

6. REQUEST FOR CHANGES. Submit recommendations for TTP improvements or corrections through the TTP Request form on CGPortal. In CGPortal, navigate to the TTP Request form by selecting References > FORCECOM - TTP Requests.

BELBEN.LANCE.C.1186791750

Digitally signed by BELBEN.LANCE.C.1186791750
DN: c=US, o=U.S. Government, ou=DoD, ou=PKI, ou=USCG, cn=BELBEN.LANCE.C.1186791750
Date: 2016.09.30 14:07:49 -04'00'

L.C. BELBEN
Captain, U. S. Coast Guard
Chief, FORCECOM TTP Division (FC-P)
By Direction of Commander,
Force Readiness Command

Table of Contents

Table of Figures ii

Chapter 1: Introduction 1-1

Section A: Introduction 1-2

Section B: Notes, Cautions, and Warnings 1-3

Chapter 2: ATON Mission Planning 2-1

Section A: Safety 2-2

Section B: Equipment 2-4

Chapter 3: ATON Diving Procedures 3-1

Section A: Short Stay 3-2

Section B: Sinker Management 3-6

Section C: Lifting Operations 3-9

Section D: Chain Bundling 3-13

Section E: Top Disconnect/Reconnect 3-18

Section F: Bottom Disconnect/Reconnect 3-20

Section G: Setting the Aid 3-23

Section H: Towing Operations 3-24

Chapter 4: Standard ATON Diving Evolutions 4-1

Section A: Mooring Inspection 4-2

Section B: Mooring Replacement 4-3

Section C: Aid Relief 4-6

Section D: Repositioning 4-8

Section E: Sunken Aid Recovery 4-9

Appendix A: Glossary and Acronyms A-1

Table of Figures

Figure 2-1 Mooring configuration 2-4

Figure 2-2 DOR-MOR anchor example 2-5

Figure 2-3 Fill whip 2-6

Figure 2-4 Divers using split key spreaders 2-7

Figure 2-5 Split key spreader dimensions 2-7

Figure 3-1 Initial descent 3-2

Figure 3-2 Ascent 3-3

Figure 3-3 Inverted sinker 3-4

Figure 3-4 Maneuvering to short stay 3-5

Figure 3-5 Using a marker float when chain is disconnected 3-6

Figure 3-6 Aid with buried chain 3-7

Figure 3-7 Using a lift bag to free chain 3-8

Figure 3-8 Open (parachute-type) lift bags 3-9

Figure 3-9 Enclosed (pillow-type) lift bags 3-10

Figure 3-10 Swimming down the lift bag 3-11

Figure 3-11 Verifying all divers clear before inflating the lift bag 3-12

Figure 3-12 Chain weight specifications 3-14

Figure 3-13 Chain bundle faked out on deck 3-15

Figure 3-14 Using a lift bag to take a pick 3-16

Figure 3-15 Securing the chain bundle 3-17

Figure 3-16 Using lift bags to remove strain from shackle 3-18

Figure 3-17 Using a fairlead to assist with top reconnect 3-19

Figure 3-18 Divers performing a bottom disconnect 3-20

Figure 3-19 Shackling end of chain to short stay line 3-21

Figure 3-20 Deploying chain directly to the sinker 3-22

Figure 4-1 Vernier caliper 4-2

Figure 4-2 Using strain relief for chafe measurement 4-2

Figure 4-3 Divers performing a top disconnect 4-3

Figure 4-4 Attaching chain to a sunken hull for tender recovery 4-10

This page intentionally left blank.

Chapter 1: Introduction

Introduction

This chapter provides an overview of the contents of this tactics, techniques, and procedures (TTP) publication. It also defines the use of notes, cautions, and warnings in TTP publications.

In This Chapter

This chapter contains the following sections:

Section	Title	Page
A	Introduction	1-2
B	Notes, Cautions, and Warnings	1-3

Section A: Introduction

A.1. Introduction

This TTP publication provides guidance to conduct planning, procedures, and evolutions for a variety of United States Coast Guard (USCG) aids to navigation (ATON) diving missions. It is intended for rated Divers (DV).

This TTP publication cannot cover every diving operations scenario that might arise. Such cases could result in the need to deviate from guidance in this TTP publication. Deviate from this TTP publication as necessary to complete the task with greater safety, effectiveness, or efficiency. Do not take such deviations lightly. Temper any decision to deviate with maturity and a complete understanding of the mission, members' capabilities, and equipment. Whenever possible, consult your unit chain of command prior to deviation. Report TTP publication adjustment needs per the Request for Changes paragraph in the letter of promulgation.

A.2. Diving Operations Policies

Conduct all USCG diving operations per applicable policies, including:

- Reference (a), Coast Guard Diving Policies and Procedures Manual Volume I, COMDTINST M3150.1 (series).
- Reference (b), U.S. Navy Diving Manual, SS521-AG-PRO-010 (series).

A.3. Use of Best Practice

Throughout this TTP publication, the term "best practice" is defined as an innovative or modified practice that results in an improved or more effective response.

A.4. Registered Trademark Disclaimer

The use of registered trademarks in this TTP publication is not an endorsement of these products or companies by the USCG, the Department of Homeland Security, or the Federal government.

Section B: Notes, Cautions, and Warnings

B.1. Overview The following definitions apply to notes, cautions, and warnings found in TTP publications.

NOTE:	**An emphasized statement, procedure, or technique.**
CAUTION:	**A procedure, technique, or action that, if not followed, carries the risk of equipment damage.**
WARNING:	***A procedure, technique, or action that, if not followed, carries the risk of personnel injury or death.***

This page intentionally left blank.

Chapter 2:
ATON Mission Planning

Introduction This chapter discusses considerations for ATON mission planning.

In This Chapter This chapter contains the following sections:

Section	Title	Page
A	Safety	2-2
B	Equipment	2-4

Section A: Safety

A.1. Introduction

This section addresses the specific safety concerns of ATON diving operations. For information regarding the principles of safe diving, see reference (a), Coast Guard Diving Policies and Procedures Manual, Volume 1, COMDTINST M3150.1 (series). For information regarding standard safety precautions relevant to all topside ATON operations, see reference (c), Aids to Navigation Manual Seamanship, COMDTINST M16500.21 (series).

NOTE: **Divers do not normally use tending lines during ATON diving operations due to the risk of becoming entangled in the mooring chain.**

A.2. Lifting Operations

Avoid operating beneath a suspended load or above a load being raised, and exercise care around any load in motion. Avoid becoming entangled with a load and all associated chain and equipment.

WARNING: ***Avoid operating beneath a suspended load. A suspended load can break free and trap or injure divers.***

A.2.a. Rapid Ascent

It is difficult to control the speed of ascent when using a lift bag. Select a lift bag of sufficient size to ensure a safe, controlled ascent. When using a lift bag with a larger than necessary capacity, there is a potential for the load to rapidly ascend as air inside the lift bag expands.

The increased buoyancy required to break suction of a load, such as when “mudded in,” can cause the load to break free unexpectedly and experience an uncontrolled rapid ascent. The air source can ascend with the load if the lift bag’s fill whip does not disconnect.

A.2.b. Rapid Descent

If a load is deployed by venting the lift bag, the increased pressure will cause the lift bag to compress and accelerate as it descends. Do not become entangled with the descending load.

A.3. Chain Handling

Handling chain in the water presents dangers from both wave action and marine growth on the chain.

WARNING: ***Wave action can cause the chain to "jump" unexpectedly when the buoy hull rapidly rises and falls on the surface. When working on surging chain, keep fingers out of the chain links to prevent crushing injuries.***

WARNING: ***When handling chain, the presence of barnacles and other marine growth present a significant abrasion or laceration hazard. Use appropriate personnel protective equipment to prevent injury.***

A.4. Towing Operations

Although lift bags are extremely rugged and reliable, failure of the lift bag is the primary concern with towing a suspended load. Ensure the tow watch continually observes the buoyancy of the lift bag.

WARNING: ***Failure of the lift bag when towing a suspended load can result in parting the tow line, injury to personnel, damage to equipment, or sinking the boat. The boat crew must remain ready to cast off or cut the tow line per reference (d), Boat Crew Seamanship Manual, COMDTINST 16114.5 (series).***

Section B: Equipment

B.1. Introduction

ATON diving requires a combination of tools used on the buoy deck as well as special tools for underwater work.

B.2. Use the Federal Aid Information Document

Obtain the Federal Aid Information Document (FID) for a particular aid from the supported ATON unit and consult it when planning a dive. The FID includes information such as type of aid, environmental factors, servicing history, chain size, sinker size, and chain wear rate. For guidance regarding the FID, see reference (e), Aids to Navigation Manual Administration, COMDTINST M16500.7 (series).

B.3. Buoy

The buoy comprises the floating hull and its appendages.

B.4. Mooring

The mooring includes the chain, bridle, swivel, shackles, and the sinker.

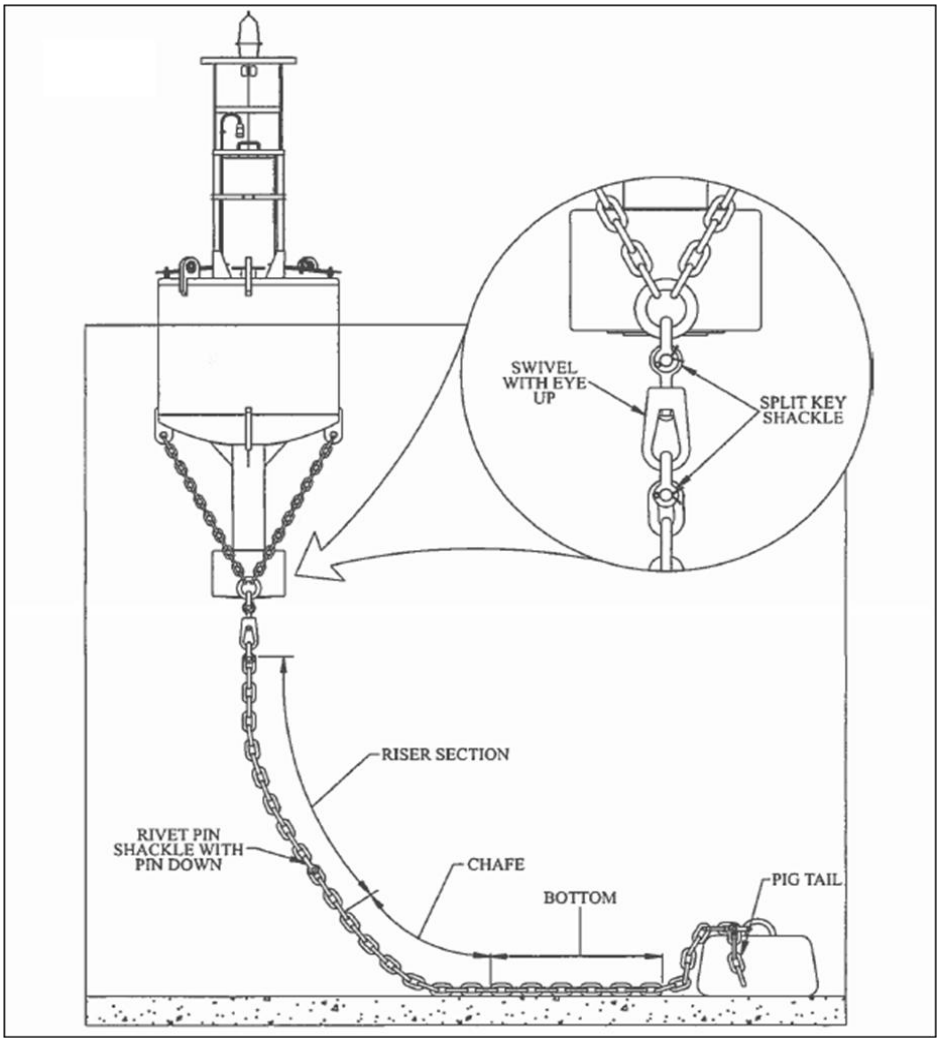

Figure 2-1 Mooring configuration

B.5. Chain

The chain is defined as the length of chain from the buoy or chain bridle down to and including the pig tail.

B.5.a. Chafe

The chafe is the section of a buoy mooring chain between the riser and bottom sections. It is in constant movement and thus typically experiences the most wear.

B.5.b. Riser

The riser is the section of chain between the chafe and the buoy or bridle.

B.6. Sinkers

Sinkers serve to keep a floating aid at an assigned position (AP).

B.6.a. Concrete Sinker

A concrete sinker consists of the concrete weight and the bail.

B.6.b. Pyramid Mooring Anchor

A DOR-MOR® pyramid mooring anchor is a cast-iron sinker, available in sizes ranging from 15 to 4,000 pounds. These anchors are designed for use in areas with mud or sand bottoms and in areas where they can rapidly penetrate the bottom. For more information, see the DOR-MOR website.

Figure 2-2 DOR-MOR anchor example

B.7. Air Source

Use an air source to fill the lift bags. See Section C: Lifting Operations.

CAUTION: **When filling lift bags, it is possible to experience water intrusion into the air cylinder if it is emptied. If water intrusion is suspected, follow applicable preventive maintenance system procedures.**

B.8. Fill Whip

A standard fill whip consists of a low-pressure air hose attached to a first-stage regulator authorized for military use and maintained per applicable preventive maintenance system requirements.

Figure 2-3 Fill whip

When used with an open construction lift bag, a clamp might be necessary to hold the fill whip hose in position while inflating the lift bag. A closed construction lift bag might require a special fitting, for example a pneumatic quick-disconnect.

Best practice recommends using a minimum hose length of 15 feet to ensure divers can inflate the lift bag from a safe stand-off distance. Consider installing a check valve after the first-stage regulator to prevent water intrusion.

B.9. ATON Diving Tool Bag Contents

The ATON diving tool bag can be modified with open grommets to allow water to drain. Tool bag contents include:

- 5-inch C-clamp.
- Split key hammer.
- Extra split keys and pins.
- Locking pliers (Vise-Grips™).
- Split key punch.
- Split key spreaders.
- Various size screw-pin shackles.
- Vernier caliper (English units, 1/32-inch graduations).

B.10. Split Key Spreader

The split key spreaders consist of two bars with slots welded on to one end. Insert the ends of the split key into the slots on the spreaders and pull the bars apart to bend the split key to a 30- to 45-degree angle.

Figure 2-4 Divers using split key spreaders

B.10.a. Split Key Spreader Dimensions

Split key spreaders are not commercially available and are fabricated out of corrosion-resistant metal. The following figure provides dimensions for fabricating split key spreaders.

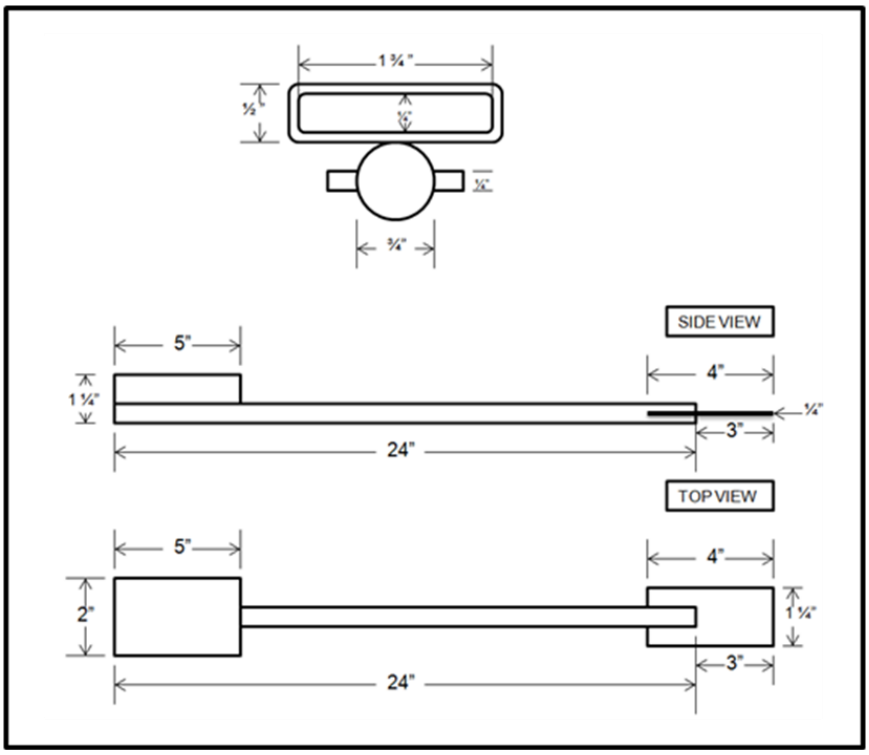

Figure 2-5 Split key spreader dimensions

B.11. Marker Floats	Use marker floats to mark the location of the sinker during mooring relief or other evolutions to relocate the sinker.
B.12. Line	ATON diving operations require various types and lengths of line. The size and type of line depends on its application.
B.12.a. Short Stay Line	Use a short stay line to tie into the sinker bail for position checks. Use a line strong enough to serve as a mooring line and chain guide.
B.12.b. Tow Lines	Use tow lines as necessary to tow ATON components to or from the AP.
B.12.c. Tag Lines	Use various lengths and strengths of taglines as necessary for fairleading chain and managing towed buoys alongside the boat.
B.12.d. Rotten Stop	Rotten stop is a small line, usually 1/4-inch fiber line (six-thread) used to lash bights of mooring chain. Consider breaking strength and resistance to chafing when selecting line to use as rotten stop.

Chapter 3:
ATON Diving Procedures

Introduction This chapter describes various ATON diving procedures.

In This Chapter This chapter contains the following sections:

Section	Title	Page
A	Short Stay	3-2
B	Sinker Management	3-6
C	Lifting Operations	3-9
D	Chain Bundling	3-13
E	Top Disconnect/Reconnect	3-18
F	Bottom Disconnect/Reconnect	3-20
G	Setting the Aid	3-23
H	Towing Operations	3-24

Section A: Short Stay

A.1. Introduction

Most ATON diving evolutions require a position check where the aid is found. Perform short stay to allow an accurate check of the position.

A.2. Approach

While approaching the aid to be serviced, the coxswain and the diving supervisor evaluate conditions to determine whether it is safe to conduct diving operations or postpone. If conditions permit, tie off the boat to the buoy.

A.3. Initial Descent

During initial descent, swim a short stay line down the chain to the sinker. In low visibility, maintain physical or visual contact with the chain to locate the sinker.

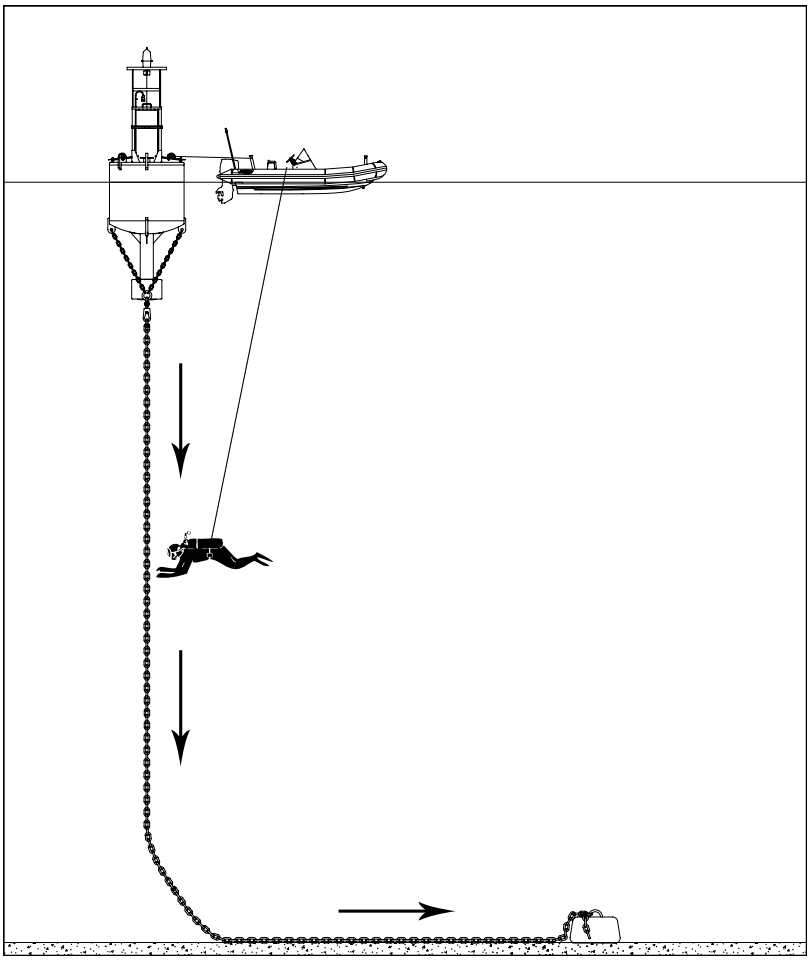

Figure 3-1 Initial descent

A.4. Securing the Short Stay Line

The preferred method of securing the short stay line to the sinker is the rigging-for-slip method. Divers swim the short stay line down to the sinker, pass the line through the sinker bail, and return the line back to the boat. If conditions do not allow rigging-for-slip, attach the short stay directly to the sinker bail.

Running the short stay line back to the surface allows the boat crew to cast the line off from the sinker without having to deploy divers.

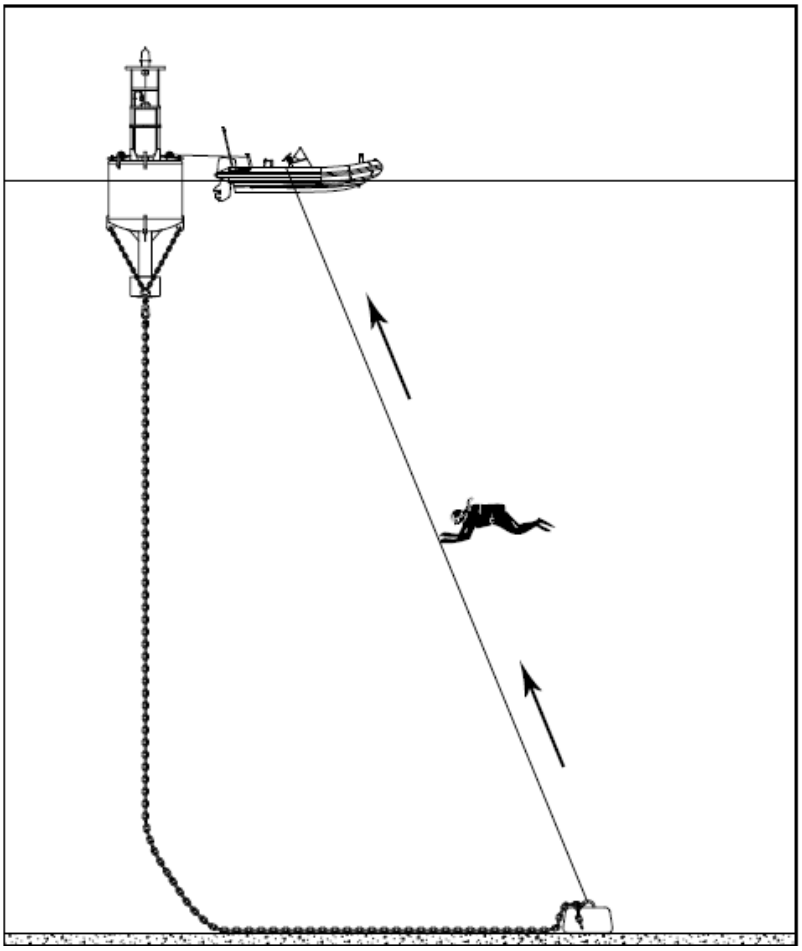

Figure 3-2 Ascent

A.5. Inverted Sinker

In the case of an inverted sinker where the bail is inaccessible beneath the sinker, attach the line to an available chain link nearest to the sinker. If the sinker is inverted and the chain is buried, the divers can lift the chain with a lift bag applied at the point where the chain enters the bottom.

Figure 3-3 Inverted sinker

A.6. Maneuvering to Short Stay

The boat is considered at short stay when no more line can be taken in and the line pulls back sharply as the bow rises with the seas. The boat crew marks the found position and slacks the short stay line again.

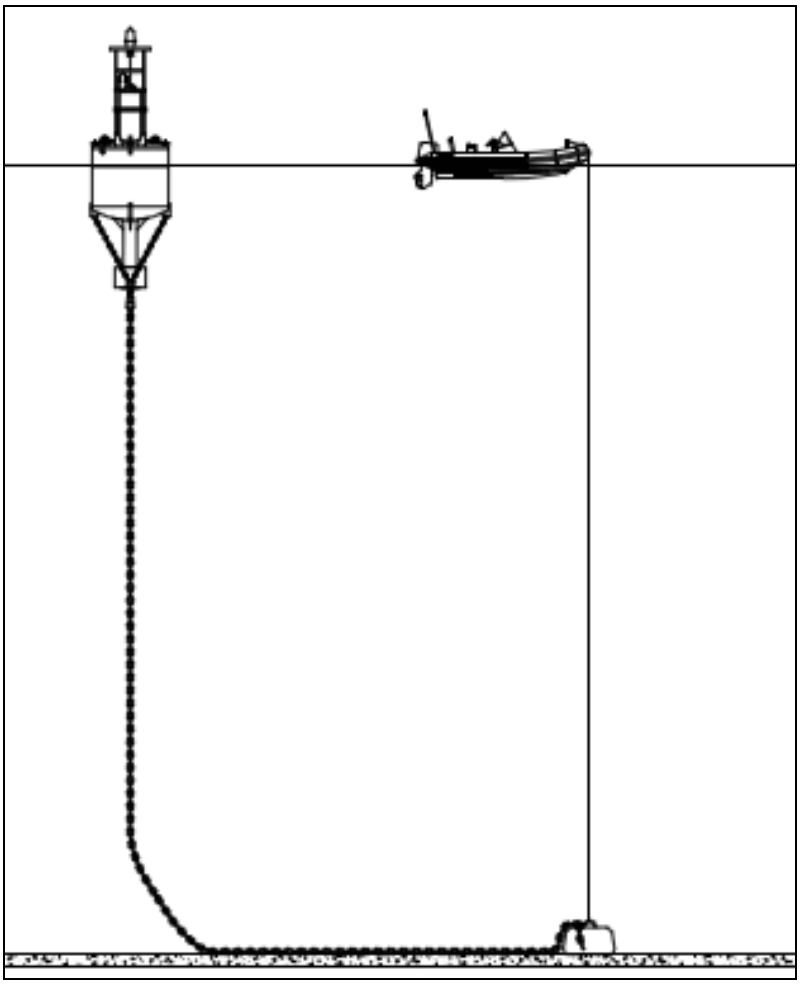

Figure 3-4 Maneuvering to short stay

Section B: Sinker Management

B.1. Introduction

Marking a sinker is necessary when the buoy chain is disconnected and the boat needs to cast off. The ability to locate the sinker quickly and consistently is important for efficient ATON diving operations. Use a marker float, such as a mooring fender, attached to the short stay line to mark the sinker's location.

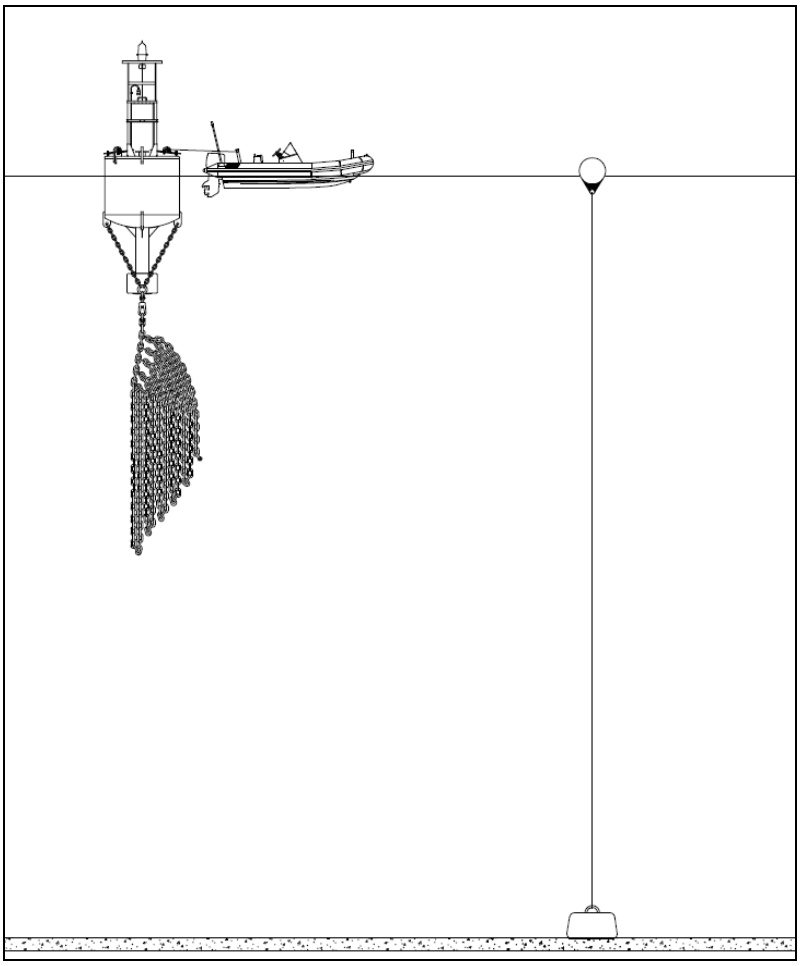

Figure 3-5 Using a marker float when chain is disconnected

B.2. Tidal Considerations

Consider the state and range of the tide when leaving a marker float attached to the sinker. If the tide is expected to rise, leave sufficient slack in the line to prevent the marker float from becoming submerged. One method to reduce excess line in the water as a navigation hazard is to attach a screw-pin shackle to the bottom of the marker float. Then pass the line through the shackle, and affix a counterweight to the bitter end to take up slack as the tide changes.

B.3. Buried Chain

If the chain is buried and the sinker cannot be located, attach a lift bag near the point where the chain enters the seabed and raise it to find the sinker.

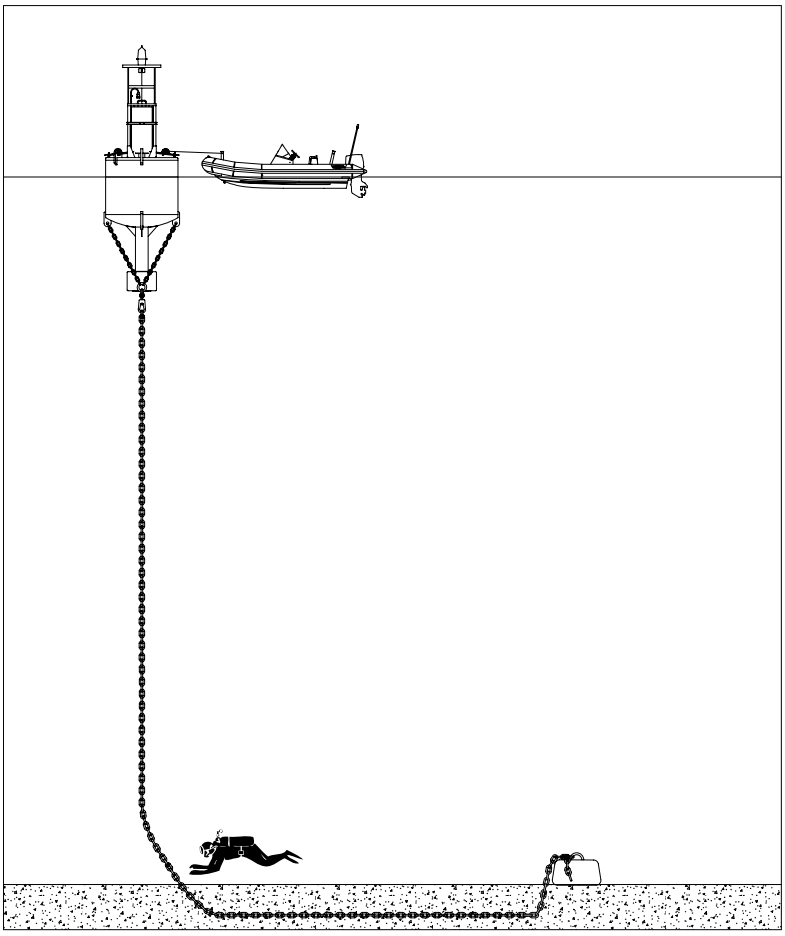

Figure 3-6 Aid with buried chain

B.3.a. Using a Lift Bag to Free Chain

Once the chain is raised, follow the chain to the sinker.

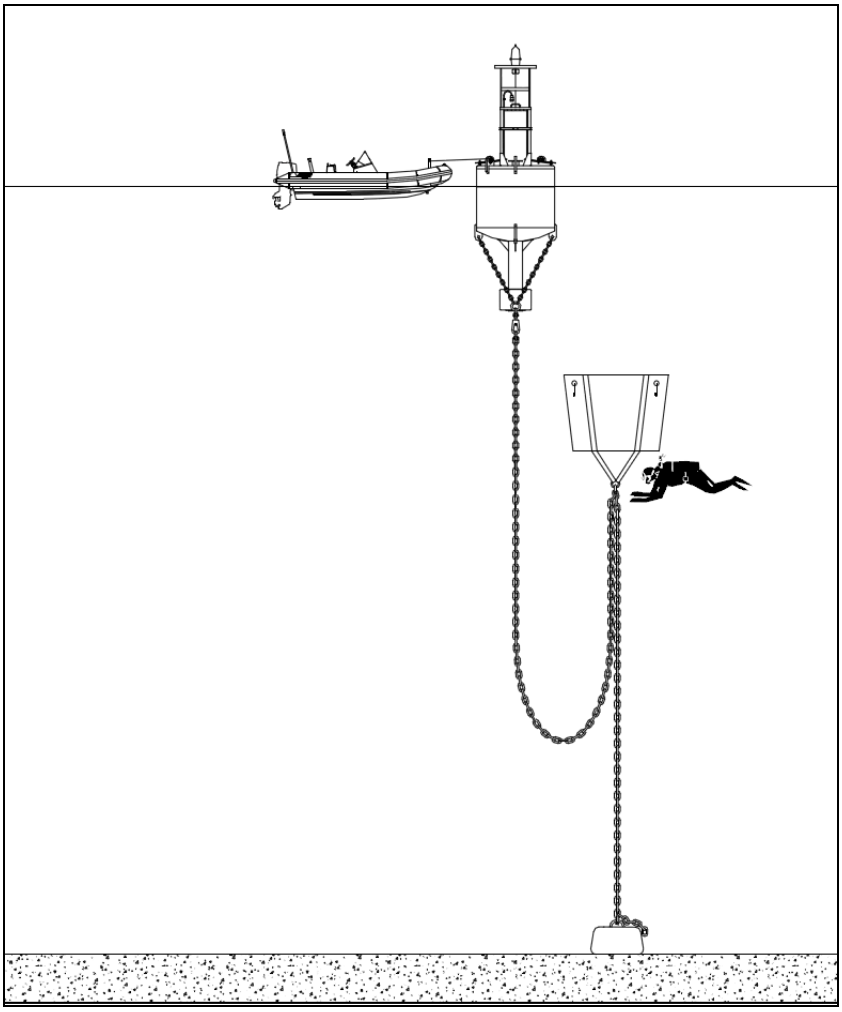

Figure 3-7 Using a lift bag to free chain

WARNING: ***A suspended load can break free and trap or injure divers. Avoid operating beneath a suspended load.***

Section C: Lifting Operations

C.1. Introduction

Divers need to bring ATON moorings and components to the surface for bundling and maintenance. Divers use lift bags for lifting operations.

C.2. Lift Bags

Lift bags are available in a range of sizes and configurations. The two most common types are open (parachute-type) and enclosed (pillow-type).

CAUTION:

Carefully handle lift bags to avoid snags, tears, and punctures. Do not drag lift bags over or against sharp objects. When removing the load from the water with the lift bag attached, take care to prevent the bag from becoming pinched or trapped in the rigging. To reduce the risk of damage, consider using a tag line to hold the bag out of the way.

C.2.a. Open (Parachute-type) Lift Bags

Open (parachute-type) bags allow expanding air to simply escape out of the bottom of the lift bag during ascent.

Figure 3-8 Open (parachute-type) lift bags

C.2.b. Enclosed (Pillow-type) Lift Bags

Enclosed (pillow-type) lift bags are totally enclosed and equipped with pressure relief valves to prevent damage from expanding air during ascent. Enclosed lift bags are best suited for operations where objects need to be lifted or towed in shallow water. These bags can attain maximum lifting capacity in more shallow water than open lift bags.

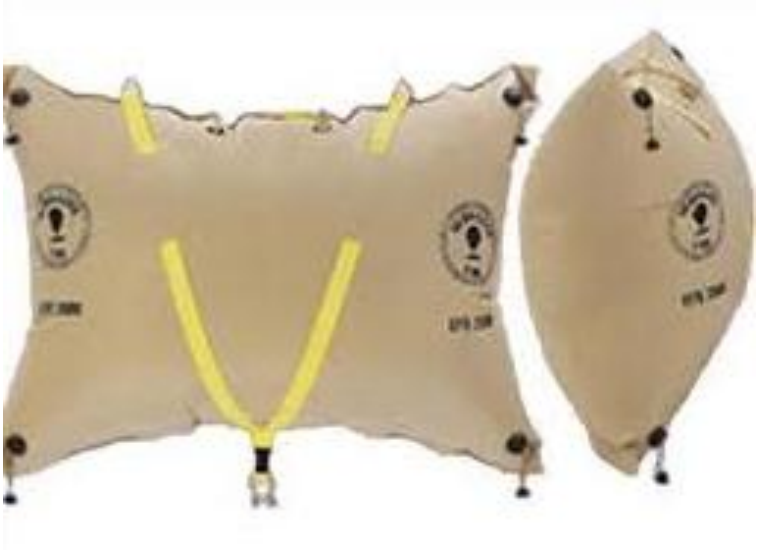

Figure 3-9 Enclosed (pillow-type) lift bags

C.2.c. Lifting Capacity

Ensure adequate lifting capacity is available for the required evolution. Consider using additional lifting capacity to overcome suction effects for partially buried objects.

C.3. Lift Bag Deployments

Lift bags are extremely difficult to submerge with any air trapped inside. The most effective method of transporting an open lift bag to the bottom is to lay it out on the surface and submerge the top end first, thereby allowing air to escape out of the bottom. Submerge enclosed lift bags by venting a relief valve at the highest point while pulling the bag under water.

Figure 3-10 Swimming down the lift bag

NOTE: **Attaching the lift bag to the short stay line is an efficient means to transport it to the sinker while minimizing the risk of losing the bag.**

C.4. Rigging

Attach the lift bag to the lifting point selected for the specific evolution. After attaching the lift bag, connect the air source and partially inflate the bag to ensure all straps are properly positioned.

C.5. Ascent

All divers move off to a safe distance to ensure divers and equipment do not become entangled in rigging. Divers use signals to verify they are ready to commence the lift, then inflate the lift bag for ascent.

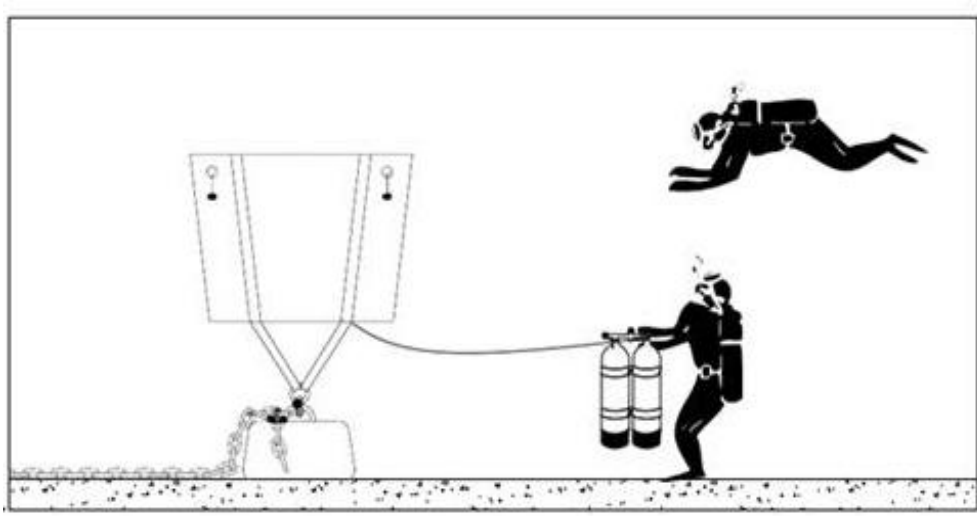

Figure 3-11 Verifying all divers clear before inflating the lift bag

C.6. Recovering the Lift Bag

Lift bags can be difficult to handle and can become hazardous to the boat crew trying to bring them on board. Lift open bags out of the water from the top of the bag, thereby preventing water from filling the bag.

Avoid completely deflating enclosed lift bags underwater to prevent water from filling the bags and adding weight.

Section D: Chain Bundling

D.1. Introduction

Mooring chain requires frequent replacement, even when the hull and sinker are in satisfactory condition. The dive team provides the capability to replace chain without having to move the sinker. The action of bundling chain occurs on shore, on deck, or underwater.

D.2. Chain Ends

Ensure the chain ends are of a length appropriate for the evolution. If the chain is going to be connected to a buoy, ensure the end is of sufficient length to facilitate connecting to the buoy, guideline, or swivel without having to release any chain from the bundle.

D.3. Chain Bundle Depth

When designing the chain bundle length, incorporate the overall draft, including the lift bag or buoy, and the bundle length. Tailor the bundle length according to the depth of water in the area of operations and transit routes. This action avoids dragging the chain bundle along the bottom.

CAUTION:

Dragging chain across the bottom requires a large amount of power and presents the possibility of fouling or damaging submarine cables or structures.

D.4. Chain Weight

Take the weight of chain into consideration when selecting a lift bag to float the chain bundle. A lift bag might not be required if a chain bundle is to be transported with a buoy hull.

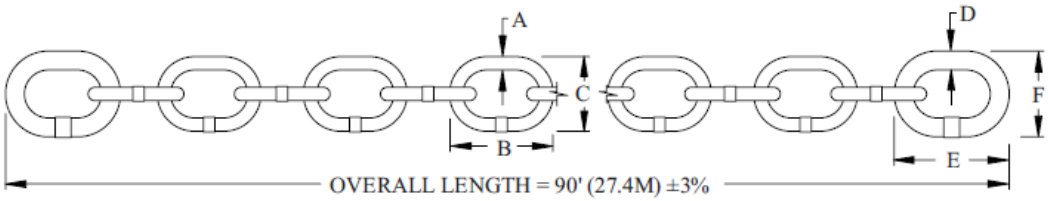

DIMENSIONS (INCHES)						PHYSICAL VALUES				
COMMON LINKS			END LINKS*			PROOF LOAD	BREAK LOAD	WEIGHT (LBS/FT)		DRY SHOT WEIGHT (LBS)
A	B	C	D	E	F				DRY	
1/2	3	1-7/8	3/4	4-1/2	2-11/16	7,500	15,000	2.33	2.03	210
3/4	4-1/2	2-11/16	7/8	5-1/4	3-1/8	16,000	32,000	4.88	4.24	440
7/8**	5-1/4	3-1/8	1-1/8	6-3/4	4	22,000	44,000	6.61	5.75	595
1	6	3-9/16	1-1/4	7-1/2	4-7/16	29,000	58,000	8.33	7.24	750
1-1/8	6-3/4	4	1-1/4	7-1/2	4-7/16	38,500	77,000	10.55	9.17	950
1-1/4	7-1/2	4-7/16	1-1/2	9	5-5/16	45,500	91,000	13.33	11.59	1,200
1-1/2	9	5-5/16	1-7/8	11-1/4	6-11/16	65,500	131,000	19.33	16.8	1,740
1-5/8**	9-3/4	5-13/16	1-7/8	11-1/4	6-11/16	76,500	163,000	22.52	19.59	2,027
1-3/4	10-1/2	6-1/4	2-1/8	12-3/4	7-7/16	86,500	173,000	26.11	22.70	2,350
1-7/8	11-1/4	6-11/16	2-1/8	12-3/4	7-7/16	100,000	200,000	30.00	26.08	2,700
2	12	7-1/8				116,000	232,000	34.33	29.85	3,090
2-1/8	12-3/4	7-9/16				131,000	262,000	38.66	33.62	3,480
2-1/4	13-1/2	8-1/16				147,000	294,000	43.44	37.78	3,910

* End links are currently provided on 1/2" chain only. The dimensions for end links on the other chain sizes are shown in this table for reference purposes.

** 7/8" and 1-5/8" chain is no longer being manufactured. The dimensions for these chain sizes are shown in this table for reference purposes.

Figure 3-12 Chain weight specifications

D.5. Surface Bundling

Prepare chain for diver deployment before transporting it from the buoy deck or pier to the aid location. The two primary considerations are the ability to remove the lifting sling once the load is floating on the surface and the ability to deploy the chain in a controlled manner once on station.

D.5.a. Preparation on Deck

When faking out the chain on deck, arrange it so the chain end is free and the picks can be released individually to provide the greatest amount of control during deployment. Consider the depth of water during transit routes to determine the pick lengths. To clearly differentiate the bottom and top ends, consider marking them with highly visible contrasting colors or markings such as line, rags, paint, and zip ties.

Attach the lift bag to the load below the lifting point of the sling. This permits the sling to be pulled clear once the load is suspended by the lift bag.

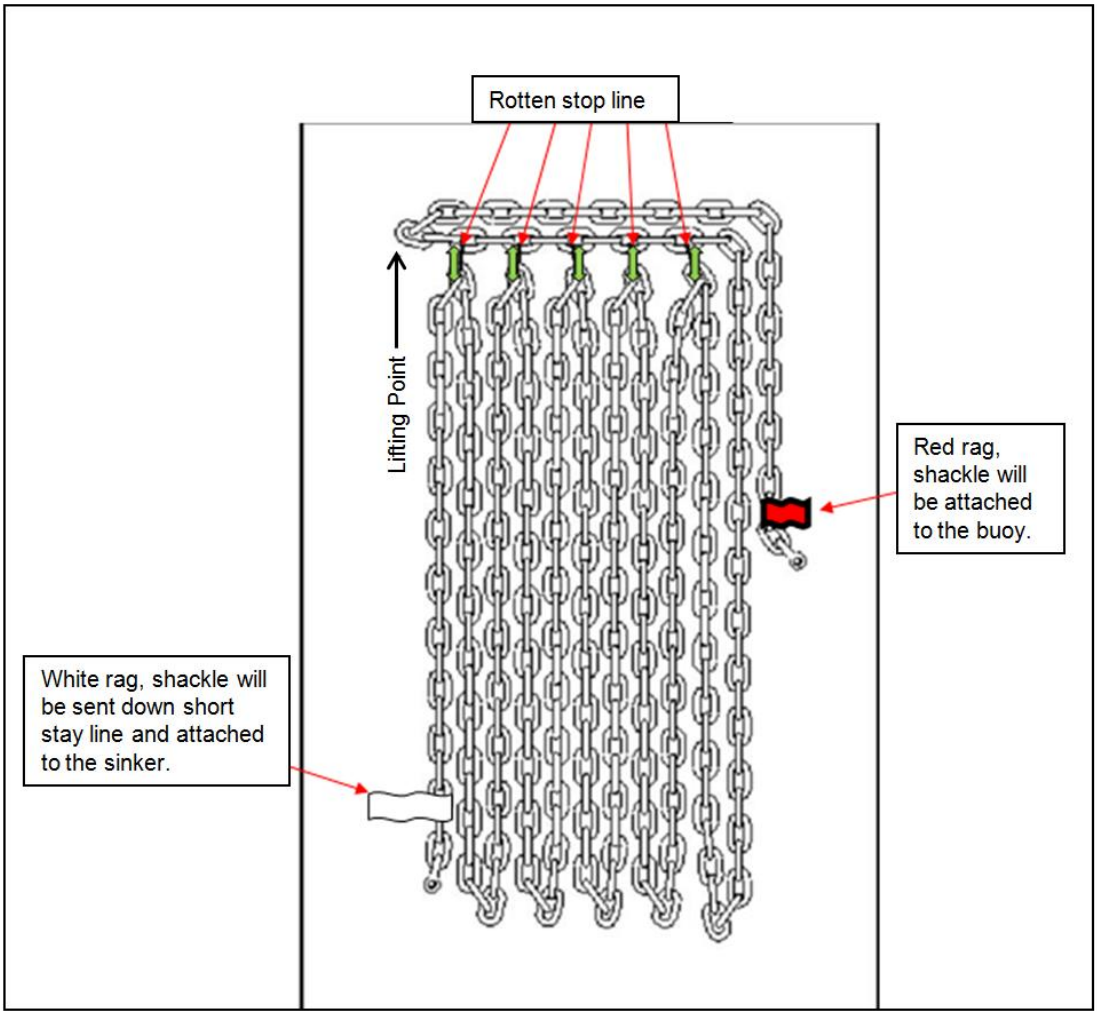

Figure 3-13 Chain bundle faked out on deck

D.5.b. Floating the Bundle

The chain bundle is now ready to be lowered into the water with the crane. Once the bundle is in the water and the lift bag takes the load, remove the lifting sling, thereby allowing the bundle to be towed to the aid location.

D.6. Underwater Bundling

The following subsections detail procedures to perform underwater bundling.

D.6.a. Taking Picks

Use lift bags to take picks. Once the first pick is taken, assess the depth of the chain to determine if additional picks are needed. Use a depth gauge as needed to verify the depth of the chain prior to towing the bundle.

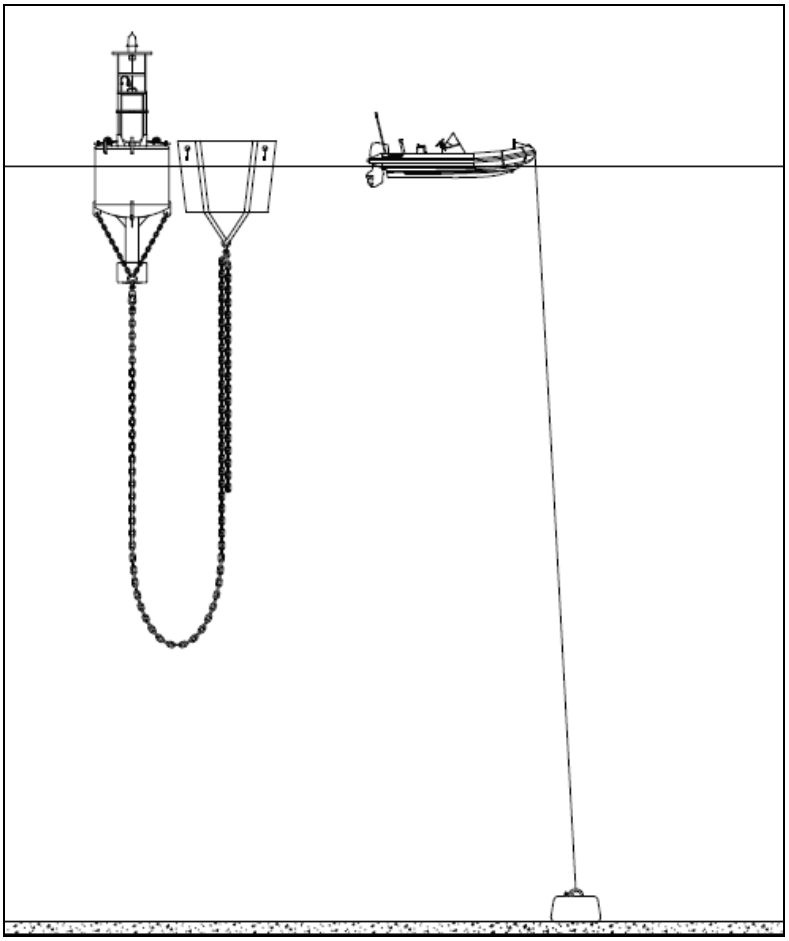

Figure 3-14 Using a lift bag to take a pick

D.6.b. Securing the Bundle

Once the picks are taken, pass a line around or through the top of the chain loops to secure the bundle. Ensure the line is of adequate strength to hold the load when it is lifted out of the water.

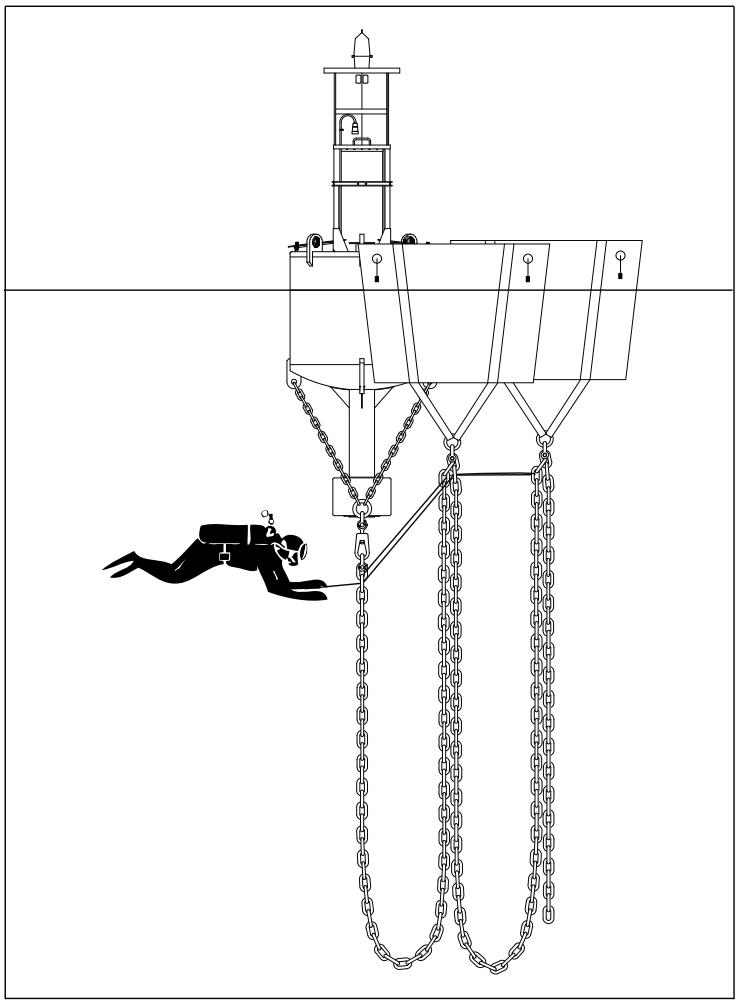

Figure 3-15 Securing the chain bundle

Deflate and remove the lift bags once the bundle is secure. The buoy will carry the weight of the suspended load.

Section E: Top Disconnect/Reconnect

E.1. Introduction

Use top disconnect/reconnect procedures when the chain is removed or attached to the buoy bridle or mooring bail.

E.2. Strain Removal

The weight of the chain on the buoy bridle or mooring bail makes it difficult to remove the shackle pin. It is best practice to straighten the split key while the weight of the chain holds the pin firm. Attach a lift bag to a point on the chain beneath the hull to remove the strain from the chain. If reconnecting the chain to another hull, leave sufficient length on the chain end to reconnect.

Figure 3-16 Using lift bags to remove strain from shackle

E.3. Top Disconnect

Use the split key spreaders to straighten the split key to facilitate removal from the clevis. See Chapter 2: ATON Mission Planning, Section B.10. Split Key Spreaders.

If the split key cannot be adequately straightened with the split key spreaders, use Vise-Grips™ or a clamp to remove any remaining bends.

E.4. Top Reconnect

When working on larger aids, the weight of the bridle and the weight of the chain can present a challenge when reconnecting the chain end to the bridle. Tie a line near the chain end and pass it through the swivel or buoy bail as a fairlead to reduce the effort required to pull them together. Secure the line to reduce the effects of wave action while making the connection.

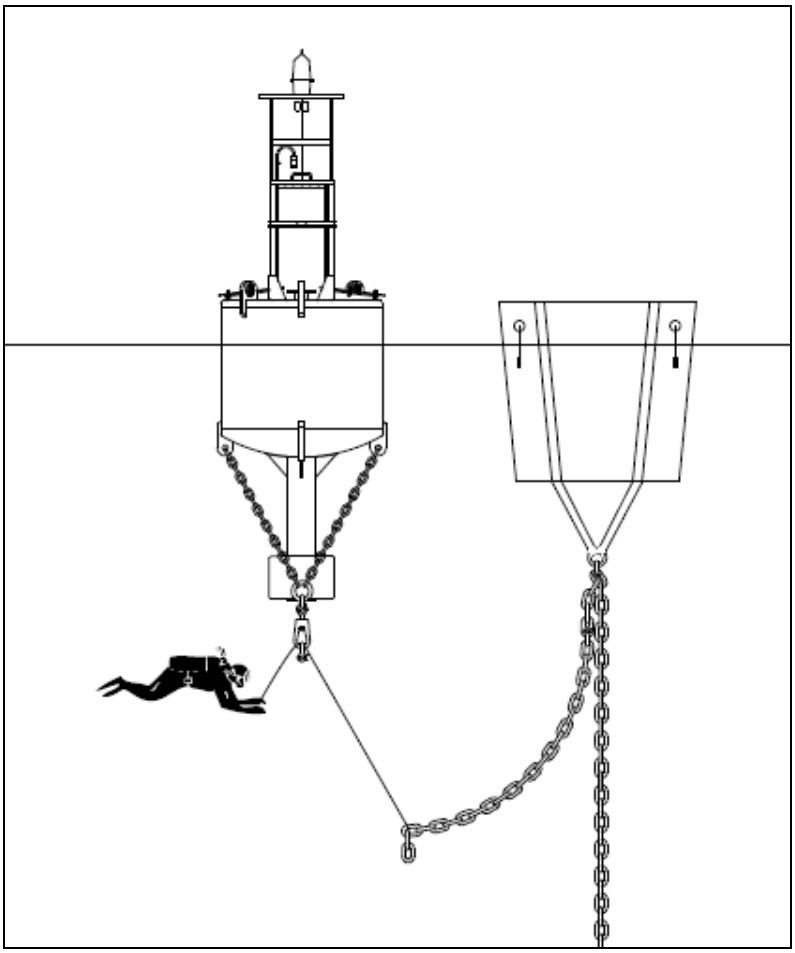

Figure 3-17 Using a fairlead to assist with top reconnect

With the pin in place, use the split key spreaders to open the split key to a 30- to 45-degree angle. Remove the lift bag once the split key is opened.

Section F: Bottom Disconnect/Reconnect

F.1. Introduction

Perform bottom disconnect/reconnect when the chain needs to be removed or attached to the sinker bail.

F.2. Bottom Disconnect

The primary considerations for this procedure are maintaining control of the aid once disconnected from the sinker and marking the sinker when leaving the area.

Figure 3-18 Divers performing a bottom disconnect

F.2.a. Approach

Upon arrival, follow the procedures for mooring the boat per Section A: Short Stay. Before disconnecting the chain follow procedures for marking a sinker per Section B: Sinker Management. Disconnect the chain from the sinker once the short stay line with marker is attached. Follow the procedures per Paragraph D.6.b. Securing the Bundle prior to towing operations.

F.3. Bottom Reconnect

The primary considerations for bottom reconnect are deploying chain to the sinker and ensuring divers are away from the load when the chain is deployed.

F.3.a. Approach

Tow the chain on station bundled beneath a buoy hull or lift bag.

F.3.b. Deploying Chain

Shackle the bottom end of the new mooring to the short stay line. Make the short stay line taut to facilitate direct deployment of the chain to the sinker.

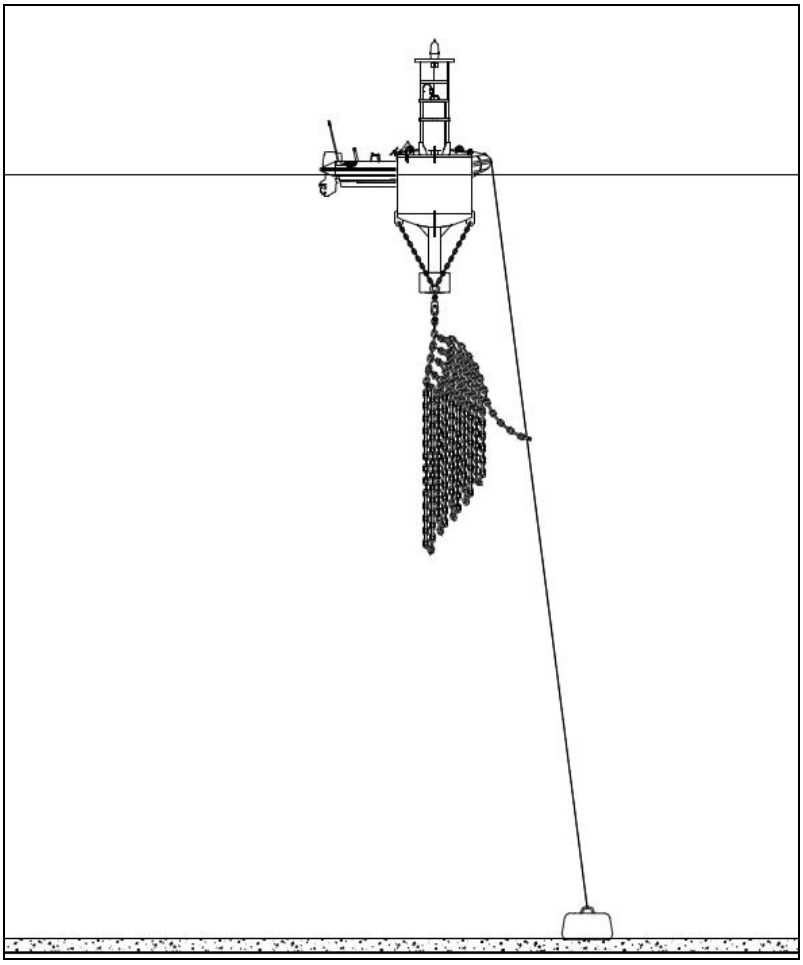

Figure 3-19 Shackling end of chain to short stay line

When deploying the chain, cut the rotten stop in sequence to allow the chain end to reach the sinker first.

WARNING: ***Stay clear of chain while cutting rotten stop to avoid entanglement.***

F.3.c. Connecting Bottom End

When deployed properly, the chain end arrives on the bottom in close proximity to the sinker bail. Once the chain end reaches the sinker, cast off or slack line to the buoy, allowing it to drift off and preventing the chain from piling up and becoming twisted or fouled on the sea floor. Attach the chain to the sinker with the shackle three links up from the chain end, thereby providing for a pig tail.

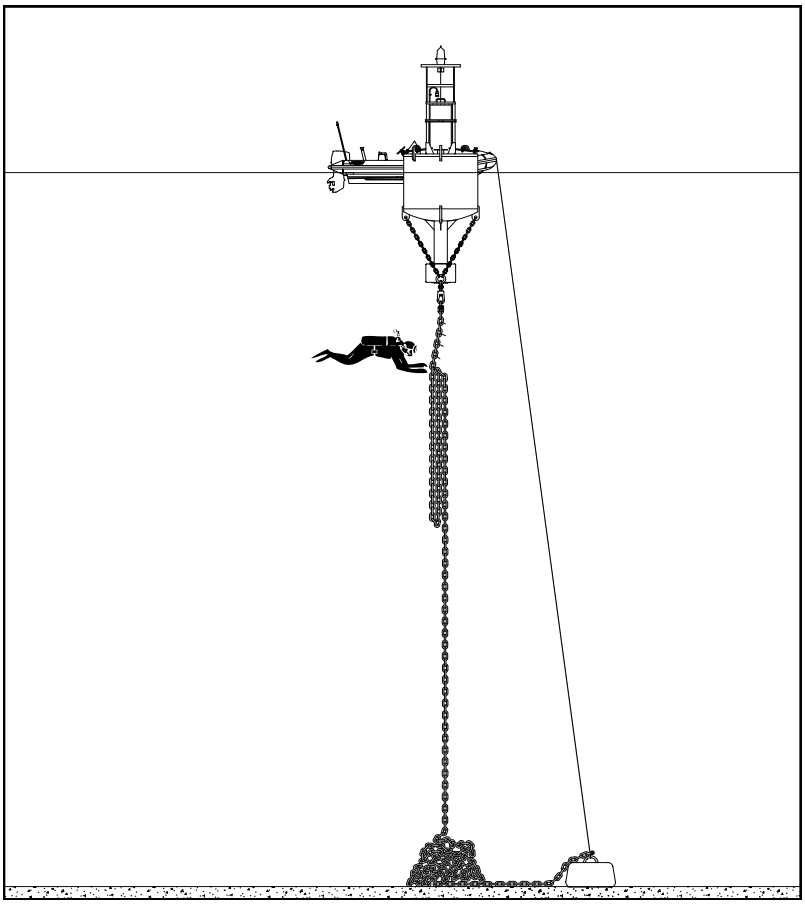

Figure 3-20 Deploying chain directly to the sinker

F.3.d. Recovery

Detach and recover the short stay line to the boat.

Section G: Setting the Aid

G.1. Introduction

Setting the aid is accomplished by lowering the sinker and putting it as close as possbile to AP.

WARNING:

When setting an aid, the greatest potential hazard is the diver becoming entangled while the sinker is descending. Ensure equipment is clear of the sinker and chain prior to deploying the sinker.

G.2. Maneuvering to a Marked Position

Mark the AP for the aid with a marker float prior to bringing the aid on scene or use aid positioning software to place the aid.

G.3. Deploying the Sinker

Deploy the sinker once it is at the AP. The preferred method of releasing the entire load at once is to vent the lift bag using the dump valves while ensuring divers remain above the load. If cutting the rotten stop line to release the load, ensure the lift bags and the load have a clear path of travel. Once the sinker is on bottom, verify the chain is not fouled and verify the buoy position with aid positioning software to confirm it is at the AP.

WARNING:

Cutting the rotten stop line positions the diver between the load and the lift bag, thereby increasing the risk of becoming entangled.

Section H: Towing Operations

H.1. Introduction

During ATON diving operations, there are circumstances that require towing an aid, including a suspended load. Towing a suspended load requires special precautions. For more information, see reference (c), Aids to Navigation Manual Seamanship, COMDTINST M16500.21 (series).

H.2. Attachment Point

When towing an aid, make off the tow line to the buoy hull or the lift bag shackle, not the sinker. Variations in configuration between the lift bag and the load will determine the best position for attaching the tow line.

CAUTION:

When towing chain, the possibility of pinching and entangling the tow line exists due to the dynamic resistance on the links.

H.3. Lift Bags

Exercise caution when towing a load suspended by an open bottom lift bag. Tow at a low rate of speed to reduce the risk of accidental venting of the lift bag. This is not a risk when towing with a pillow-type lift bag.

H.4. Divers in the Water

Divers can be deployed during a towing evolution to assist in the successful relocating of ATON. Prior to commencing evolutions, communicate safe launch/recovery and surface positioning of divers in the water during boat operations.

Divers operate in close proximity to cutters and boats, assisting in the towing evolution to attach a tow line, add more lifting air, or dump the air from a lift bag once the load is on station. Upon approaching AP, divers can be deployed to manually dump air from lift bags, thereby ensuring no fouling exists between the tow line and the load. Discuss signals for dumping air and dropping the load with the divers prior to the evolution.

Chapter 4: Standard ATON Diving Evolutions

Introduction This chapter discusses standard ATON diving evolutions.

In This Chapter This chapter contains the following sections:

Section	Title	Page
A	Mooring Inspection	4-2
B	Mooring Replacement	4-3
C	Aid Relief	4-6
D	Repositioning	4-8
E	Sunken Aid Recovery	4-9

Section A: Mooring Inspection

A.1. Introduction

Divers perform mooring inspections to determine the condition of the mooring.

A.2. Sequence

Divers deploy down the chain, inspecting the entire mooring, including the bridle, swivel, chain, sinker, and associated hardware. See reference (f), Aids to Navigation Manual Technical, COMDTINST M16500.3 (series) for parameters of inspection and measurements for various buoy types.

During inspections, note and report any abnormalities; for example, deformed chain or damaged sinker, to the diving supervisor. Measure several chain links in the chafe section using the vernier caliper. Report the lowest value to the diving supervisor.

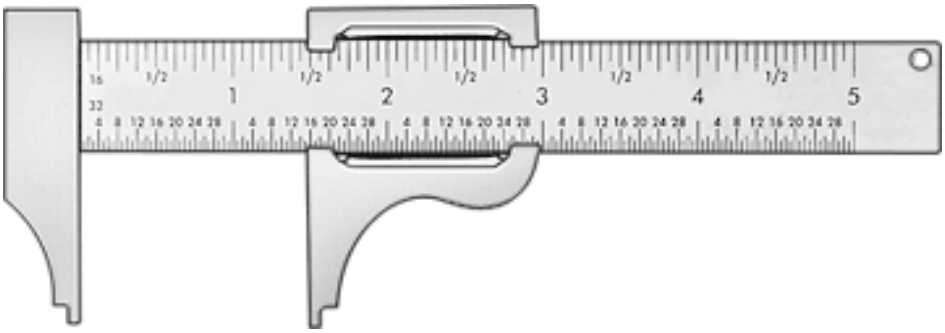

Figure 4-1 Vernier caliper

A.3. Strain Relief

When chain is surging, divers use a line to take the strain off the chain and create a small chain loop to safely rotate links and measure wear.

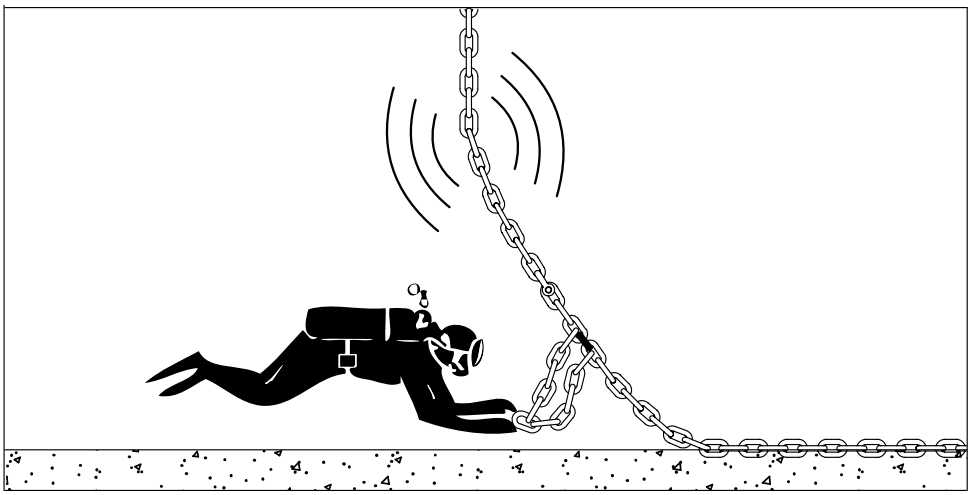

Figure 4-2 Using strain relief for chafe measurement

Section B: Mooring Replacement

B.1. Introduction

The supporting ATON unit directs mooring replacement. Perform mooring replacements per scheduled maintenance or as a result of a mooring inspection.

B.2. Sequence

The sequence for this evolution depends on whether the entire mooring is being replaced or only the chain is being replaced.

B.2.a. Entire Mooring

In rare circumstances, it might be necessary to swap an old mooring with a new one while leaving the buoy in place. Depending on conditions and team preference, the evolutions might occur in other sequences than presented here.

1. The evolution begins with deployment of a complete mooring (mooring chain and sinker) suspended by one or more lift bags. The boat takes the mooring in tow for transit to the aid AP.
2. Upon arrival at the aid, bring the boat to short stay, and ATON positioners perform a position check. Once the position check is complete, make off a line to the buoy and slack the short stay line.
3. Perform lifting operations to relieve the weight of the chain from the split key shackle that attaches the old mooring chain to the buoy.
4. Perform a top disconnect to remove the old mooring chain from the buoy.

Figure 4-3 Divers performing a top disconnect

5. Depending on the length of chain and depth of water, the divers can choose to take another pick of chain to begin chain bundling prior to lifting the sinker off the bottom.
6. Perform lifting operations to raise the sinker, and bundle the remaining chain.
7. Move the new mooring bundle into position next to the buoy, then perform a top reconnect.
8. Once the new mooring is connected to the buoy, begin setting the aid.
9. With the sinker on the bottom, perform the short stay procedure to allow the ATON positioners to conduct a position check.
10. After the position is verified, tow the old mooring bundle back to the cutter or port.

B.2.b. Chain-only Mooring

A common ATON diving evolution is to swap out the old mooring chain with a new one.

1. Deploy a mooring chain bundle suspended by a lift bag. The boat takes this bundle in tow for transit to the aid AP.
2. Upon arrival at the aid, divers bring the boat to short stay, and positioners perform a position check. Once the position check is complete, make off a line to the buoy and slack the short stay line as necessary.
3. Perform a bottom disconnect to release the mooring from the sinker and conduct chain bundling with the weight of the chain suspended by a lift bag.
4. Once the old mooring chain is bundled under a lift bag, perform a top disconnect to remove the old mooring chain from the buoy.
5. Move the new mooring chain bundle next to the buoy and perform a top reconnect.
6. Once the new mooring chain is connected to the buoy, make the short stay line taught, shackle in the bottom end of the chain to the short stay line, and deploy the chain to the sinker.
7. Perform a bottom reconnect with the new mooring chain.
8. Tow the old mooring chain bundle back to the cutter or port.

NOTE: **The supported ATON unit has the discretion to flip the chain end-for-end when chafe is worn but within tolerance to extend the use of the chain. Flipping the chain relocates the worn part to an area outside of the chaff zone. Divers use top and bottom disconnect procedures to complete an end-for-end evolution.**

Section C: Aid Relief

C.1. Introduction

Perform aid reliefs to include the hull, the hull and chain, or the entire aid. Divers can leave the sinker in place if only the hull or hull and chain require relief.

C.2. Sequence

The sequence of events for this evolution depends on whether the hull, hull and chain, or the entire aid are being relieved.

C.2.a. Entire Aid

In rare circumstances, it might be necessary to replace an entire aid (buoy, chain, and sinker). Some evolutions might not be needed or might be performed in other sequences depending on the situation and team preference. These procedures assume an existing aid is to be replaced by a new one.

1. The evolution begins with deployment of a mooring bundle suspended by the new buoy and one or more lift bags. The boat takes the buoy and mooring bundle in tow for transit to the aid AP.
2. Upon arrival at the aid, divers bring the boat to short stay, and the positioners perform a position check. Once the position check is complete, make off a tow line to the old buoy and slack the short stay line as necessary.
3. Perform lifting operations and chain bundling to secure the old mooring beneath the old buoy. The lift bag(s) should carry the weight of the sinker and the divers remove the short stay line.
4. Once the old mooring is lifted and bundled, follow the procedures for setting the aid to set the new mooring on AP.
5. Conduct the short stay procedure to allow positioners to perform a position check.
6. After the position is verified, tow the old aid back to the cutter or port.

C.2.b. Hull and Chain

Perform the following steps to relieve a buoy hull and chain:

1. The evolution begins by deploying a mooring chain bundle suspended by a new buoy. The boat takes the buoy and mooring bundle in tow for transit to the aid AP.
2. Upon arrival at the aid, bring the boat to short stay, and positioners perform a position check. Once the position check is complete, make off a tow line to the old buoy and slack the short stay line as necessary.
3. Perform a bottom disconnect to release the mooring from the sinker and conduct chain bundling with the load suspended by the buoy.

4. Maneuver the new buoy and mooring chain bundle into position, so that the bottom end of the mooring chain can be shackled to the short stay line. Ensure the short stay line is taught prior to cutting the rotten stop.
5. Perform a bottom reconnect with the new mooring chain.
6. Tow the old buoy back to the cutter or port.

C.2.c. Hull Only

Perform the following steps to conduct buoy hull relief:

1. The evolution begins with deployment of a new buoy taken in tow by the boat for transit to the AP.
2. Upon arrival at the aid, divers bring the boat to short stay, and positioners perform a position check. Once the position check is complete, make off a tow line to the old buoy and slack the short stay line as necessary.
3. Perform lifting operations to relieve the strain from the split key shackle that attaches the mooring chain to the buoy. At this point, all the weight of the mooring chain is supported by the lift bag.
4. Perform a top disconnect to release the mooring chain from the buoy.
5. Move the new buoy into position and perform a top reconnect. Once the mooring chain is connected to the new buoy, vent and detach the lift bag.
6. Tow the old buoy back to the cutter or port.

Section D: Repositioning

D.1. Introduction

When an aid is found off station and no hardware replacement is necessary, reposition the aid by lifting the sinker and resetting it on station.

NOTE: **When repositioning an aid a short distance, it might be appropriate to tow by the sinker rather than the lift bag shackle.**

D.2. Sequence

Perform the following steps to reposition an aid:

1. Use a marker float and weight to mark AP.
2. Upon arrival at the aid, divers connect the short stay line to the sinker. The short stay line remains slack until taken in tow by the boat.
3. Attach the lift bag to the chain at a point that allows the sinker to be raised only high enough to clear any obstacles in the path to AP. Perform lifting operations to raise the sinker off the bottom.
4. Tow the aid into position and release it by performing the setting the aid procedures.
5. With the sinker set, bring the boat to short stay and conduct a position check to ensure the aid is left on station.

Section E: Sunken Aid Recovery

E.1. Introduction

When an aid is reported missing, it could have sunk while remaining in close proximity to its AP. Perform a search using the most recent position data to locate the aid. Recover the aid by using lift bags or a buoy tender.

CAUTION:

A hull that appears to have settled on the bottom might be lively due to trapped air.

E.2. Planning Considerations

The following circumstances can affect this evolution:

- Bottom report.
- Condition and orientation of the buoy and mooring.
- Buoy is wholly or partially "mudded in."
- Buoyancy and liveliness of the buoy.

E.3. Buoy Tender Recovery

Once the aid is located, attach a short stay line to one of the lifting bails. Deploy and attach a chain bundle to the lifting bail. Discuss with the buoy deck supervisor whether an alternative lifting point is preferred or required.

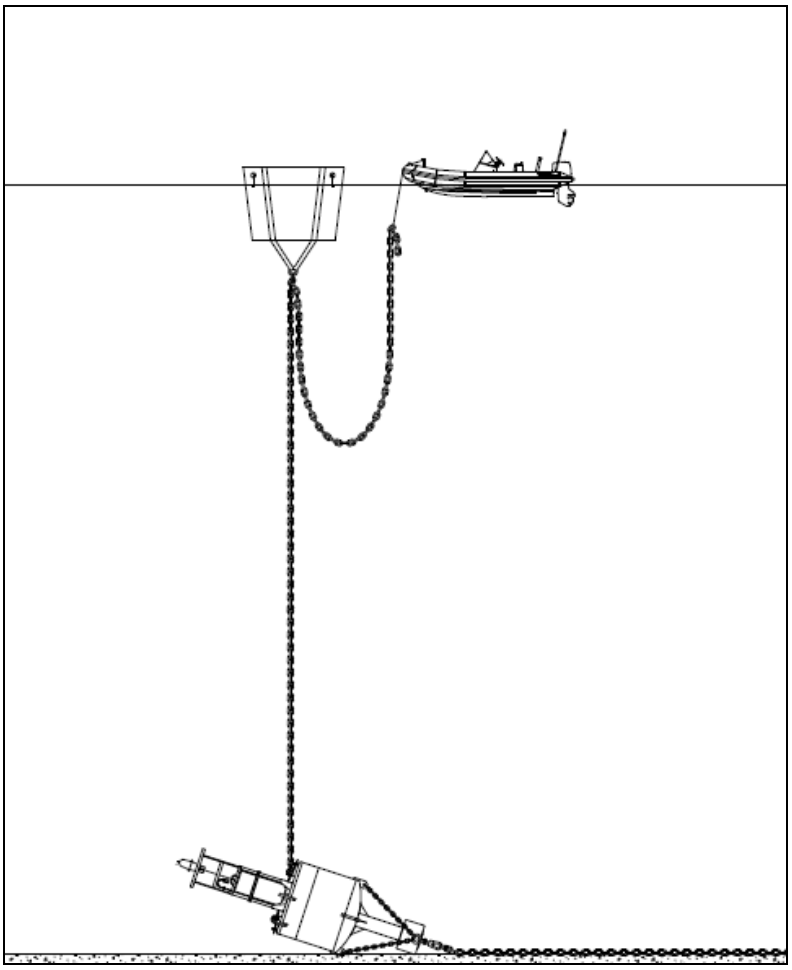

Figure 4-4 Attaching chain to a sunken hull for tender recovery

Lift the chain with a tagline run to the boat crew. Ensure the length of the chain is adequate for the boat crew to be able to transfer control from the boat to the buoy deck without requiring the tender to maneuver too close to the lift bag.

E.4. Best Practices	The following best practices reflect lessons learned for marking a sunken aid for recovery by a buoy tender.
E.4.a. Temporary Buoy	Bring the sunken aid to short stay. Assemble a temporary buoy with a bundle of chain and attach it to the short stay line. Once the short stay line is taut, deploy the chain and connect it to the sunken aid with a shackle. Once the divers and boat are clear, the buoy tender moves in to retrieve the aid.
E.4.b. Mooring Line	A mooring line of sufficient length and size to support the load can be used in lieu of chain to recover a sunken buoy. Divers attach the mooring line to the lifting bail on the aid with a shackle. Divers pass the mooring line to the buoy tender directly or with a messenger.

This page intentionally left blank.

Appendix A: Glossary and Acronyms

AP	Assigned position. The position assigned to an aid to navigation in terms of latitude and longitude.
ATON	Aids to navigation. Any sort of marker that aids the traveler in navigation.
Authorized for military use	Selected diving equipment, tools, and accessories that have undergone design safety reviews, testing, and evaluation to ensure safety and acceptability.
Bail	A metal lifting eye secured to an object.
Best practice	An innovative or modified practice that results in an improved or more effective response.
Blacksmith's hammer	Double-headed hammer used for cleaning growth around mooring attachments prior to inspection or removal.
CGTTP	Coast Guard tactics, techniques, and procedures.
Chafe	The section of a buoy mooring chain between the riser and bottom sections.
Chain bridle	Two short lengths of chain connected by an iron ring; used in connecting mooring chain to buoys.
Clevis	A U-shaped metal piece with a hole in each end through which a pin or bolt is run.
DV	USCG divers rating.
Fairlead	Device used to guide a line, rope, or cable around an object out of the way or to stop it from moving laterally.
FID	Federal Aid Information Document. Service record for a particular aid.

Fill whip	A standard fill whip consists of a low-pressure air hose attached to a first-stage regulator.
Lift bag	A buoyant lifting device attached to a sunken object. Air is pumped into the buoyant device to give positive buoyancy.
Marker float	A small fender or other highly visible float used to temporarily mark a location or item.
Messenger	A smaller line attached to the eye of a hawser to facilitate passing the hawser to a vessel or pier.
Mooring	All components of a floating aid with the exception of the buoy. The mooring serves to hold the floating aid at its assigned position.
Mudded in	Wholly or partially covered in the silt, mud, or sand of the sea floor.
PWCS	Ports, waterways, and coastal security.
Rigging-for-slip	A secure, but temporary method of tying off a boat to an object whereby a line is passed around or through the object and returned to the boat and made off.
Riser	The riser is the section of chain between the chafe and the buoy or bridle.
Rotten stop	A small line, usually 1/4-inch fiber line (six-thread) used to lash bights of mooring chain.
Short stay	Having the boat made off to the sinker with zero or minimal slack, thereby holding the boat directly over the sinker with no excursion.
Split key punch	Device primarily used to drive a split key out of the shackle pin slot.
Split key shackle	A chain shackle whose pin is secured by spreading the tines of a flat split key rove through the end of the pin.
Split key spreaders	Split key spreaders consist of two bars with slots welded to one end. Once the split key is driven open enough for the ends to be inserted into the slots, the key can be split by the diver pulling the bars apart.

Tag line	A line used to steady a load being hoisted and moved with weight handling gear.
TTP	Tactics, techniques and procedures.
UWSH	Underwater ship husbandry.
USCG	United States Coast Guard.
Vernier caliper	A linear measuring instrument consisting of a scaled rule with a projecting arm at one end, to which is attached a sliding vernier with a projecting arm that forms a jaw with the other projecting arm.

This page intentionally left blank.