PART

3

CHAPTER

2 Hull Structures and Arrangements

CONTENTS

SECTION 1 Longitudinal Strength 27

1 General 27

3 Longitudinal Hull Girder Strength 27

3.1 Minimum Section Modulus 27

3.3 Vessels 61 m (200 ft) in Length and Over 28

3.5 Hull Girder Moment of Inertia 32

5 Decks 32

5.1 Strength Decks 32

5.3 Effective Lower Decks 32

7 Longitudinal Strength with Higher-Strength Materials 32

7.1 General 32

7.3 Hull Girder Moment of Inertia 33

7.5 Hull Girder Section Modulus 33

9 Loading Guidance 33

9.1 Loading Manual and Loading Instrument 33

9.3 Allowable Stresses 33

11 Section Modulus Calculation 33

11.1 Items Included in the Calculation 33

11.3 Effective Areas Included in the Calculation 34

11.5 Section Modulus to the Deck or Bottom 34

11.7 Section Modulus to the Top of Hatch Coamings 34

13 Continuous Longitudinal Hatch Coamings and Above-Deck Girders 34

FIGURE 1 Sign Convention 28

FIGURE 2 Distribution Factor M 29

FIGURE 3 Distribution Factor F_1 30

FIGURE 4 Distribution Factor F_2 30

SECTION 2 Shell Plating 41
1 General 41
3 Bottom Shell Plating 41
3.1 Extent of Bottom Plating 41
3.3 Bottom Shell Plating 41
3.5 Bottom Forward 42
5 Side Shell Plating 42
5.1 General 42
5.3 Recommendation for Vessels Subject to Impact 43
5.5 Side Shell Plating at Ends 43
5.7 Forecastle and Poop Side Plating 43
7 Bow and Stern Thruster Tunnels 44
9 Local Strengthening for Research Vessels 44
11 Compensation 44
13 Breaks 44
15 Bilge Keels 44
17 Higher-strength Materials 45
17.1 General 45
17.3 Bottom Plating of Higher-strength Material 45
17.5 Side Plating of Higher-strength Material 45
17.7 End Plating 45

SECTION 3 Deck Plating 47
1 General 47
3 Deck Plating 47
3.1 All Decks 47
3.3 Strength Decks within the Midship 0.8L 48
3.5 All Strength Deck Plating Outside the Line of Openings and Other Effective Deck Plating 48
5 Compensation 49
7 Wheel Loading 49
9 Higher-strength Material 50
9.1 Thickness 50
9.3 Wheel Loading 51

FIGURE 1 Wheel Loading Curves of K 50

SECTION 4 Bottom Structure 53
1 Double Bottoms 53
1.1 General 53
1.3 Center Girder 53
1.5 Side Girders 54
1.7 Floors 54
1.9 Frames 54
1.11 Struts 55
1.13 Inner-bottom Plating 55

1.15 Sea Chests 56
1.17 Access, Lightening, Air, and Drainage Holes 56
3 Single Bottoms with Floors and Keelsons 56
3.1 General 56
3.3 Center Keelsons 57
3.5 Side Keelsons 57
3.7 Floors 58
5 Single Bottoms with Longitudinal or Transverse Frames 59
5.1 General 59
5.3 Bottom Girders and Transverses 61
5.5 Center Girder 62
5.7 Frames 62
7 Fore-end Strengthening 63
7.1 General 63
7.3 Extent of Strengthening 63
7.5 Longitudinal Framing 63
7.7 Transverse Framing 64
9 Higher-strength Materials 64
9.1 General 64
9.3 Inner-bottom Plating 64
9.5 Bottom and Inner-bottom Longitudinals 65
9.7 Center Girders, Side Girders and Floors 65
11 Machinery Space 65
11.1 General 65
11.3 Engine Foundations 65
11.5 Thrust Foundations 66
11.7 Shaft Stools and Auxiliary Foundations 66

TABLE 1 Location of Flat of Bottom Forward 63
TABLE 2 Spacing of Floors 64

FIGURE 1 Plate Floors 59
FIGURE 2 Round Bottom Floors with Deadrise 60
FIGURE 3 Transverse Bottom Frames with Longitudinal Side Girders 60
FIGURE 4 Longitudinal Frames with Transverse Webs 61

SECTION 5 Side Frames, Webs, and Stringers 67
1 General 67
1.1 Basic Considerations 67
1.3 End Connections 67
3 Longitudinal Side Frames 67
3.1 Section Modulus 67

5 Transverse Side Frames....68
5.1 Section Modulus....68
5.3 Tween-deck Frames....70
5.5 Peak Frames....70
7 Side Web Frames....71
7.1 Section Modulus....71
7.3 Tween-deck Web Frames....72
7.5 Proportions....72
7.7 Tripping Brackets and Stiffeners....72
9 Recommendation for Vessels Subject to Impact....72
11 Side Stringers....72
11.1 Section Modulus....72
11.3 Proportions....73
11.5 Tripping Brackets and Stiffeners....73

FIGURE 1 Transverse Side Frame....69
FIGURE 2 Transverse Side Frame....69
FIGURE 3 Hold and Tween Deck Frames....69

SECTION 6 Beams, Deck Girders, Deck Transverses, and Pillars....75
1 Beams....75
1.1 Spacing....75
1.3 Section Modulus....75
1.5 Special Heavy Beams....77
1.6 Deck Fittings....77
1.7 Container Loading....79
3 Deck Girders and Deck Transverses....80
3.1 General....80
3.3 Deck Girders and Transverses Clear of Tanks....80
3.5 Proportions....80
3.7 Tripping Brackets and Stiffeners....80
3.9 Deck Girders and Transverses in Tanks....80
3.11 Hatch Side Girders....80
3.13 Container Loading....81
3.15 End Attachments....81
3.17 Hatch-end Beams....81
5 Stanchions and Pillars....82
5.1 General....82
5.3 Permissible Load....83
5.5 Calculated Load....83
5.7 Stanchions in Double Bottoms and Under Tank Tops....84
5.9 Bulkheads....84
5.11 Attachments....84
7 Higher-strength Materials....84
7.1 General....84
7.3 Beams, Girders and Transverses of Higher-strength Materials....84

TABLE 1 Values of f 79

FIGURE 1 Application of Design Loads 78
FIGURE 2 Hatch-end Beams 82

SECTION 7 Watertight Bulkheads and Doors 85
1 General 85
1.1 Openings and Penetrations 85
3 Arrangement of Watertight Bulkheads 85
3.1 Collision Bulkheads 85
3.3 Engine Room 86
3.5 Chain Lockers 87
3.7 Hold Bulkheads 87
5 Construction of Watertight Bulkheads 87
5.1 Plating 87
5.3 Stiffeners 88
5.5 Girders and Webs 89
5.7 Corrugated Bulkheads 90
7 Watertight Doors 91
7.1 Vessels Requiring Subdivision and Damage Stability 91
7.3 Other Vessels 92
7.5 Construction 92
9 Testing 92

FIGURE 1 Reference Point of Vessels with Bulbous Bow 86
FIGURE 1A 87
FIGURE 1B 87
FIGURE 2 Corrugated Bulkhead 90
FIGURE 3 Corrugated Bulkhead End Connections 91

SECTION 8 Deep Tanks 93
1 General Arrangement 93
3 Construction 93
5 Construction of Deep-tank Bulkheads 93
5.1 Plating 93
5.3 Stiffeners 94
5.5 Corrugated Bulkheads 95
5.7 Girders and Webs 95
7 Tank Top Plating 95
9 Higher-strength Materials 95
9.1 General 95
9.3 Plating 95
9.5 Stiffeners 96
11 Drainage and Air Escape 96
13 Testing 96

SECTION 9 Superstructures and Deckhouses 97

1 Superstructure Scantlings 97

1.1 Side and Top Plating 97

1.3 Framing and Internal Bulkheads 97

1.5 Breaks in Continuity 97

1.7 Structural Support 97

3 Exposed Bulkheads of Superstructures and Deckhouses 97

3.1 General 97

3.3 Stiffeners 98

3.5 Plating 99

3.7 End Attachments 100

3.9 Raised-quarter-deck Bulkheads 100

5 Enclosed Superstructures 100

5.1 Closing Appliances 100

5.3 Sills of Access Openings 101

5.5 Means of Access 101

7 Open Superstructures 101

9 Deckhouses 101

10 Aluminum Deckhouses 101

10.1 Scantling Correction 101

10.3 Material Factors 102

10.5 Attachments 103

11 Helicopter Decks 103

11.1 General 103

11.3 Structure 103

11.5 Safety Net 104

11.7 Aluminum Decks 104

TABLE 1 Values of a 99

TABLE 2 Values of f 99

TABLE 3 Allowable Factors of Safety Based on Y for Helicopter Decks 104

SECTION 10 Keels, Stems, Stern Frames, Shaft Struts, and Propeller Nozzles 105

1 Keels 105

1.1 Bar Keels 105

1.3 Plate Keels 105

3 Stems 105

3.1 Bar Stems 105

3.3 Cast or Forged Stems 106

3.5 Plate Stems 106

5 Sternposts 106

5.1 Bar Sternposts 106

5.3 Cast, Forged, or Fabricated Sternposts 106

7 Stern Frames 106
7.1 Below the Boss 107
7.3 Above the Boss 108
7.5 Secondary Members 108
9 Stern Frames with Shoepieces 108
11 Shoepieces 109
11.1 General 109
11.3 Design Stress 109
11.5 Minimum Scantlings 109
13 Rudder Horns 110
15 Rudder Gudgeons 110
17 Shaft Struts 110
17.1 General 110
17.3 V Strut 110
17.5 I Strut 111
17.7 Strut Length 111
19 Propeller Nozzles 111
19.1 Application 111
19.3 Design Pressure 111
19.5 Nozzle Cylinder 112
19.7 Nozzle Section Modulus 113
19.9 Welding Requirement 114
21 Inspection of Castings 114

TABLE 1 Coefficient c 112
TABLE 2 Coefficient ε 112
TABLE 3 Coefficient c_n 113
TABLE 4 Corrosion Allowance t_c 113

FIGURE 1 Stern Frame 108
FIGURE 2 Shoepiece 110
FIGURE 3 Nozzle Ring Section View 114

SECTION 11 Rudders 115
1 General 115
1.1 Application 115
1.3 Rudder and Rudder Stock Materials 115
1.5 Expected Torque 116
1.7 Rudder Stops 116
3 Rudder Design Force 116
3.1 Rudder Blades without Cutouts 116
3.3 Rudder Blades with Cutouts 117
5 Rudder Design Torque 119
5.1 General 119
5.3 Rudder Blades without Cutouts 119

5.5 Rudders Blades with Cutouts 120
5.7 Trial Conditions....121
7 Rudder Stocks 121
7.1 Upper Rudder Stocks 121
7.3 Lower Rudder Stocks 121
7.5 Bending Moments....122
9 Rudder Flange Couplings 123
9.1 General....123
9.3 Horizontal Couplings 123
9.5 Vertical Couplings....124
11 Tapered Stock Couplings....124
11.1 Coupling Taper 124
11.3 Keyed Fitting....125
11.5 Keyless Fitting 125
11.7 Locking Nut....126
13 Pintles 126
13.1 General....126
13.3 Diameter 126
13.5 Shear and Bearing Forces....127
15 Supporting and Anti-Lifting Arrangements....128
15.1 Rudder Stock and Pintle Bearings....128
15.3 Rudder Carrier....129
15.5 Anti-Lifting Devices....129
17 Double Plate Rudder....129
17.1 Strength....129
17.3 Side, Top and Bottom Plating....131
17.5 Diaphragm Plates 131
17.7 Watertightness....131
19 Single Plate Rudders 132
19.1 Mainpiece Diameter....132
19.3 Blade Thickness 132
19.5 Arms 132

TABLE 1A Coefficient k_c for Ordinary Rudders....117
TABLE 1B Coefficient k_c for High-Lift/Performance Rudders 118
TABLE 2 Coefficient k_ℓ....120
TABLE 3 Coefficient α....120
TABLE 4 Minimum Bearing Force $B_{\min}$ 127
TABLE 5 Bearing Reaction Force 128
TABLE 6 Bearing Pressure 128

FIGURE 1 Rudder Blade without Cutouts 118
FIGURE 2 Rudder Blade with Cutouts 119
FIGURE 3 Tapered Couplings....125
FIGURE 4....130

SECTION 12 Protection of Deck Openings 139

1 General 139

3 Additional Requirements for Bulk Carriers, Ore Carriers and Combination Carriers 139

5 Positions and Design Pressures 139

5.1 Positions of Deck Openings 139

5.3 Design Pressures 139

7 Hatchway Coamings, Companionway Sills and Access Sills 140

7.1 Coaming and Sill Heights 140

7.3 Coaming Plates 141

7.5 Coaming Stiffeners 141

7.7 Continuous Longitudinal Hatch Coamings 142

9 Hatchways Closed by Portable Covers and Secured Weathertight by Tarpaulins and Battening Devices 142

9.1 Pontoon Covers 142

9.3 Wooden Hatch Covers 143

9.5 Steel Hatch Covers 143

9.7 Bearing Surface 144

9.9 Materials Other Than Steel 144

11 Hatchways Closed by Covers of Steel Fitted with Gaskets and Clamping Devices 144

11.1 Strength of Covers 144

11.3 Means for Securing Weathertightness 145

13 Hatchways Closed by Portable Covers in Lower Decks or within Fully Enclosed Superstructures 147

13.1 General 147

13.3 Portable Beams and Wood Covers 147

13.5 Steel Covers 147

13.7 Wheel Loading 148

14 Small Hatches on the Exposed Fore Deck 148

14.1 Application 148

14.3 Strength 148

14.5 Primary Securing Devices 148

14.7 Requirements for Primary Securing 148

14.9 Secondary Devices 149

15 Hatchways within Open Superstructures 151

17 Hatchways within Deckhouses 151

19 Container Loading 152

21 Machinery Casings 152

21.1 Arrangement 152

21.3 Exposed Casings on Freeboard or Raised Quarter Decks 152

21.5 Exposed Casings on Superstructure Decks 153

21.7 Casings within Open Superstructures 153

21.9 Casings within Enclosed Superstructures, Deckhouses, or below Freeboard Decks 153

23 Miscellaneous Openings in Freeboard and Superstructure Decks 154
23.1 Manholes and Scuttles 154
23.3 Other Openings 154
23.5 Escape Openings 154
23.7 Chain Pipe Opening 154

TABLE 1 Coaming and Sill Heights.....141
TABLE 2 Scantlings for Small Steel Hatch Covers on the Fore Deck.....149

FIGURE 1 Arrangement of Stiffeners 150
FIGURE 2 Example of Primary Securing Method 151

SECTION 13 Protection of Shell Openings..... 157
1 Cargo, Gangway, or Fueling Ports 157
1.1 Construction 157
1.3 Location.....157
3 Bow Doors, Inner Doors, Side Shell Doors and Stern Doors.....158
3.1 General.....158
3.3 Arrangement.....158
5 Securing, Locking and Supporting of Doors 158
5.1 Definitions.....158
7 Securing and Supporting Devices 159
7.1 Bow Doors.....159
7.3 Side Shell and Stern Doors 159
9 Securing and Locking Arrangement 159
9.1 General.....159
9.3 Operation.....159
9.5 Indication/Monitoring 160
11 Watertightness 161
11.1 Bow Doors.....161
11.3 Inner Doors.....161
11.5 Side Shell and Stern Doors 161
13 Bow Door Scantlings.....162
13.1 General.....162
13.3 Primary Structure.....162
13.5 Secondary Stiffeners 162
13.7 Plating 162
13.9 Securing and Supporting Devices 162
13.11 Visor Door Lifting Arms and Supports 163
15 Inner Door Scantlings 163
15.1 General.....163
15.3 Primary Structure.....163
15.5 Securing and Supporting Devices 163

17 Side Shell Door and Stern Door Scantlings 164
17.1 General 164
17.3 Primary Structure 164
17.5 Secondary Stiffeners 164
17.7 Plating 164
17.9 Securing and Supporting Devices 164
19 Bow Door Design Loads 165
19.1 External Pressure 165
19.3 External Forces 166
19.5 Visor Door Forces, Moments and Load Cases 167
19.7 Side-Opening Door Load Cases 169
21 Inner Door Design Loads 169
21.1 External Pressure 169
21.3 Internal Pressure 169
23 Side Shell and Stern Doors 169
23.1 Design Forces for Primary Members 169
23.3 Design Forces for Securing or Supporting Devices of Doors Opening Inwards 169
23.5 Design Forces for Securing or Supporting Devices of Doors Opening Outwards 170
25 Allowable Stresses 171
25.1 Primary Structure and Securing and Supporting Devices 171
25.3 Steel Securing and Supporting Devices Bearing Stress 171
25.5 Tensile Stress on Threaded Bolts 171
27 Operating and Maintenance Manual 171
27.1 Manual 171
27.3 Operating Procedures 171

FIGURE 1 Entry and Flare Angles 165
FIGURE 2 Definition of α_m and β_m 167
FIGURE 3 Visor Type Bow Door 168

SECTION 14 Bulwarks, Rails, Freeing Ports, Portlights, Windows, Ventilators, Tank Vents, and Overflows 173
1 Bulwarks and Guard Rails 173
1.1 Height 173
1.3 Strength of Bulwarks 173
1.5 Guard Rails 173
3 Access and Crew Protection 175
3.1 General 175
3.3 Access to Bow on Tankers 175
5 Freeing Ports 178
5.1 Basic Area 178
5.3 Trunks, Deckhouses, and Hatchway Coamings 178
5.5 Superstructure Decks 178

5.7 Open Superstructures 178
5.9 Details of Freeing Ports 179
7 Portlights 179
7.1 Application 179
7.3 Location 179
7.5 Construction 179
9 Windows 180
9.1 Construction 180
9.3 Testing 181
11 Ventilators, Tank Vents, and Overflows 181
11.1 General 181
11.3 Ventilators 181
11.5 Tank Vents and Overflows 182
11.7 Ventilators, Tank Vents and Overflows on the Fore Deck 182

TABLE 1 Acceptable Arrangement for Access 176
TABLE 2 181
TABLE 3 181
TABLE 4 760 mm (30 in.) High Tank Vents and Overflows Thickness and Bracket Standards 184
TABLE 5 900 mm (35.4 in.) High Ventilator Thickness and Bracket Standards 184

FIGURE 1 Guardrail Stanchion 174

SECTION 15 Ceiling, Sparring. and Protection of Steel 185
1 Ceiling 185
3 Sparring 185
5 Protection of Steel Work 186
5.1 All Spaces 186
5.3 Salt Water Ballast Space 186
5.5 Oil Spaces 186
5.7 Cargo Holds on Bulk Carriers (including Combination Carriers) 186

FIGURE 1 Extent of Coatings 187

SECTION 16 Weld Design 189
1 Fillet Welds 189
1.1 General 189
1.3 Tee Connections 189
1.5 Tee Type End Connections 190
1.7 Tee Joints at Boundary Connections 190
1.9 Ends of Unbracketed Stiffeners 190
1.11 Reduced Weld Size 190

1.13 Lapped Joints 191
1.15 Plug Welds or Slot Welds 191
3 Full or Partial Penetration Corner or Tee Joints 191
5 Alternatives 191

TABLE 1 Weld Sizes and Spacing – Millimeters 192
TABLE 1 Weld Sizes and Spacing – Inches 195

APPENDIX 1 Loading Manuals and Loading Instruments 35
1 General 35
1.1 Application 35
3 Definitions 35
3.1 Loading Guidance 35
3.3 Category I Vessels 36
3.5 Category II Vessels 36
5 Required Loading Guidance 36
5.1 Loading Manual 36
5.3 Modifications 36
7 Loading Manual 37
7.1 Required Information 37
7.3 Loading Conditions 37
7.5 Language 37
9 Loading Instrument 37
9.1 Type 37
9.3 Required Verifications 37
9.5 Language 38
11 Annual Surveys 38

TABLE 1 Loading Conditions in the Loading Manual 39

APPENDIX 2 Guidelines for Calculating Bending Moment and Shear Force in Rudders and Rudder Stocks 133
1 Application 133
3 Spade Rudders 133
3.1 Rudder 133
3.3 Lower Stock 134
3.5 Moment at Top of Upper Stock Taper 134
3.7 Bearing Reaction Forces 135
5 Rudders Supported by Shoepiece 135
5.1 Shear Force, Bending Moment and Reaction Forces 135
7 Rudders Supported by a Horn with One Pintle 137
7.1 Shear Force, Bending Moment and Reaction Forces 137

FIGURE 1 Spade Rudder 135
FIGURE 2 Rudder Supported by Shoepiece 136
FIGURE 3 Rudder Supported by a Horn with One Pintle 138

APPENDIX 3 Portable Beams and Hatch Cover Stiffeners of Variable Cross Section 155
1 Application 155

FIGURE 1 SM and I of Construction Elements 156

PART

3

CHAPTER **2 Hull Structures and Arrangements**

SECTION **1 Longitudinal Strength**

1 General

Vessels are to have longitudinal hull girder section modulus in accordance with the requirements of this section. The equation in this section is, in general, valid for all vessels having breadths, *B*, which do not exceed two times their depths, *D*, as defined in Section 3-1-1. Vessels whose proportions exceed these limits will be subject to special consideration.

3 Longitudinal Hull Girder Strength

3.1 Minimum Section Modulus

The minimum required hull girder section modulus, *SM,* at amidships, is to be determined in accordance with the following equation:

$$SM = C_1 C_2 L^2 B\,(C_b + 0.7) \qquad \text{m-cm}^2\ (\text{ft-in}^2)$$

where

C_1	=	$30.67 - 0.98L$	$12 \le L < 18$ m
	=	$22.40 - 0.52L$	$18 \le L < 24$ m
	=	$15.20 - 0.22L$	$24 \le L < 35$ m
	=	$11.35 - 0.11L$	$35 \le L < 45$ m
	=	6.40	$45 \le L < 61$ m
	=	$0.0451L + 3.65$	$61 \le L < 90$ m
C_1	=	$30.67 - 0.299L$	$40 \le L < 59$ ft
	=	$22.40 - 0.158L$	$59 \le L < 79$ ft
	=	$15.20 - 0.067L$	$79 \le L < 115$ ft
	=	$11.35 - 0.033L$	$115 \le L < 150$ ft
	=	6.40	$150 \le L < 200$ ft
	=	$0.0137L + 3.65$	$200 \le L < 295$ ft

C_2 = 0.01 (0.01, 0.000144)

L = length of vessel, as defined in 3-1-1/3, in m (ft)

B = breadth of vessel, as defined in 3-1-1/5, in m (ft)

C_b = block coefficient at design draft, based on the length, L, measured on the design load waterline. C_b is not to be taken as less than 0.60.

3.3 Vessels 61 m (200 ft) in Length and Over

In addition to meeting the above criteria in 3-2-1/3.1, vessels of 61 m (200 ft) in length or greater are to comply with the following requirements.

3.3.1 Sign Convention of Bending Moment and Shear

The sign convention bending moment and shear force is as shown in 3-2-1/Figure 1.

FIGURE 1
Sign Convention

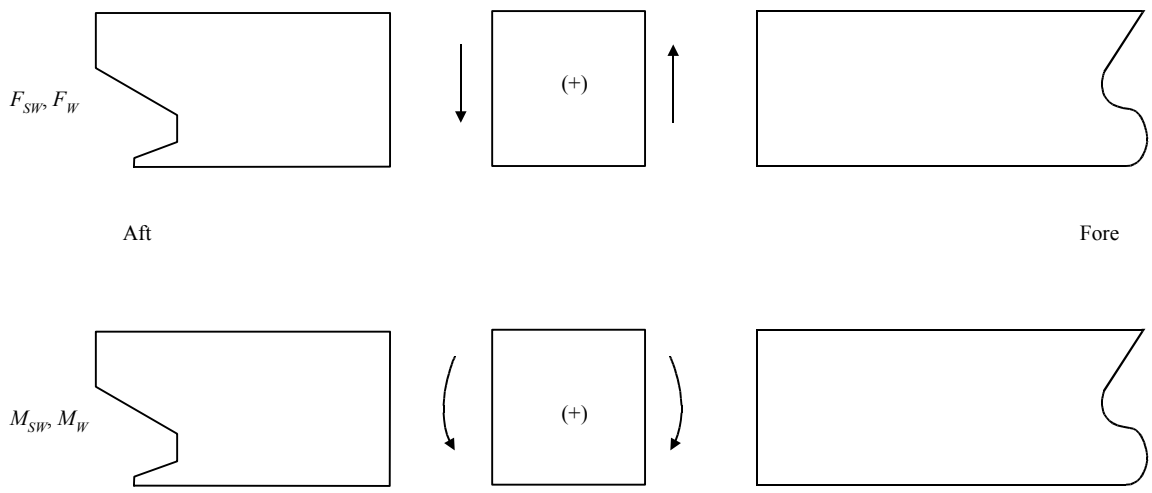

3.3.2 Still-water Bending Moment and Shear Force

Still-water bending moment and shear force calculations showing hull girder shear force and bending moment values along the entire vessel length for the anticipated loaded, transitional and ballasted conditions are to be submitted together with the distribution of lightship weights.

3.3.3 Wave Loads

3.3.3(a) Wave Bending Moment Amidships. The wave bending moment, expressed in kN-m (tf-m, Ltf-ft), may be obtained from the following equations:

$M_{ws} = -k_1 C_1 L^2 B(C_b + 0.7) \times 10^{-3}$ Sagging Moment

$M_{wh} = +k_2 C_1 L^2 B C_b \times 10^{-3}$ Hogging Moment

where

k_1 = 110 (11.22, 1.026)

k_2 = 190 (19.37, 1.772)

C_1 = $0.044L + 3.75$ SI/MKS units ($0.0134L + 3.75$ US customary units)

L = length of vessel, as defined in 3-1-1/3, in m (ft)

B = breadth of vessel, as defined in 3-1-1/5, in m (ft)

C_b = block coefficient at summer load waterline, based on L, as defined in 3-1-1/3

3.3.3(b) Envelope Curve of Wave Bending Moment. The wave bending moment along the length of the vessel L may be obtained by multiplying the midship value by the distribution factor M given in 3-2-1/Figure 2.

3.3.3(c) Wave Shear Force. The envelopes of maximum shearing forces induced by waves, F_w, as shown in 3-2-1/Figure 3 and 3-2-1/Figure 4, may be obtained from the following equations:

$F_{wp} = +kF_1C_1LB(C_b + 0.7) \times 10^{-2}$ For positive shear force

$F_{wn} = -kF_2C_1LB(C_b + 0.7) \times 10^{-2}$ For negative shear force

where

F_{wp}, F_{wn} = maximum shearing force induced by wave, in kN (tf, Ltf)

C_1 = as defined in 3-2-1/3.3.3(a)

L = length of vessel, as defined in 3-1-1/3, in m (ft)

B = breadth of vessel, as defined in 3-1-1/5, in m (ft)

C_b = block coefficient at summer load waterline, based on L, as defined in 3-1-1/3

k = 30 (3.059, 0.2797)

F_1 = distribution factor, as shown in 3-2-1/Figure 3

F_2 = distribution factor, as shown in 3-2-1/Figure 4

FIGURE 2
Distribution Factor *M*

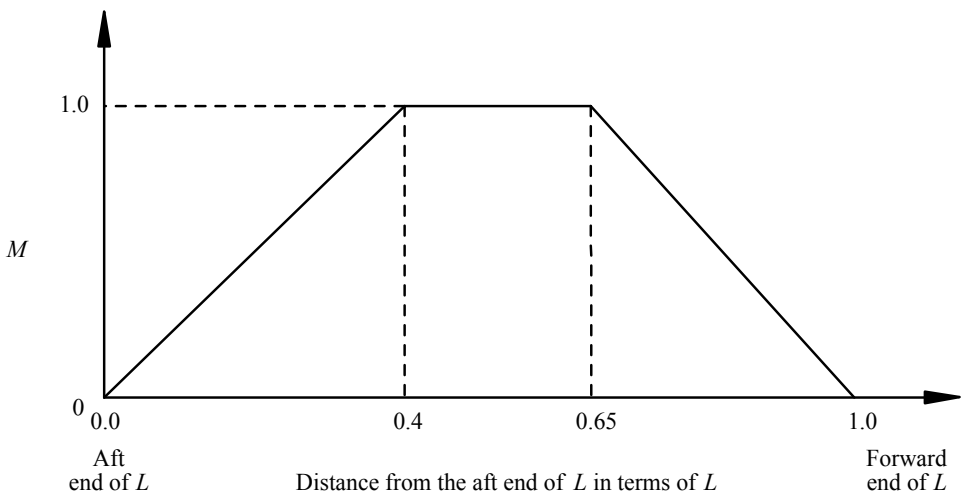

FIGURE 3
Distribution Factor F_1

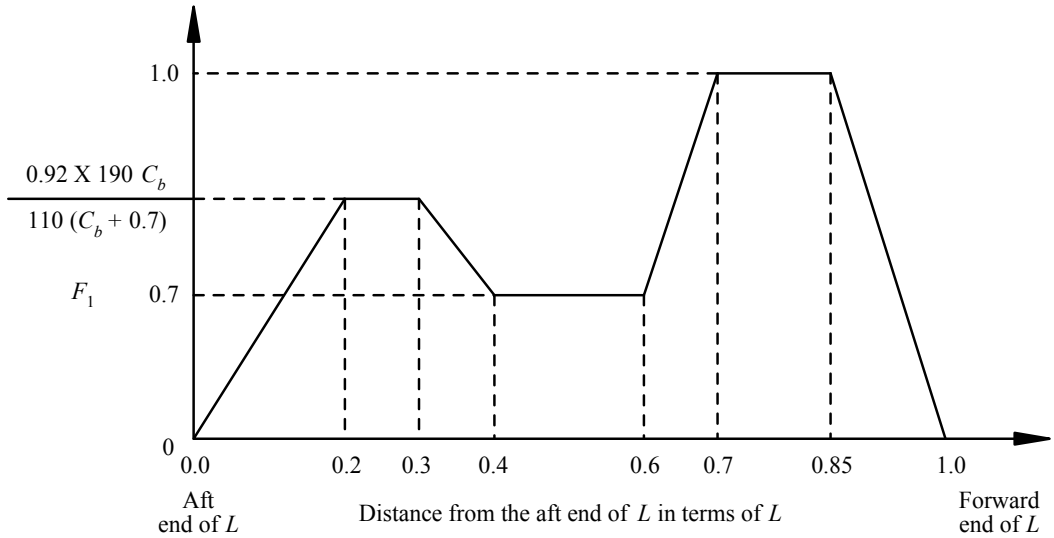

FIGURE 4
Distribution Factor F_2

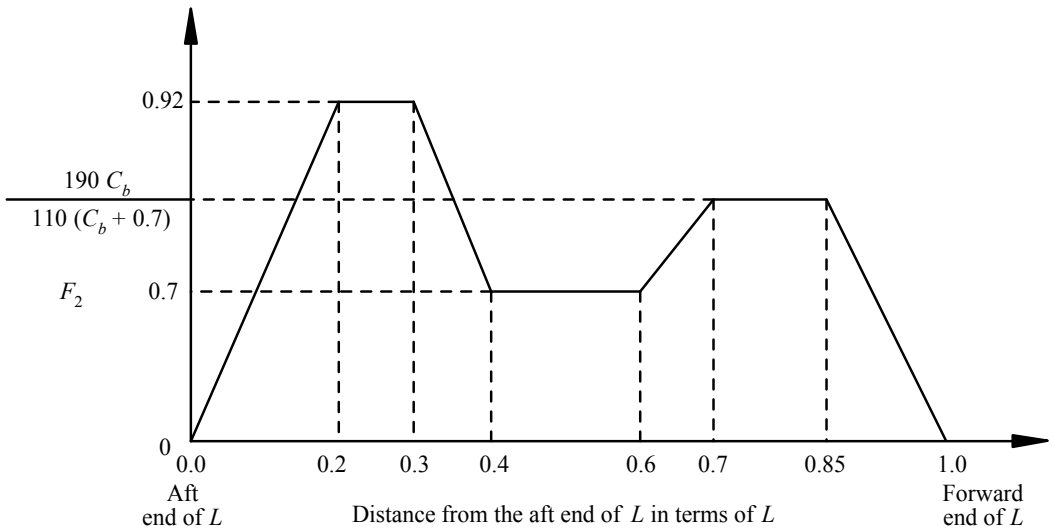

3.3.4 Section Modulus

The required hull girder section modulus for 0.4L amidships is to be obtained from the following equation, or 3-2-1/3.1, whichever is greater.

$$SM = M_t/f_p \qquad \text{m-cm}^2 \text{ (ft-in}^2\text{)}$$

where

M_t = total bending moment to be obtained as the maximum algebraic sum (see sign convention in 3-2-1/3.3.1) of still-water bending moment and wave-induced bending moment, as follows.

M_t = $M_{sw} + M_w$

M_{sw} = still water bending moment, in accordance with 3-2-1/3.3.2

M_w = maximum wave-induced bending moment, in accordance with 3-2-1/3.3.3(a)

f_p = nominal permissible bending stress

= 17.5 kN/cm^2 (1.784 tf/cm^2, 11.33 Ltf/in^2)

3.3.5 Shearing Strength

In calculating the nominal total shear stresses due to still-water and wave-induced loads, the maximum algebraic sum of the shearing force in still-water, $F_{sw,}$ and that induced by wave, $F_{w,}$ at the station examined is to be used. The thicknesses of the side shell and longitudinal bulkhead, where fitted, are to be such that the nominal total shear stresses, as obtained from 3-2-1/3.3.5(a) or 3-2-1/3.3.5(c), are not greater than 11.0 kN/cm^2 (1.122 tf/cm^2, 7.122 Ltf/in^2). Where the side shell or longitudinal bulkhead is constructed of higher strength material, the permissible shear stresses may be increased by the factor, 1/Q.

3.3.5(a) Shearing Strength for Vessels without Effective Longitudinal Bulkheads. For vessels without continuous longitudinal bulkheads, the nominal total shear stress, $f_{s,}$ in the side shell plating may be obtained from the following equation:

$$f_s = (F_{sw} + F_w)m/2t_sI \quad \text{kN/cm}^2 \text{ (tf/cm}^2\text{, Ltf/in}^2\text{)}$$

where

I = moment of inertia of the hull girder section, in cm^4 (in^4), at the section under consideration

m = first moment, in cm^3 (in^3), about the neutral axis, of the area of the effective longitudinal material between the horizontal level at which the shear stress is being determined and the vertical extremity of effective longitudinal material, taken at the section under consideration.

t_s = thickness of the side shell plating, in cm (in.), at the position under consideration.

F_{sw} = hull girder shearing force in still-water, in kN (tf, Ltf)

F_w = F_{wp} or $F_{wn,}$ as specified by 3-2-1/3.3.3(c), depending upon loading

3.3.5(b) Modification of Hull Girder Shearing Force for Vessels Carrying Cargo in Alternate Holds or with Other Non-Uniform Loading. Where cargo is carried in alternate holds, the hull girder shearing force in still water, F_{sw}, to be used for calculating shear stresses in the side shell plating may be modified to account for the shear loads transmitted through the double bottom structure to the traverse bulkhead.

3.3.5(c) Shearing Strength for Vessels with Two or Three Longitudinal Bulkheads. For vessels having continuous longitudinal bulkheads, the total shear stresses in the side shell and longitudinal bulkhead plating are to be calculated by an acceptable method. In determining the still-water shear force, consideration is to be given to the effects of non-uniform athwartship distribution of loads. The method described in Appendix 3-2-A1 of the *Steel Vessel Rules* may be used as a guide in calculating the nominal total shear stress, $f_{s,}$ related to the shear flow in the side shell or longitudinal bulkhead plating. Alternative methods of calculation will also be considered. One acceptable method is shown in Appendix 5C-2-A1 of the *Steel Vessel Rules*.

3.5 Hull Girder Moment of Inertia

The hull-girder moment of inertia of the vessel amidships, I, is to be not less than obtained from the following equation:

$I = L(SM)/33.3$ m^2-cm^2 (ft^2-in^2)

where

L = length of vessel, as defined in 3-1-1/3, in m (ft)

SM = hull girder section modulus required for the vessel in 3-2-1/3.1 or 3-2-1/3.3.4

5 Decks

5.1 Strength Decks

The uppermost deck to which the side shell plating extends for any part of the length of the vessel is to be considered the strength deck for that portion of the length, except in way of comparatively short superstructures. In such a case, the deck on which the superstructures are located is to be considered the strength deck in way of the superstructure. In general, the effective sectional area of the deck for use in calculating the section modulus is to exclude hatchways and other large openings through the deck but may include seam overlaps.

The deck sectional areas used in the section modulus calculations are to be maintained throughout the midship 0.4L in vessels. They may be reduced to one-half the normal requirement at 0.15L from the ends. In way of a superstructure beyond the midship 0.4L, the strength deck area may be reduced to approximately 70% of the normal requirement at that location.

5.3 Effective Lower Decks

To be considered effective for use in calculating the hull girder section modulus, the thickness of the deck plating is to comply with the requirements of Section 3-2-3. The sectional areas of lower decks used in calculating the section modulus are to be obtained as described in 3-2-1/5.1. These areas are to be maintained throughout the midship 0.4L and may be gradually reduced to one-half their midship value at 0.15L from the ends.

7 Longitudinal Strength with Higher-Strength Materials

7.1 General

Vessels in which the effective longitudinal material of either the upper or lower flanges of the main hull girder, or both, are constructed of materials having mechanical properties greater than those of ordinary strength hull structural steel [see Section 2-1-2 of the ABS *Rules for Materials and Welding (Part 2)*], are to have longitudinal strength generally in accordance with the preceding paragraphs of this section, but the value of the hull girder section modulus may be modified as permitted by the following paragraphs. Applications of higher-strength material are to be continuous over the length of the vessel to locations where the stress levels will be suitable for the adjacent mild steel structure. Higher strength steel is to be extended to suitable locations below the strength deck and above the bottom, so that the stress levels will be satisfactory for the remaining ordinary strength steel structure. The strength deck and bottom structure are to be longitudinally framed. The longitudinal framing members are to be essentially of the same material as the plating they support and are to be continuous throughout the required extent of higher strength steel. Calculations showing that adequate strength has been provided against buckling are to be submitted for review and care is to be exercised against the adoption of reduced thicknesses of materials which may be subject to damage during normal operations.

7.3 Hull Girder Moment of Inertia

The hull-girder moment of inertia is to be not less than required by 3-2-1/3.5.

7.5 Hull Girder Section Modulus

When either the top or the bottom flange of the hull girder, or both, is constructed of higher-strength material, the section modulus, as obtained from 3-2-1/3.1 or 3-2-1/3.3.4, may be reduced by the factor Q.

$$SM_{hts} = Q(SM)$$

where

Q = 0.78 for Grade H32

Q = 0.72 for Grade H36

H32, H36 are as specified in Section 2-1-3 of the ABS *Rules for Materials and Welding (Part 2)*.

Q factor for steels having other yield point or yield strength will be specially considered.

9 Loading Guidance *(1 July 1998)*

9.1 Loading Manual and Loading Instrument *(2009)*

All vessels that are contracted for construction on or after July 1998 are to be provided with a loading manual. Loading instruments are not required by these Rules. However, when fitted, a loading instrument is to be in accordance with Appendix 3-2-A1.**9.3 Allowable Stresses**

9.3.1 At Sea

See 3-2-1/3.3.4 for bending stress and 3-2-1/3.3.5 for shear stress for vessels with ordinary strength steel material. For higher strength steel, the allowable stress may be increased by a factor of $1/Q$ where Q is as defined in 3-2-1/7.5.

9.3.2 In Port

The allowable in-port stress is 13.13 kN/cm^2 (1.34 tf/cm^2, 8.5 Ltf/in^2) for bending and 10 kN/cm^2 (1.025 tf/cm^2, 6.5 Ltf/in^2) for shear. For higher strength steel, the allowable stress may be increased by a factor of $1/Q$ where Q is as defined in 3-2-1/7.5.

11 Section Modulus Calculation

11.1 Items Included in the Calculation

In general, the following items may be included in the calculation of the section modulus, provided they are continuous or effectively developed within midship, 0.4L, and gradually tapered beyond the midship, 0.4L. Where the scantlings are based on the still-water bending moment envelope curves, items included in the hull girder section modulus amidships are to be extended as necessary to meet the hull girder section modulus required at the location being considered.

- Deck plating (strength deck and other effective decks)
- Shell and inner bottom plating
- Deck and bottom girders
- Plating and longitudinal stiffeners of longitudinal bulkheads
- All longitudinals of deck, sides, bottom and inner bottom

- Continuous longitudinal hatch coamings. See 3-2-1/13.

11.3 Effective Areas Included in the Calculation

In general, the net sectional areas of longitudinal strength members are to be used in the hull girder section modulus calculations, except that small isolated openings need not be deducted, provided the openings and the shadow area breadths of the other openings in any one transverse section do not reduce the section modulus by more than 3%. The breadth or depth of such openings is not to be greater than 1200 mm (47 in.) or 25% of the breadth or depth of the member in which it is located, whichever is less, with a maximum of 75 mm (3 in.) for scallops. The length of small isolated openings not required to be deducted is generally not to be greater than 2500 mm (100 in.) The shadow area of an opening is the area forward and aft of the opening enclosed by the lines tangential to the corners of the opening intersecting each other to form an included angle of 30 degrees.

11.5 Section Modulus to the Deck or Bottom

The section modulus to the deck or bottom is obtained by dividing the moment of inertia by the distance from the neutral axis to the molded deck at side amidships or baseline, respectively.

11.7 Section Modulus to the Top of Hatch Coamings

For continuous longitudinal hatch coamings, in accordance with 3-2-1/13, the section modulus to the top of the coaming is to be obtained by dividing the moment of inertia by the distance from the neutral axis to the deck at side plus the coaming height. This distance need not exceed y_t, as given by the following equation, provided y_t is not less than the distance to the molded deck line at side.

$$y_t = y\,(0.9 + 0.2x/B) \qquad \text{m (ft)}$$

where

y = distance, in m (ft), from the neutral axis to the top of the continuous coaming

x = distance, in m (ft), from the top of the continuous coaming to the centerline of the vessel

B = breadth of the vessel, as defined in 3-1-1/5, in m (ft). x and y are to be measured to the point giving the largest value of y_t.

Section modulus to the top of longitudinal hatch coamings between multi-hatchways will be subject to special consideration.

13 Continuous Longitudinal Hatch Coamings and Above-Deck Girders

Where strength deck longitudinal coamings of length greater than 0.14L are effectively supported by longitudinal bulkheads or deep girders, the coamings are to be longitudinally stiffened, in accordance with 3-2-12/7.7. The section modulus amidships to the top of the coaming is to be as required by 3-2-1/3.1, 3-2-1/3.3, and 3-2-1/11.7, but the section modulus to the deck at side, excluding the coaming, need not be determined in way of such coaming.

Continuous longitudinal girders on top of the strength deck are to be similarly considered. Their scantlings are also to be in accordance with Section 3-2-6.

PART

3

CHAPTER 2 Hull Structures and Arrangements

APPENDIX 1 Loading Manuals and Loading Instruments *(1 July 1998)*

Note: These requirements are intended to satisfy Regulation 10(1) of the International Convention on Load Lines, 1966.

1 General

1.1 Application

The requirements in Appendix 3-2-A1 apply to all classed vessels 65 m (213 ft) and above in length (L_f) that are contracted for construction on or after 1 July 1998.

3 Definitions

3.1 Loading Guidance

Loading guidance is a generic term covering both loading manual and loading instrument as defined below.

3.1.1 Loading Manual

A loading manual is a document with sufficient information to enable the master of the vessel to arrange for the loading and ballasting of the vessel in such a way as to avoid the creation of any unacceptable stresses in the vessel's structure.

3.1.2 Loading Instrument

A loading instrument is an instrument by means of which it can be easily and quickly ascertained that the still water bending moments, shear forces and, where applicable, the still water torsional moments and lateral loads at the specified points along the length of the vessel will not exceed the specified values in any loaded or ballast condition.

3.3 Category I Vessels

Category I vessels are any one of the following vessels.

3.3.1

Vessels with large deck openings where combined stresses due to vertical and horizontal hull girder bending and torsional and lateral loads need to be considered.

3.3.2

Vessels designed for non-homogeneous loading where the cargo and/or ballast may be unevenly distributed, except those belonging to 3-2-A1/3.5.3.

3.3.3

Chemical carriers and gas carriers.

3.5 Category II Vessels

Category II vessels are any one of the following vessels.

3.5.1

Vessels with such arrangement as will result in small possibilities for variation in the distribution of cargo and ballast.

3.5.2

Vessels on regular and fixed trading pattern where the loading manual gives sufficient guidance.

3.5.3

Vessels of which the design takes into account the uneven distribution of cargo or ballast.

5 Required Loading Guidance *(2003)*

5.1 Loading Manual

All vessels are to be provided with a loading manual reviewed and stamped by ABS, in accordance with 3-2-A1/7, with the exception that a loading manual is not required for Category II vessels where the deadweight does not exceed 30% of the displacement at the summer load line.

5.3 Modifications

Where the modifications to the vessel or to the loading/trading pattern result in changes to the input information, a revised or new loading manual is to be submitted and a stamped copy to be placed aboard to replace the existing manual. The loading instrument is to be re-verified in accordance with 3-2-A1/9.3 or newly installed and verified in such cases.

Where the changes due to modification of the vessel are such that the still water bending moments and shear forces corresponding to the new loading conditions are within ±2% of the existing allowable values, the existing allowable values need not be modified.

7 Loading Manual

7.1 Required Information

The loading manual is to be based on the final data of the vessel and is to include at least the following information:

i) The loading conditions based on which the design of the vessel is approved.

ii) The results of the calculations of still water bending moments, shear forces.

iii) Permissible limits of still water bending moment and shear force and, where applicable, limitations due to torsional and lateral loads.

iv) Maximum allowable tank top loading.

v) If cargoes other than bulk cargoes are contemplated, such cargoes are to be listed together with any specific instructions for loading.

vi) Maximum allowable load on deck and hatch covers. If the vessel is not approved to carry load on deck or hatch covers, that fact is to be clearly stated in the loading manual.

7.3 Loading Conditions

The above information is to be based on the intended service conditions. See 3-2-A1/Table 1 for the selection of loading conditions.

7.5 Language

The loading manual is to be prepared in, or include, a language understood by the user. English may be considered as a language understood by the user.

9 Loading Instrument

9.1 Type

A loading instrument is to be digital. Single point loading instrument is not acceptable.

9.3 Required Verifications

Before a loading instrument is accepted for the vessel, all relevant aspects of the instrument, including but not limited to the following, are to be demonstrated to the Surveyor for the Surveyor's personal verification:

i) That the instrument is type approved, where applicable

ii) That the instrument is based on the final data of the vessel

iii) That the number and position of read-out points are satisfactory

iv) That the relevant limits for all read-out points are satisfactory

v) That the operation of the instrument after installation onboard, in accordance with the approved test conditions has been satisfactory

vi) That approved test conditions are available onboard

vii) That an operational manual, which does not require approval, is available onboard for the instrument

9.5 Language

The operation manual and the instrument output are to be prepared in, or include, a language understood by the user. English may be considered to be a language understood by the user.

11 Annual Surveys

The requirements in 7-3-2/1.1.5 of the *Rules for Survey After Construction (Part 7)* are to be complied with as follows: At each Annual Survey, loading manual is to be verified onboard and, where applicable, loading instrument is to be verified in working order. The operation manual for loading instrument is also to be verified onboard.

TABLE 1
Loading Conditions in the Loading Manual

1.	The loading manual is to include at least	
1.1	full load conditions, subdivided into departure and arrival conditions,	
1.2	ballast conditions, subdivided into departure and arrival conditions (see also 1.5)	
1.3	critical loading conditions on which the design of the vessel is based.	
1.4	in-port conditions (see also 1.5.3)	
1.5	Intermediate conditions, including but not limited to	
	1.5.1	before and after any ballasting/deballasting during the voyage.
	1.5.2	ballast exchange and its sequence, where intended,
	1.5.3	during loading/unloading (for vessels in 2.1, 2.2 and, where applicable, 2.5)
2.	The following conditions are to be considered for the particular type of vessel. The list does not preclude any loading conditions that are necessary for the particular service intended:	
2.1	Oil Carriers:	
	2.1.1	homogeneous cargo if consistent with the service of the vessel
	2.1.2	cargoes of typical densities within the expected range
	2.1.3	part loaded conditions
	2.1.4	short voyages (e.g., half bunker)
	2.1.5	tank cleaning conditions
	2.1.6	docking conditions afloat
2.2	Bulk Carriers, Ore Carriers, Container Carriers, Dry Cargo Vessels, Other Specialized Carriers:	
	2.2.1	homogeneous cargo if consistent with the service of the vessel
	2.2.2	cargoes of typical densities within the expected range
	2.2.3	heavy cargo with empty holds or non-homogeneous conditions
	2.2.4	short voyages (e.g., half bunker)
	2.2.5	deck cargoes
	2.2.6	docking conditions afloat
2.3	Liquefied Gas Carriers:	
	2.3.1	homogeneous loading for all approved cargoes
	2.3.2	with empty or partially filled tank(s)
	2.3.3	docking conditions afloat
2.4	Chemical Carriers:	
	2.4.1	conditions for oil carriers
	2.4.2	all approved high density cargoes
2.5	Combination Carriers	
	2.5.1	conditions as specified in 2.1 and 2.2 above.

This Page Intentionally Left Blank

PART

3

CHAPTER **2 Hull Structures and Arrangements**

SECTION **2 Shell Plating**

1 General

Shell plating is to be of not less thickness than is required by the equations for thickness of side and bottom plating as required by this section, nor less than required by Section 3-2-1 for longitudinal strength and Section 3-2-8 for deep tank plating with h not less than the vertical distance to the freeboard deck at side.

3 Bottom Shell Plating

3.1 Extent of Bottom Plating

The term "bottom plating" refers to the plating from the keel to the upper turn of the bilge or upper chine.

3.3 Bottom Shell Plating

The thickness of the bottom shell plating throughout is not to be less than that obtained from the following equations:

3.3.1

$$t = \frac{s\sqrt{h}}{254} + 2.5 \text{ mm}$$

$$t = \frac{s\sqrt{h}}{460} + 0.10 \text{ in.}$$

where

t	=	thickness of bottom shell plating, in mm (in.)
s	=	frame spacing, in mm (in.)
h	=	depth, D, in m (ft), as defined in 3-1-1/7.1, but not less than $0.1L$ or $1.18d$, whichever is greater
d	=	draft for scantlings, as defined in 3-1-1/9, or $0.066L$, whichever is greater
L	=	length of vessel, in m (ft), as defined in 3-1-1/3

3.3.2

$$t = \frac{s}{R}\sqrt{\frac{SM_R}{SM_A}} \cdot \frac{1}{\sqrt{Q}} \quad \text{mm (in.)}$$

where

t and s are as defined above.

R	=	45 with transverse framing
	=	55 with longitudinal framing
SM_R	=	hull girder section modulus required by 3-2-1/3, in cm^2-m (in^2-ft)
SM_A	=	bottom hull girder section modulus, in cm^2-m (in^2-ft)
Q	=	as defined in 3-2-1/7.5

3.5 Bottom Forward

For vessels of 61 m (200 ft) in length and above, where the heavy weather ballast draft or operating draft forward is less than 0.04L, the plating on the flat of bottom forward, forward of the location given in 3-2-4/Table 1 is to be not less than required by the following equation:

$$t = 0.0046s\sqrt{(0.005L^2 - 1.3d_f^2)/d_f} \quad \text{mm}$$

$$t = 0.0026s\sqrt{(0.005L^2 - 1.3d_f^2)/d_f} \quad \text{in.}$$

where

s	=	frame spacing, in mm (in.)
L	=	length of vessel, as defined in 3-1-1/3
d_f	=	heavy weather ballast draft at the forward perpendicular, in m (ft)

5 Side Shell Plating

5.1 General *(1998)*

The side shell plating is not to be less in thickness than that obtained from the following equation:

$$t = \frac{s\sqrt{h}}{268} + 2.5 \quad \text{mm}$$

$$t = \frac{s\sqrt{h}}{485} + 0.10 \quad \text{in.}$$

where

t	=	thickness, in mm (in.)
s	=	spacing of transverse frames or longitudinals, in mm (in.)
h	=	depth, in m (ft), as defined in 3-1-1/7, but not less than 0.1L or 1.18d, whichever is greater
d	=	draft for scantlings, as defined in 3-1-1/9, or 0.066L, whichever is greater
L	=	length of the vessel, as defined in 3-1-1/3

t is not to be taken less than 8.5 mm (0.33 in.) for offshore support vessels.

The side shell plating in way of hold frames of dry cargo vessels with typical bulk carrier configuration (sloping upper and lower wing tanks with a transversely framed side shell in way of the hold) is also not to be less than that obtained from the following equation:

$$t = \sqrt{L} \quad \text{mm}$$

$$t = 0.0218\sqrt{L} \quad \text{in.}$$

with L as defined above.

5.3 Recommendation for Vessels Subject to Impact

For vessels subject to impact loadings during routine operations, it is recommended that a side shell 25% greater in thickness than that obtained from the equation in 3-2-2/5.1 be provided.

5.5 Side Shell Plating at Ends

The minimum side shell plating thickness, t, at ends is to be obtained from the following equations and is not to extend for more than $0.1L$ from the ends. Between the midship $0.4L$ and the end $0.1L$, the thickness of the plating may be gradually tapered.

$$t = 0.0455L + 0.009s \quad \text{mm}$$

$$t = 0.000545L + 0.009s \quad \text{in.}$$

where

s = frame spacing, in mm (in.)

L = length of vessel, as defined in 3-1-1/3, in m (ft)

Where the strength deck at the ends is above the freeboard deck, the thickness of the side plating above the freeboard deck may be reduced to the thickness given for forecastle and poop sides at the forward and after ends, respectively.

5.7 Forecastle and Poop Side Plating

5.7.1 Forecastle Side Plating

The thickness, t, of the plating is to be not less than that obtained from the following equation:

$$t = 0.038(L + 30.8) + 0.006s \quad \text{mm}$$

$$t = 0.00045(L + 103.3) + 0.006s \quad \text{in.}$$

5.7.2 Poop Side Plating

The thickness, t, of the plating is to be not less than that obtained from the following equation:

$$t = 0.0296(L + 39.5) + 0.006s \quad \text{mm}$$

$$t = 0.00035(L + 132.9) + 0.006s \quad \text{in.}$$

where

s = spacing of frames, in mm (in.)

L = length of vessel, as defined in 3-1-1/3, in m (ft)

7 Bow and Stern Thruster Tunnels

The thickness of the tunnel plating is to be not less than that required by 3-2-2/5.5, nor is the thickness to be less than that obtained from the following equation:

$t = 0.008d + 3.3$ mm

$t = 0.008d + 0.13$ in.

where

d = inside diameter of the tunnel, in mm (in.), but is to be taken as not less than 968 mm (38 in.)

Where the outboard ends of the tunnel are provided with bars or grids, the bars or grids are to be effectively secured.

9 Local Strengthening for Research Vessels

In vessels used for research, wear plates or rollers are recommended at all places where research methods or gear will subject the shell plating to accelerated wear. Special strengthening may be required in areas where small boats are regularly launched, retrieved or stowed. Special strengthening may also be required in areas where the vessel makes contact with another vessel when pursing, hauling, brailing, pumping, loading, unloading or running together.

11 Compensation

Compensation is to be provided for openings in the shell plating where required to maintain the longitudinal and transverse strength of the hull. All openings are to have well-rounded corners. Those in the upper side shell are to be located a suitable distance below the deck edge. Cargo and gangway openings are to be kept well clear of other discontinuities in the hull girder. Local provision is to be made to maintain the longitudinal and transverse strength of the hull.

Thick plating or doublers of sufficient breadth to prevent damage from the flukes of stockless anchors are to be fitted around the hawse pipes.

13 Breaks

Breaks in vessels having partial superstructures are to be specially strengthened to limit the local increases in stresses at these points. The stringer plates and sheer strakes at the lower level are to be increased in thickness well beyond the break in both directions. The thickness is to be increased 25% in way of breaks of superstructures. The side plating of the superstructure is to be increased in thickness and the side plating is to extend well beyond the end of the superstructure in such fashion as to provide a long gradual taper. Where the breaks of the forecastle or poop are appreciably beyond the midship $0.5L$, these requirements may be modified. Gangways, large freeing ports, side shell doors, and other openings in the shell or bulwarks are to be kept well clear of the breaks, and any holes which must unavoidably be cut in the plating are to be kept as small as possible and are to be circular or oval in form.

15 Bilge Keels

Bilge keels, where fitted, are to be attached to the shell by a doubler. In general, both the bilge keel and the doubler are to be continuous. The connection of the bilge keel to the doubler, and the doubler to the shell, are to be by double continuous fillet welds.

Butt welds in the bilge keel and doubler are to be full penetration and are to be kept clear of master erection butts. In general, shell butts are to be flush in way of the doubler. Doubler butts are to be flush in way of the bilge keel. In general, scallops and cutouts are not to be used. Where desired, a crack-arresting hole at least 25 mm (1 in.) in diameter may be drilled in the bilge keel butt weld as close as practicable to the doubler.

The ends of the bilge keel are to be suitably tapered and are to terminate on an internal stiffening member. The material tensile properties of bilge keels and doublers are to be as required for bottom shell plating.

17 Higher-strength Materials

17.1 General

In general, applications of higher-strength materials are to take into consideration the suitable extension of the higher-strength material above and below the bottom and deck, respectively, as required by 3-2-1/7.1. Care is to be taken against the adoption of reduced thickness of material that might be subject to damage during normal operation. The thickness of bottom and side-shell plating, where constructed of higher-strength materials, are to be not less than required for purposes of longitudinal hull girder strength; nor are they to be less than required by the foregoing paragraphs of this section when modified as indicated by the following paragraphs.

17.3 Bottom Plating of Higher-strength Material

Bottom shell plating, where constructed of higher-strength material and where longitudinally framed, is to be not less in thickness than that obtained from the following equation:

$$t_{hts} = (t_{ms} - C)\sqrt{Q} + C$$

where

t_{hts} = thickness of higher-strength material, in mm (in.)

t_{ms} = thickness, in mm (in.), of ordinary-strength steel, as required by preceding paragraphs of this section, or from the requirements of other sections of the Rules, appropriate to the vessel type.

C = 4.3 mm (0.17 in.)

Q = as defined in 3-2-1/7.5

17.5 Side Plating of Higher-strength Material

Side-shell plating, where constructed of higher-strength material, is to be not less in thickness than that obtained from the following equation:

$$t_{hts} = [t_{ms} - C][(Q + 2\sqrt{Q})/3] + C$$

where t_{hts}, t_{ms}, C and Q are as defined in 3-2-2/17.3 for bottom plating.

17.7 End Plating

End-plating thickness, including plating on the flat of bottom forward, where constructed of higher-strength materials, will be subject to special consideration.

This Page Intentionally Left Blank

PART

3

CHAPTER **2 Hull Structures and Arrangements**

SECTION **3 Deck Plating**

1 General

The thickness of the deck plating is not to be less than that required to obtain the hull-girder section modulus given in Section 3-2-1, nor less than required by this section.

3 Deck Plating

The thickness of plating on each deck is to be not less than the greater of those obtained from the following equations. The required thickness is not to be less than 5.0 mm (0.20 in.), except for platform decks in enclosed passenger spaces where the thickness is not to be less than 4.5 mm (0.18 in.). Thickness of strength deck inside line of openings may be reduced by 1.0 mm (0.04 in.) from t obtained by 3-2-3/3.3 below.

3.1 All Decks

$$t = \frac{s\sqrt{h}}{254} + 2.5 \text{ mm}$$

$$t = \frac{s\sqrt{h}}{460} + 0.10 \text{ in.}$$

where

t = thickness, in mm (in.)

s = beam or longitudinal spacing, in mm (in.)

h = height, in m (ft), as follows:

= *for a deck or portion of deck forming a tank top*, the greater of the following distances:

- two-thirds of the distance from the tank top to the top of the overflow, or
- two-thirds of the distance from the tank top to the bulkhead deck or freeboard deck.

= *for a lower deck on which cargo or stores are carried,* the tween-deck height at side; where the cargo weights are greater than normal [7010 N/m^3 (715 kgf/m^3, 45 lbf/ft^3)], h is to be suitably adjusted.

= *for an exposed deck on which cargo is carried,* 3.66 m (12 ft). Where it is intended to carry deck cargoes in excess of 25850 N/m^2 (2636 kgf/m^2, 540 lbf/ft^2), this head is to be increased in proportion to the added loads which will be imposed on the structure

Elsewhere, the value of h is to be not less than that obtained from the appropriate equation below, where L is the length of vessel in m (ft), as defined in 3-1-1/3.

3.1.1 Exposed Freeboard Deck Having No Deck Below

$h = 0.028L + 1.08$ m

$h = 0.028L + 3.57$ ft

3.1.2 Exposed Freeboard Deck Having a Deck Below, Forecastle Deck, Superstructure Deck Forward of Amidships 0.5L

$h = 0.028L + 0.66$ m

$h = 0.028L + 2.14$ ft

3.1.3 Freeboard Deck within Superstructure, Any Deck Below Freeboard Deck, Superstructure Deck Between 0.25L Forward of and 0.20L Aft of Amidships

$h = 0.014L + 0.87$ m

$h = 0.014L + 2.86$ ft

3.1.4 All Other Locations

$h = 0.014L + 0.43$ m

$h = 0.014L + 1.43$ ft

3.3 Strength Decks within the Midship 0.8L *(2002)*

For vessels of length equal to or greater than 61 meters, the strength deck plating within the midship 0.8L shall meet the following requirement:

$t = 0.009s + 2.4$ mm

$t = 0.009s + 0.095$ in.

where

s = beam or longitudinal spacing, in mm (in.)

3.5 All Strength Deck Plating Outside the Line of Openings and Other Effective Deck Plating *(2002)*

For vessels of length equal to or greater than 61 meters, the strength deck plating within the midship 0.8L shall meet the following requirement:

$$t = \frac{s}{R}\sqrt{\frac{SM_R}{SM_A}} \cdot \frac{1}{\sqrt{Q}} \text{ mm (in.)}$$

where

t = thickness, in mm (in.)

s = beam or longitudinal spacing, in mm (in.), not to be taken less than 610 mm (24 in.)

R = 60 for longitudinal framing, 45 for transverse framing

SM_R = hull girder section modulus required in 3-2-1/3, in cm^2-m (in^2-ft)

SM_A = hull girder section modulus, in cm^2-m (in^2-ft), measured to the deck in question

Q = material factor for the material used in determining SM_R, as defined in 3-2-1/7.5

5 Compensation

Compensation is to be provided for openings in the strength deck and other effective decks to maintain the longitudinal and transverse strength. Openings in the strength deck are to have a minimum corner radius of 0.125 times the width of the opening, but need not exceed a radius of 600 mm (24 in.). In other decks, the radius is to be 0.09375 times the width of the opening, but need not exceed radius of 450 mm (18 in.). Openings are to be a suitable distance from the deck edge, from cargo hatch covers, from superstructure breaks and from other areas of structural discontinuity.

7 Wheel Loading

Where provision is to be made for the operation or stowage of vehicles having rubber tires, and after all other requirements are met, the thickness of deck plating is to be not less than that obtained from the following equation:

$$t = kKn\sqrt{CW} \quad \text{mm (in.)}$$

where

k = 8.05 (25.2, 1)

K = as given in 3-2-3/Figure 1

n = 1.0 where $\ell/s > 2.0$ and 0.85 where $\ell/s = 1.0$. For intermediate values of ℓ/s, n is to be obtained by interpolation

C = 1.5 for wheel loads of vehicles stowed at sea and 1.1 for vehicles operating in port

W = static wheel load, in kN (tf, Ltf)

a = wheel imprint dimension, in mm (in.), parallel to the longer edge, ℓ, of the plate panel

b = wheel imprint dimension, in mm (in.), perpendicular to the longer edge, ℓ, of the plate panel

s = spacing of deck beams or deck longitudinals, in mm (in.)

ℓ = length of the plate panel, in mm (in.)

For wheel loading, the strength deck plating thickness is to be not less than 110% of that required by the above equation, and platform deck plating thickness is to be not less than 90% of that required by the above equation.

Where the wheels are close together, special consideration will be given to the use of the combined imprint and load. Where the intended operation is such that only the larger dimension of the wheel imprint is perpendicular to the longer edge of the plate panel, b above may be taken as the larger wheel imprint dimension, in which case, a is to be the lesser one.

FIGURE 1
Wheel Loading Curves of K

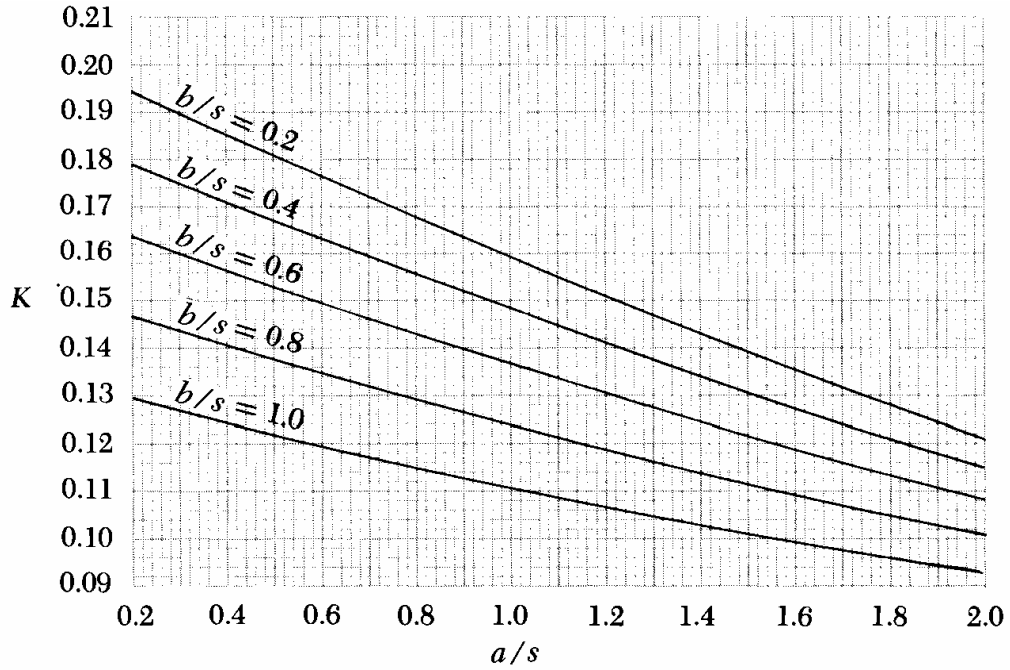

9 Higher-strength Material

9.1 Thickness

In general, applications of higher strength materials are to take into consideration the suitable extension of the higher strength material below the deck, forward and aft. Care is to be taken to avoid the adoption of reduced thickness of material such as might be subject to damage during normal operation. The thickness of deck plating for longitudinally framed decks, where constructed of higher-strength material, is to be not less than required for longitudinal strength, nor is it to be less than that obtained from the following equation:

$$t_{hts} = (t_{ms} - C)\sqrt{Q} + C$$

where

t_{hts} = thickness of higher-strength material, in mm (in.)

t_{ms} = thickness of ordinary-strength steel, in mm (in.), as required 3-2-3/3.1 and 3-2-3/3.3

C = 4.3 mm (0.17 in.)

Q = is as defined in 3-2-1/7.5

Where the deck plating is transversely framed, or where the Rules do not provide a specific thickness for the deck plating, the thickness of the higher-strength material will be specially considered, taking into consideration the size of the vessel, intended service and the foregoing Rule requirements.

9.3 Wheel Loading

Where deck or flats are constructed of higher strength material and provision is made for the operation or stowage of vehicles having rubber tires, the thickness of plating is to be not less than that obtained from the following equation:

$$t_{hts} = t_{ms}\sqrt{(M/Y)} \quad \text{mm (in.)}$$

where

t_{hts}	=	thickness of higher-strength material, in mm (in.)
t_{ms}	=	thickness of ordinary-strength steel, as obtained from 3-2-3/7
Y	=	as defined in 3-2-7/5.1
M	=	235 (24, 34000)

This Page Intentionally Left Blank

PART

3

CHAPTER **2 Hull Structures and Arrangements**

SECTION **4 Bottom Structure**

1 Double Bottoms

1.1 General

Inner bottoms are to be fitted fore and aft between the peaks or as near thereto as practicable in vessels of ordinary design of 500 GT or over. Where, for special reasons, it may be desired to omit the inner bottom, the arrangements are to be clearly indicated on the plans when first submitted for approval. A double bottom need not be fitted in way of deep tanks, provided the safety of the vessel in the event of bottom damage is not thereby impaired. It is recommended that the inner bottom be arranged to protect the bilges as much as possible and that it be extended to the sides of the vessel.

Shell longitudinals and frames in way of deep tanks are to have not less strength than is required for stiffeners on deep tank bulkheads.

1.3 Center Girder

A center girder is to be fitted extending as far forward and aft as practicable. The plates are to be continuous within the midship three-quarters length; elsewhere, they may be intercostal between floors. Where double bottoms are to be used for fuel oil or fresh water, the girders are to be intact, but need not be tested under pressure. This requirement may be modified in narrow tanks at the ends of the vessel or where other intact longitudinal divisions are provided at about 0.25B from centerline. Where the girders are not required to be intact, manholes may be cut in every frame space outside the midships three-quarters length; they may be cut in alternate frames spaces within the midships three-quarters length. For vessels which have a length more than 61 m (200 ft) and the length of the cargo hold is greater than 1.2B, the thickness and depth of center girder plates are to be specially considered based on the results of a direct structural calculation.

1.3.1 Thickness Amidships

The thickness of the center girder within the midship one-half length is not to be less than that obtained from the following equation.

$$t = 0.056L + 5.5 \text{ mm}$$

$$t = 0.00067L + 0.22 \text{ in.}$$

where

t = thickness, in mm (in.)

L = length of vessel, in m (ft), as defined 3-1-1/3

1.3.2 Thickness at Ends

The thickness of the center girder forward and aft of the midship one-half length may be reduced to 85% of the girder thickness amidships.

1.3.3 Depth

The depth of the center girder is not to be less than that obtained from the following equation:

$$h_g = 32B + 190\sqrt{d} \quad \text{mm}$$

$$h_g = 0.384B + 4.13\sqrt{d} \quad \text{in.}$$

where

h_g = depth, in mm (in.)

B = breadth of vessel, in m (ft), as defined in 3-1-1/5

d = draft for scantlings, in m (ft), as defined in 3-1-1/9

1.5 Side Girders

Where the distance between the center girder and the side shell exceeds 4.57 m (15 ft), intercostal side girders are to be fitted approximately midway between the center girder and the side shell. The minimum thickness of the intercostal side girders is not to be less than obtained from the following equation.

$$t = 0.036L + c \quad \text{mm}$$

$$t = 0.00043L + c \quad \text{in.}$$

where

t = thickness, in mm (in.)

L = length of vessel, in m (ft), as defined in 3-1-1/3

c = 4.7 mm (0.18 in.)

1.7 Floors

Solid floors are to be fitted at every frame under the engine room, at every frame in the peaks and under transverse bulkheads. Elsewhere, the solid floors are to have a maximum spacing of 3.66 m (12 ft) in association with intermediate open floors or longitudinal framing. The thickness of solid floors is to be equal to the thickness of side girders obtained in 3-2-4/1.5, except that for widely spaced floors in association with longitudinal framing, c is to be taken as 6.2 mm (0.24 in.).

1.9 Frames

In transversely framed vessels, open floors consisting of frames and reverse frames are to be fitted at all frames where solid floors are not fitted. Center and side brackets are to overlap the frames and reverse frames for a distance equal to $0.05B$. They are to be of the thickness required for side girders in the same location and are to be flanged on their outer edges. Alternatively, longitudinal framing is to be fitted in association with widely spaced floors. The section modulus, SM, of each frame, reverse frame or bottom, or inner bottom longitudinal in association with the plating to which it is attached is not to be less than that obtained from the following equation.

$$SM = 7.8chs\ell^2 \quad \text{cm}^3$$

$$SM = 0.0041chs\ell^2 \quad \text{in}^3$$

where

s = frame spacing, in m (ft)

ℓ = unsupported span between supporting members, in m (ft). Where brackets are fitted in accordance with 3-1-2/5.5 and are supported by bulkheads, inner bottom, or side shell, the length, ℓ, may be measured as permitted therein.

h = vertical distance, in m (ft), from the middle of ℓ to the deck at side. In way of a deep tank, h is the greatest distance from the middle of ℓ to a point located at two-thirds of the distance from the top of the tank to the top of the overflow; a point located above the top of the tank not less than $0.01L + 0.15$ m or 0.46 m ($0.01L + 0.5$ ft or 1.5 ft), whichever is greatest.

c for transverse frames and reverse frames:

= 0.8 clear of tanks

= 1.0 in way of tanks

= 0.5 with struts

c for longitudinal frames:

= 1.0 without struts

= 0.55 with struts

c for inner bottom longitudinals:

= 0.85 without struts

= 0.45 with struts

Frames and reverse frames in way of tanks are not to be less than that required clear of tanks if that be greater.

1.11 Struts

Struts are to be angle bar sections fitted midway between floors. In general, they are not to be used where cargo is discharged by grabs, where heavy cargoes are carried or in the bottom forward slamming area. The permissible load, W_a, for struts is to be determined in accordance with 3-2-6/3.5.3. The calculated load, W, is to be determined by:

$W = nphs$ kN (tf, Ltf)

where

n = 10.5 (1.07, 0.03)

p = the sum of the half lengths, in m (ft), on each side of the strut, of the frames supported

h = as defined in 3-2-4/1.9

s = frame spacing, in m (ft)

Struts are to be positioned so as to divide the span into approximately equal intervals.

1.13 Inner-bottom Plating

The thickness of the inner-bottom plating throughout the length of the vessel is to be not less than that obtained from the following equation. Where applicable, the plating is to meet deep tank requirements.

$t = 0.037L + 0.009s + c$ mm

$t = 0.000445L + 0.009s + c$ in.

where

t	=	thickness, in mm (in.)
L	=	length of vessel, in m (ft), as defined in 3-1-1/3
s	=	frame spacing, in mm (in.)
c	=	1.5 mm (0.06 in.) in engine space
	=	–0.5 mm (–0.02 in.) elsewhere

Where no ceiling is fitted under cargo hatchways, except for vessels intended for the exclusive carriage of containers on the inner bottom, the thickness of the inner-bottom plating is to be increased 2.0 mm (0.08 in.). For vessels with longitudinally-framed inner bottoms, the minimum thickness of inner-bottom plating may be reduced by 1 mm (0.04 in.).

For vessels regularly engaged in trades where the cargo is handled by grabs or similar mechanical appliances, it is recommended that flush inner-bottom plating be adopted throughout the cargo space, and that the plating be suitably increased, but the increase need not exceed 5 mm (0.20 in.). It is also recommended that the minimum thickness be not less than 12.5 mm with 610 mm (0.50 in. with 24 in.) frame spacing and 19 mm with 915 mm (0.74 in. with 36 in.) frame spacing. Intermediate thicknesses may be obtained by interpolation.

Where provision is to be made for the operation or stowage of vehicles having rubber tires, and after all other requirements are met, the thickness of the inner bottom plating is to be not less than that obtained from 3-2-3/7.

Margin plates which are approximately horizontal are to have thicknesses not less than the adjacent inner bottom plating. Where they are nearly vertical, they are to be not less than the required inner bottom plating in the engine space and are to extend the full depth of the inner bottom.

1.15 Sea Chests

Where the double bottom structure forms part of a sea chest, the thickness of the plating is to be not less than the required thickness of the shell plating, using the approximate value of stiffener spacing, *s*.

1.17 Access, Lightening, Air, and Drainage Holes

Access holes in double bottom tank tops and lightening holes in nontight members are to be sufficient in size and number to assure accessibility to all parts of the double bottom. The proposed locations and sizes of the holes are to be indicated on the drawings submitted for approval. Tank top access hole covers are to be of steel or equivalent material, and where no ceiling is fitted in a cargo hold, the covers are to be protected against damage by the cargo. Air and drainage holes are to be cut in all nontight parts of the double bottom structure to assure the free escape of gases to the vents and the free drainage of liquids to the suctions.

3 Single Bottoms with Floors and Keelsons

3.1 General

Where double bottom construction is not required by 3-2-4/1.1 or is not applied, single bottom construction is to be in accordance with 3-2-4/3 or 3-2-4/5, as may be applicable.

3.3 Center Keelsons

Single-bottom vessels are to have center keelsons formed of continuous or intercostal center girder plates with horizontal top plates. The thickness of the keelson and the area of the horizontal top plate are to be not less than that obtained from the following equations. Vessels less than 30.5 m (100 ft) in length will be subject to special consideration. Tapering of the horizontal top plate area at the ends is not normally considered for vessels less than 30.5 m (100 ft) in length. The keelsons are to extend as far forward and aft as practicable.

3.3.1 Center-girder Plate Thickness Amidships

$t = 0.063L + 5$ mm

$t = 0.00075L + 0.2$ in.

3.3.2 Center-girder Plates Thickness at Ends

t = 85% of center keelson thickness amidships

3.3.3 Horizontal Top-plate Area Amidships

$A = 0.168L^{3/2} - 8$ cm^2

$A = 0.0044L^{3/2} - 1.25$ in^2

3.3.4 Horizontal Top-Plate Area at Ends [L ≥ 30.5 m (100 ft)]

$A = 0.127L^{3/2} - 1$ cm^2

$A = 0.0033L^{3/2} - 0.15$ in^2

where

t	=	thickness of center-girder plate, in mm (in.)
L	=	length of vessel, as defined in 3-1-1/3, in m (ft)
A	=	area of horizontal top plate, in cm^2 (in^2)

3.5 Side Keelsons

Side keelsons are to be arranged so that there are not more than 2.13 m (7 ft) from the center keelson to the inner side keelson, from keelson to keelson and from the outer keelson to the lower turn of bilge. Forward of the midship one-half length, the spacing of keelsons on the flat of floor is not to exceed 915 mm (36 in.). Side keelsons are to be formed of continuous rider plates on top of the floors. They are to be connected to the shell plating by intercostal plates. The intercostal plates are to be attached to the floor plates. In the engine space, the intercostal plates are to be of not less thickness than the center girder plates. The scantlings of the side keelsons are to be obtained from the following equations but need not exceed 3-2-4/3.3, if that be less.

3.5.1 Side Keelson and Intercostal Thickness Amidships

$t = 0.063L + 4$ mm

$t = 0.00075L + 0.16$ in.

3.5.2 Side Keelson and Intercostal Thickness at Ends

t = 85% of center thickness amidships

3.5.3 Side Keelson and Intercostal, Horizontal Top Plate Area Amidships

$A = 0.038L^{3/2} + 17$ cm^2

$A = 0.001L^{3/2} + 2.6$ in^2

3.5.4 Side Keelson and Intercostal, Horizontal Top Plate Area at Ends

$A = 0.025L^{3/2} + 20$ cm^2

$A = 0.00065L^{3/2} + 3.1$ in^2

t, L and A are as defined in 3-2-4/3.3.

3.7 Floors

3.7.1 Section Modulus

With transverse framing, a floor as shown in 3-2-4/Figure 1 is to be fitted on every frame and is to be of the scantlings necessary to obtain a section modulus, *SM,* not less than that obtained from the following equation:

$SM = 7.8chs\ell^2$ cm^3

$SM = 0.0041chs\ell^2$ in^3

where

c = 0.55

h = draft, d, in m (ft), as defined in section 3-1-1/9, but not to be less than $0.66D$ or $0.066L$, whichever is greater.

s = floor spacing, in m (ft)

ℓ = span, in m (ft). Where brackets are fitted in accordance with 3-1-2/5.5 and are supported by bulkheads, inner bottom or side shell, the length, ℓ, may be measured as permitted therein.

The section modulus may be calculated at the centerline of the vessel, provided the rise of floor is such that the depth at the toe of brackets is not less than one-half of the depth at the centerline. The above requirements are limited to cargo holds where cargoes of specific gravity 0.715 or less are uniformly loaded. In way of engine room and in the forward $0.2L$, the floor face bar area is to be doubled.

3.7.2 Depth

The minimum depth of floors at centerline is not be less than that obtained from the following equation:

$h_f = 62.5\ell$ mm

$h_f = 0.75\ell$ in.

where

h_f = floor depth, in mm (in.)

ℓ = unsupported span of floors, in m (ft). Where brackets are fitted in accordance with 3-1-2/5.5, the length, ℓ, may be measured as permitted therein.

3.7.3 Thickness

The minimum thickness of floors is not to be less than that obtained from the following equation:

$$t = 0.01h_f + 3 \text{ mm}$$

$$t = 0.01h_f + 0.12 \text{ in.}$$

where

t = floor thickness, in mm (in.)

h_f = floor depth, in mm (in.)

Floors under engine girders are to be not less in thickness than the thickness required for keelsons.

FIGURE 1
Plate Floors

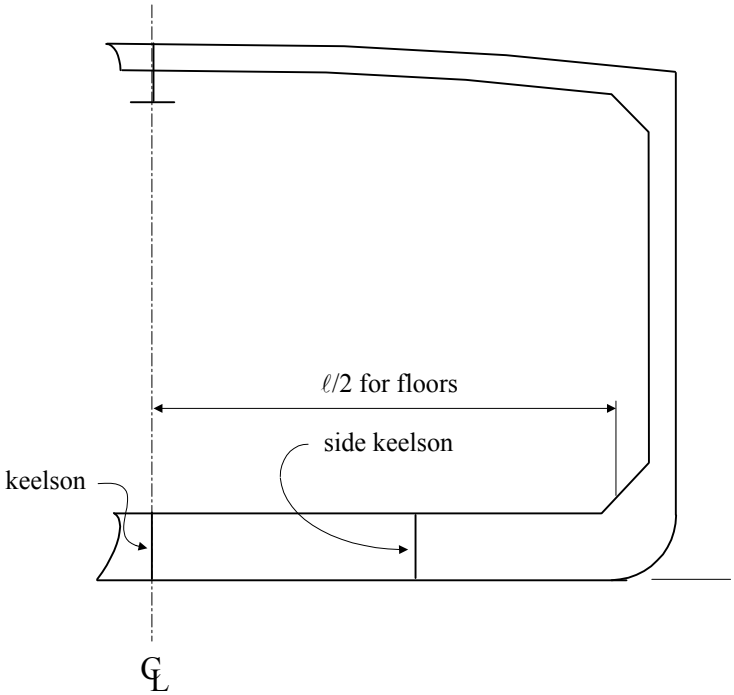

5 Single Bottoms with Longitudinal or Transverse Frames

5.1 General

Where longitudinal frames supported by bottom transverses or transverse frames supported by longitudinal girders and bottom transverses are proposed in lieu of keelsons referred to in 3-2-4/3, the construction is to be in accordance with this subsection. Frames are not to have less strength than is required for watertight bulkhead stiffeners or girders in the same location in association with head to the bulkhead deck. In way of deep tanks, frames are not to have less strength than is required for stiffeners or girders on deep tank bulkheads. See 3-2-4/Figure 2, 3-2-4/Figure 3 and 3-2-4/Figure 4.

FIGURE 2
Round Bottom Floors with Deadrise

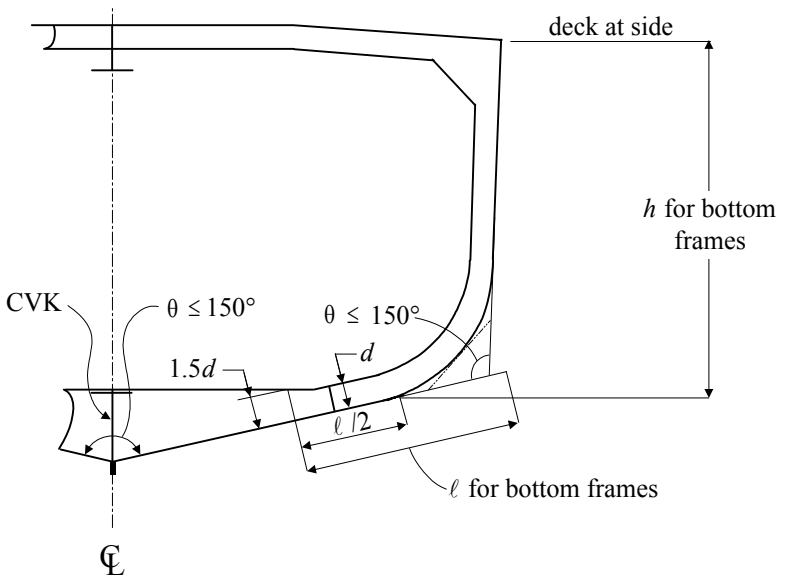

FIGURE 3
Transverse Bottom Frames with Longitudinal Side Girders

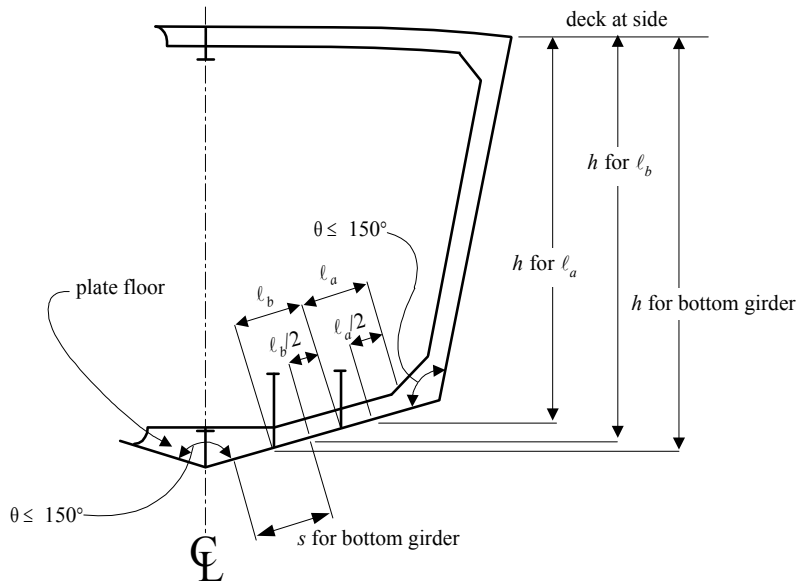

FIGURE 4
Longitudinal Frames with Transverse Webs

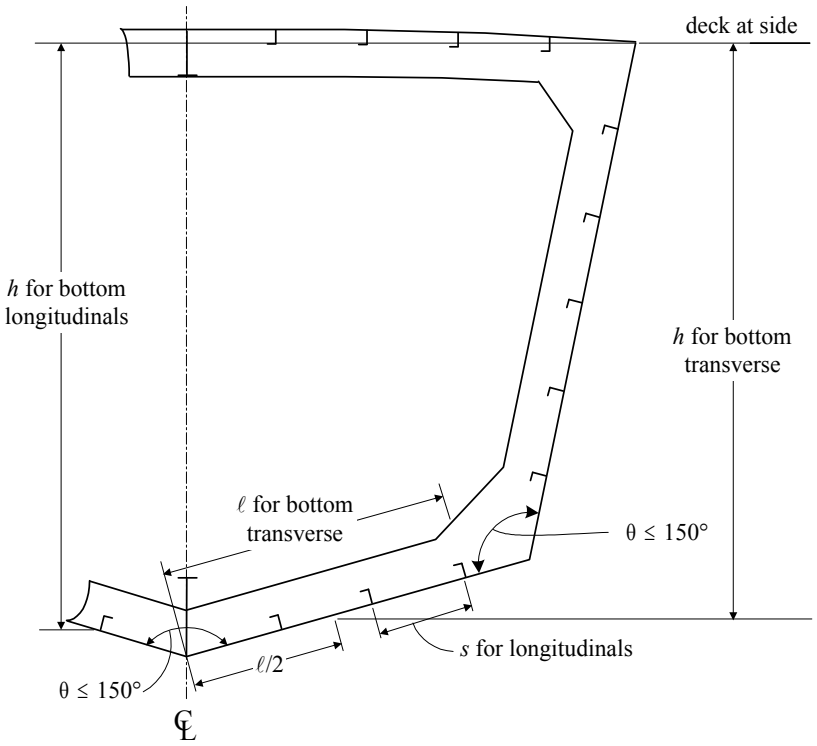

5.3 Bottom Girders and Transverses

5.3.1 Section Modulus

The section modulus, *SM*, of each bottom girder and transverse, where intended as a primary supporting member, in association with the plating to which it is attached, is not to be less than that obtained from the following equation:

$$SM = 7.8chs\ell^2 \text{ cm}^3$$

$$SM = 0.0041chs\ell^2 \text{ in}^3$$

where

c	=	0.915
h	=	vertical distance, in m (ft), from the center of area supported to the deck at side
s	=	spacing, in m (ft)
ℓ	=	unsupported span, in m (ft). Where brackets are fitted in accordance with 3-1-2/5.5 and are supported by bulkheads, inner bottom or side shell, the length, ℓ, may be measured as permitted therein.

Tripping brackets are to be fitted at intervals of about 3 m (10 ft) and stiffeners are to be fitted as may be required.

5.3.2 Depth

The minimum depth of the girder or transverse is to be not less than 2.5 times the depth of the cutouts for bottom frames, unless effective compensation for cutouts is provided, nor less than that obtained from the following equation:

$h_w = 145\ell$ mm

$h_w = 1.75\ell$ in.

where

h_w = girder or transverse depth, in mm (in.)

ℓ is defined in 3-2-4/5.3.1.

5.3.3 Thickness

The minimum thickness of the web is to be not less than that obtained from the following equation:

$t = 0.01h_w + 3$ mm

$t = 0.01h_w + 0.12$ in.

where

t = floor thickness, in mm (in.)

h_w is as given in 3-2-4/5.3.2.

5.3.4 Non-prismatic Members

Where the cross sectional properties of the member is not constant throughout the length of the girders or transverses, the above requirements will be specially considered with particular attention being paid to the shearing forces at the ends.

5.5 Center Girder

In general, a center girder is to be fitted, complying with 3-2-4/5.3; however, alternative arrangements that provide suitable support for docking will be considered.

5.7 Frames

The section modulus, *SM*, of each bottom frame to the chine or upper turn of bilge, in association with the plating to which it is attached, is not to be less than that obtained from the following equation:

$SM = 7.8chs\ell^2$ cm^3

$SM = 0.0041chs\ell^2$ in^3

where

c = 0.80 for transverse frames clear of tanks

= 1.00 for longitudinal frames clear of tanks, and in way of tanks

= 1.00 for transverse frames in way of tanks

s = frame spacing in, m (ft)

ℓ = unsupported span, in m (ft), Where brackets are fitted in accordance with 3-1-2/5.5 and are supported by bulkheads, inner bottom or side shell, the length, ℓ, may be measured as permitted therein.

h = vertical distance, in m (ft), from the middle of ℓ to the deck at side. In way of a deep tank, h is the greatest of the distances, in m (ft), from the middle of ℓ to a point located at two-thirds of the distance from the top of the tank to the top of the overflow, a point located above the top of the tank not less than $0.01L + 0.15$ m ($0.01L + 0.5$ ft) or 0.46 m (1.5 ft), whichever is greatest.

L is as defined in 3-1-1/3.

7 Fore-end Strengthening

7.1 General

For vessels 61 m (200 ft) in length and over, where the heavy weather ballast draft forward is less than $0.04L$, strengthening of the flat of bottom forward is to be in accordance with 3-2-4/7.3, 3-2-4/7.5, 3-2-4/7.7 and 3-2-2/3.5. Information on the heavy weather ballast draft forward used for the required fore-end strengthening is to be furnished to the master for guidance. The heavy weather ballast draft is also to be indicated on the shell expansion plan.

7.3 Extent of Strengthening

The flat of bottom forward is defined as being forward of the locations indicated in 3-2-4/Table 1. For intermediate values of C_b, the locations are to be obtained by interpolation. Aft of these locations, a suitable transition is to be provided between the increased scantlings and structural arrangements of the flat of bottom forward and the structure aft of the locations given in 3-2-4/Table 1.

TABLE 1
Location of Flat of Bottom Forward

C_b is the block coefficient at the summer load waterline, based on L, as defined in 3-1-1/3.

C_b	*Location Forward of Amidships*
0.6 or less	$0.25L$
0.8 or more	$0.30L$

7.5 Longitudinal Framing

When longitudinal framing is used for the bottom and inner bottom, longitudinals and side girders are to be continued as far forward as practicable at not more than their amidship spacing. The section modulus of flat of bottom longitudinals forward of the location indicated in 3-2-4/Table 1 is to be not less than required by the following equation, nor less than required by 3-2-4/5.7.

$$SM = 8.47(0.005L^2 - 1.3d_f^2)s\ell^2/d_f \quad \text{cm}^3$$

$$SM = 0.0044(0.005L^2 - 1.3d_f^2)s\ell^2/d_f \quad \text{in}^3$$

where

d_f = heavy weather ballast draft at the forward perpendicular, in m (ft)

L = length of vessel, as defined in 3-1-1/3

s = spacing of longitudinals, in m (ft)

ℓ = distance between floors, in m (ft)

The spacing of floors forward of 0.25*L* forward of amidships is to be not greater than that given in 3-2-4/Table 2, nor greater than the spacing amidships.

TABLE 2
Spacing of Floors

d_f	C_b	*From 0.25L to 0.3L from amidships*	*Forward of 0.3L from amidships*
0.02*L* or less	0.60 or less	3*s*	2*s*
	> 0.60	3*s*	3*s*
0.035*L*	all values	3*s*	3*s*
0.04*L* and more	all values	As required elsewhere in the Rules	

Notes:

d_f is the heavy weather ballast draft at the forward perpendicular and C_b is the block coefficient at the summer load waterline, based on *L* as defined in 3-1-1/3.

s is the spacing of the transverse side frames, or $s = 2.08L + 438$ (mm) [$0.025L + 17.25$ (in.)], where the side shell is longitudinally framed.

For values of d_f between 0.02*L*, 0.035*L* and 0.04*L* m (ft), the required floor spacing may be obtained by interpolation.

7.7 Transverse Framing

Where the heavy weather ballast draft forward is less than 0.04*L*, solid floors are to be fitted on every frame and additional full-depth and half-depth side girders are to be introduced so that the spacing of full-depth girders forward of the locations in 3-2-4/Table 1 does not exceed 2.13 m (7 ft) and so that the spacing of alternating half- and full-depth girders forward of the location in 3-2-4/Table 1 does not exceed 1.07 m (3.5 ft). Where the heavy weather ballast draft forward is 0.04*L* or more, the arrangement of solid floors and side girders may be in accordance with 3-2-4/1.7 and 3-2-4/1.5.

9 Higher-strength Materials

9.1 General

In general, applications of higher-strength materials for bottom structures are to meet the requirements of this section, but may be modified as permitted by the following paragraphs. Care is to be exercised to avoid the adoption of reduced thickness of material such as might be subject to damage during normal operation, and calculations are to be submitted to show adequate provision against buckling. Longitudinal framing members are to be of essentially the same material as the plating they support.

9.3 Inner-bottom Plating

Inner-bottom plating, where constructed of higher-strength material and where longitudinally framed, is to be not less in thickness than required by 3-2-4/1.13 or for tank top plating as modified by the following equation:

$$t_{hts} = [t_{ms} - C][(Q + 2\sqrt{Q})/3] + C$$

where

t_{hts} = thickness of higher-strength material, in mm (in.)

t_{ms} = thickness of mild steel, as required by 3-2-4/1.13, in mm (in.), increased where required for no ceiling

C = 3 mm (0.12 in.) or 5 mm (0.20 in.) where the plating is required by 3-2-4/1.13 to be increased for no ceiling

Q = as defined in 3-2-1/7.5

The thickness of inner-bottom plating, where transversely framed, will be specially considered.

Where cargo is handled by grabs, or similar mechanical appliances, the recommendations of 3-2-4/1.13 are applicable to t_{hts}.

9.5 Bottom and Inner-bottom Longitudinals

The section modulus of bottom and inner-bottom longitudinals, where constructed of higher-strength material and in association with the higher-strength plating to which they are attached, are to be determined as indicated in 3-2-4/1.9, except that the value may be reduced by the factor *Q,* as defined in 3-2-1/7.5.

9.7 Center Girders, Side Girders and Floors

Center girders, side girders and floors, where constructed of higher-strength materials, are generally to comply with the requirements of 3-2-4/1.3, 3-2-4/1.5 or 3-2-4/1.7, but may be modified as permitted by the following equation:

$$t_{hts} = [t_{ms} - C][(Q + 2\sqrt{Q})/3] + C$$

where

t_{hts}, t_{ms} and C are defined in 3-2-4/9.3.

Q is as defined in 3-2-1/7.5.

11 Machinery Space

11.1 General

Special attention is directed to arranging for the provision of plated through beams and such casing and pillar supports as are required to secure structural efficiency. All parts of the machinery, shafting, etc., are to be efficiently supported and the adjacent structure is to be adequately stiffened.

Consideration is to be given to the submittal of plans of the foundations for main propulsion units, reduction gears and thrust bearings and of the structure supporting those foundations to the machinery manufacturer for review. (See also 4-3-1/21.)

11.3 Engine Foundations

11.3.1 Single Bottom Vessels

In vessels with single bottoms, the engines are to be seated on thick plates laid across the top of deep floors or upon heavy foundation girders efficiently bracketed and stiffened. Intercostal plates are to be fitted between the floors beneath the lines of bolting to distribute the weight effectively through the bottom structure to the shell. Seat plates are to be of thickness and width appropriate to the holding-down bolts and are to be effectively attached to girders and intercostals.

11.3.2 Double Bottom Vessels

On vessels with double bottoms, the engines are to be seated directly upon thick inner-bottom plating or upon thick seat plates on top of heavy foundations arranged to distribute the weight effectively. Additional intercostal girders are to be fitted within the double bottom to ensure the satisfactory distribution of the weight and the rigidity of the structure.

11.5 Thrust Foundations

Thrust blocks are to be bolted to efficient foundations extending well beyond the thrust blocks and arranged to distribute the loads effectively into the adjacent structure. Extra intercostal girders, effectively attached, are to be fitted in way of the foundations, as may be required.

11.7 Shaft Stools and Auxiliary Foundations

Shaft stools and auxiliary foundations are to be of ample strength and stiffness in proportion to the weight supported.

PART

3

CHAPTER **2 Hull Structures and Arrangements**

SECTION **5 Side Frames, Webs, and Stringers**

1 General

1.1 Basic Considerations

Frames or webs and stringers are not to have less strength than is required for watertight bulkhead stiffeners, or girders, in the same location in association with heads to the bulkhead deck. In way of deep tanks, frames or webs and stringers are not to have less strength than is required for stiffeners or girders on deep-tank bulkheads. The calculated section modulus is based upon the intact sections being used. Where a hole is cut in the flange of any member or a large opening is made in the web of the member, the net section is to be used in determining the section modulus of the member in association with the plating to which it is attached.

1.3 End Connections

At the ends of unbracketed frames, both the web and the flange are to be welded to the supporting member. At bracketed end connections, continuity of strength is to be maintained at the connection to the bracket and at the connection of the bracket to the supporting member. Welding is to be in accordance with 3-2-16/Table 1. Where longitudinal frames are not continuous at bulkheads, end connections are to effectively develop their sectional area and resistance to bending. Where a structural member is terminated, structural continuity is to be maintained by suitable back-up structure, fitted in way of the end connection of frames, or the end connection is to be effectively extended by a bracket or flat bar to an adjacent beam, stiffener, etc.

3 Longitudinal Side Frames

3.1 Section Modulus

The section modulus, *SM*, of each longitudinal side frame above the chine or upper turn of bilge is to be not less than that obtained from the following equation:

$$SM = 7.8chs\ell^2 \text{ cm}^3$$

$$SM = 0.0041chs\ell^2 \text{ in}^3$$

where

c = 0.915

h = vertical distance, in m (ft), from the frame to the freeboard deck at side, but not less than $0.02L + 0.46$ m ($0.02L + 1.5$ ft)

s = frame spacing, in m (ft)

ℓ = straight-line unsupported span, in m (ft). Where brackets are fitted in accordance with 3-1-2/5.5 and are supported by bulkheads, the length, ℓ, may be measured as permitted therein.

5 Transverse Side Frames

5.1 Section Modulus

The section modulus, *SM*, of each transverse side frame other than tween deck frames above the chine or upper turn of bilge, in association with the plating to which the frame is attached, is not to be less than that obtained from the following equation. See 3-2-5/Figure 1, 3-2-5/Figure 2 and 3-2-5/Figure 3.

$$SM = 7.8chs\ell^2 \text{ cm}^3$$

$$SM = 0.0041chs\ell^2 \text{ in}^3$$

where

c = 0.915 for frames having no tween decks above

= $0.90 + 5.8/\ell^3$ ($0.90 + 205/\ell^3$) for frames having tween decks above

s = frame spacing, in m (ft)

ℓ = straight-line unsupported span, in m (ft). Where brackets are fitted in accordance with 3-1-2/5.5 and are supported by decks or inner bottoms, the length ℓ may be measured as permitted therein. Where tween decks are located above the frame, ℓ is to be taken as the length between the toes of the brackets, except where beam knees are fitted on alternate frames, ℓ is to be increased by one half the depth of the beam knees. ℓ is not to be taken less than 2.1 m (7.0 ft).

h = on frames having no tween decks above, the vertical distance, in m (ft), from the mid length of the frame to the freeboard deck at side, but not less than $0.02L + 0.46$ m ($0.02L + 1.5$ ft).

= on frames having tween decks above, the vertical distance, in m (ft), from the middle of ℓ to the load line or 0.4ℓ, whichever is greater, plus $bh_1/33$ ($bh_1/100$).

b = horizontal distance, in m (ft), from the outside of the frames to the first row of deck beam supports.

h_1 = vertical distance, in m (ft), from the deck at the top of the frame to the bulkhead or freeboard deck plus the height of all cargo tween deck spaces above the bulkhead or freeboard deck plus one-half the height of all passenger spaces above the bulkhead or freeboard deck, or plus 2.44 m (8 ft), if that is greater. Where the cargo load differs from 715 kgf/m^3 (45 lbf/ft^3), h_1 is to be adjusted accordingly.

FIGURE 1
Transverse Side Frame

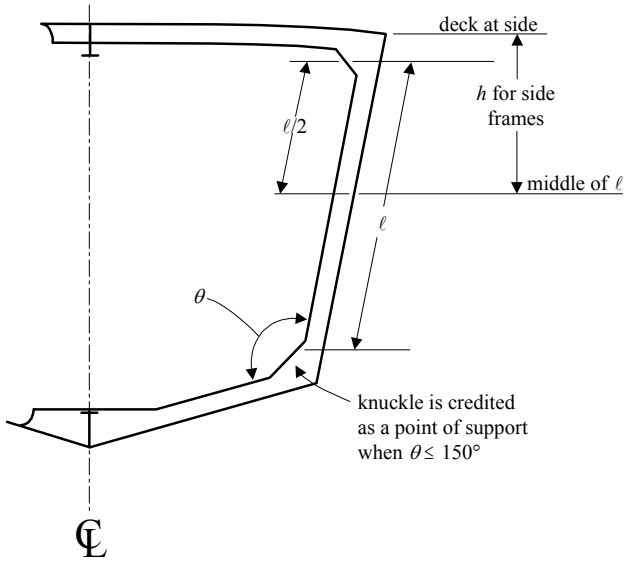

FIGURE 2
Transverse Side Frame

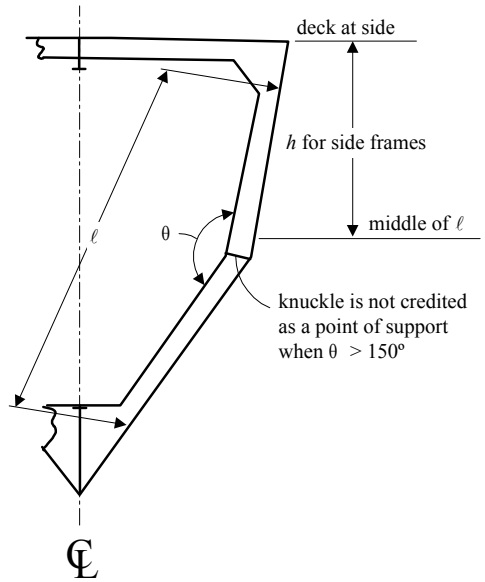

FIGURE 3
Hold and Tween Deck Frames

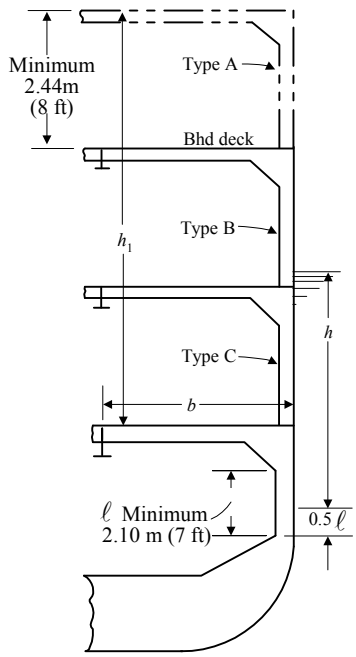

5.3 Tween-deck Frames

The section modulus, *SM*, of each transverse side frame above the chine or upper turn of bilge, in association with the plating to which the frame is attached, is not to be less than obtained from the following equation:

$SM = 7.8chs\ell^2$ cm^3

$SM = 0.0041chs\ell^2$ in^3

where

c	=	0.90
h	=	$0.032L - 0.68$ m ($0.032L - 2.23$ ft) type A frame
	=	$0.049L - 0.81$ m ($0.049L - 2.66$ ft) type B frame
	=	$0.052L - 0.13$ m ($0.052L - 0.43$ ft) type C frame
	=	in no case less than the vertical distance, in m (ft), from the mid-length of the frame to the freeboard deck, but not less than $0.02L + 0.46$ m ($0.02L + 1.5$ ft)
s	=	frame spacing, in m (ft)
ℓ	=	tween deck height or unsupported length along frame, whichever is greater, in m (ft), not to be taken less than 2.13 m (7.0 ft). For frame types, see 3-2-5/Figure 3. Forward of $0.125L$, frames above the bulkhead or freeboard deck are to be type B frames.

Longitudinal tween deck frames are to meet the requirements of 3-2-5/3. The section modulus of each longitudinal tween deck frame forward of $0.125L$ from the stem is to be not less than required by 3-2-5/5.1 for transverse frames in the same location, taking ℓ as the unsupported span along the frame length.

5.5 Peak Frames

5.5.1 General

For vessels 61 m (200 ft) or greater in length, peak frames are to be efficiently connected to deep floors of not less thickness than that obtained from 3-2-4/1.7 for floors in engine spaces. The floors are to extend as high as necessary to give lateral stiffness to the structure and are to be properly stiffened on their upper edges. Care is to be taken in arranging the framing and floors to assure no wide areas of unsupported plating adjacent to the stem. Breast hooks are to be arranged at rectangular intervals at and between the stringers above and below the waterline. In general, the frames above the lowest deck are to be as required by 3-2-5/5, but in vessels having large flare with unusually long frames, stringers and webs above the lowest deck or suitably increased frames may be required.

5.5.2 Section Modulus

For vessels 61 m (200 ft) or greater in length, the section modulus of each peak frame is to be not less than that obtained from the following equation:

$SM = 7.8chs\ell^2$ cm^3

$SM = 0.0041chs\ell^2$ in^3

where

c	=	1.13 for forepeak frames
	=	0.90 for aftpeak frames

h	=	$0.110L - 1.990$ m ($0.110L - 6.53$ ft)	for forepeak frames
	=	$0.062L - 1.122$ m ($0.062L - 3.68$ ft)	for aftpeak frames
s	=	frame spacing, in m (ft)	
ℓ	=	straight line unsupported span, in m (ft), not to be taken less than 2.1 m (7.0 ft).	
L	=	length as defined in 3-1-1/3, but is not to be taken less than 30 m (98.5 ft)	

7 Side Web Frames

7.1 Section Modulus

The section modulus, SM, of each side web frame supporting longitudinal framing or shell stringers above the chine or upper turn of bilge, in association with the plating to which the web frame is attached, is not to be less than that obtained from the following equation:

$$SM = 7.8chs\ell^2 \text{ cm}^3$$

$$SM = 0.0041chs\ell^2 \text{ in}^3$$

where

c	=	0.915 aft of the forepeak
	=	1.13 in the forepeak of vessel 61 m (200 ft) or greater in length.
s	=	frame spacing, in m (ft)
ℓ	=	straight-line unsupported span, in m (ft). Where brackets are fitted in accordance with 3-1-2/5.5 and are supported by decks or inner bottoms, the length, ℓ, may be measured as permitted therein
h	=	on frames having no tween decks above, the vertical distance, in m (ft), from the mid length of the frame to the freeboard deck at side, but not less than $0.02L + 0.46$ m ($0.02L + 1.5$ ft).
	=	on frames having tween decks above, the vertical distance, in m (ft), from the middle of ℓ to the load line or 0.5ℓ, whichever is greater, plus $bh_1/45K$ ($bh_1/150K$).
b	=	horizontal distance, in m (ft), from the outside of the frames to the first row of deck beams supports.
h_1	=	vertical distance, in m (ft), from the deck at the top of the web frame to the bulkhead or freeboard deck plus the height of all cargo tween deck spaces above the bulkhead or freeboard deck plus one-half the height of all passenger spaces above the bulkhead or freeboard deck, or plus 2.44 m (8 ft), if that is greater. Where the cargo load differs from 715 kgf/m^3 (45 lbf/ft^3), h_1 is to be adjusted accordingly.
K	=	1.0 where the deck is longitudinally framed and a deck transverse is fitted in way of each web frame.
	=	the number of transverse frame spaces between web frames where the deck is transversely framed.

7.3 Tween-deck Web Frames

Tween-deck web frames are to be fitted below the bulkhead deck over the hold web frames, as may be required to provide continuity of transverse strength above the main web frames in holds and machinery space.

7.5 Proportions

The depth of each web frame is to be not less than 125ℓ mm (1.5ℓ in.) or, unless effective compensation is provided for cutouts, 2.5 times the cutout for frame or longitudinal if greater. The thickness of the web of web frame or stringer is to be not less than 0.01 times the depth plus 3 mm (0.12 in.), ℓ is as defined in 3-2-5/7.1.

7.7 Tripping Brackets and Stiffeners

7.7.1 Stiffeners

Where the shell is longitudinally framed, stiffeners attached to the longitudinal frames and extending to the full depth of the web frame are to be fitted at least at alternate longitudinal frames. Other stiffening arrangements may be considered based on the structural stability of the web plates.

7.7.2 Tripping Brackets

Tripping brackets are to be fitted at intervals of about 3 m (10 ft) and near the change of section. Where the breadth of the flanges on either side of the web exceeds 200 mm (8 in.), tripping brackets are to be arranged to support the flange.

9 Recommendation for Vessels Subject to Impact

For vessels subject to impact loadings during routines, it is recommended that side frames with a section modulus 25% greater than that obtained above be provided.

11 Side Stringers

11.1 Section Modulus

The section modulus, *SM*, of each side stringer in association with the plating to which the side stringer is attached is not to be less than that obtained from the following equation:

$$SM = 7.8chs\ell^2 \text{ cm}^3$$

$$SM = 0.0041chs\ell^2 \text{ in}^3$$

where

c = 0.915

= 1.13 in the forepeak of vessel 61 m (200 ft) or greater in length.

h = vertical distance, in m (ft), from the middle of s to the freeboard deck at side, but not less than $0.02L + 0.46$ m ($0.02L + 1.5$ ft).

= for stringers above the lowest deck or at a similar height in relation to the design draft, not less than given in 3-2-5/5.3 appropriate to the tween deck location.

= for stringers in the peaks of vessels 61 m (200 ft) or greater in length, not less than given in 3-2-5/5.5.

s = sum of the half lengths, in m (ft), (on each side of the stringer) of the frames supported.

ℓ = span, in m (ft), between web frames, or between web frame and bulkhead. Where brackets are fitted in accordance with 3-1-2/5.5 and are supported by transverse bulkheads, the length, ℓ, may be measured as permitted therein.

11.3 Proportions

Side stringers are to have a depth of not less than 0.125ℓ (1.5 in per ft of span ℓ) plus one-quarter of the depth of the slot for the frames, but need not exceed the depth of the web frames to which they are attached. In general, the depth is not to be less than 2.5 times the depth of the slots, or the slots are to be fitted with filler plates. The thickness of each stringer is to be not less than $0.014L + 7.2$ mm ($0.00017L + 0.28$ in.) where L is as defined in 3-1-1/3.

11.5 Tripping Brackets and Stiffeners

11.5.1 Stiffeners

Stiffeners attached to the frame and extending to the full depth of the stringer are to be fitted at least at alternate transverse frames. Other stiffening arrangements may be considered based on the structural stability of the web plates.

11.5.2 Tripping Brackets

The arrangements of tripping brackets are to be in accordance with 3-2-5/7.7.2.

This Page Intentionally Left Blank

PART

3

CHAPTER **2 Hull Structures and Arrangements**

SECTION **6 Beams, Deck Girders, Deck Transverses, and Pillars**

1 Beams

1.1 Spacing

Beams may be fitted either transversely or longitudinally. Transverse beams, where provided, are to be fitted at each transverse side frame at the tops of tanks, tunnel tops, and bulkhead recesses. Elsewhere, these beams are not to be more than two frame spaces apart and those in different tiers are to be fitted on the same frames.

1.3 Section Modulus

The section modulus, *SM*, of each transverse or longitudinal beam, in association with the plating to which it is attached, is not to be less than that obtained from the following equations:

$$SM = 7.8chs\ell^2 \text{ cm}^3$$

$$SM = 0.0041chs\ell^2 \text{ in}^3$$

where

c	=	1.00 for transverse or longitudinal beams at the tops of tank, with deep tank h
	=	$1/(1.709 - 0.651k)$ for longitudinal beams of strength decks and effective lower decks
	=	0.60 for all other transverse beams
	=	0.70 for all other longitudinal beams
k	=	$SM_R Y/I_A$
SM_R	=	required hull-girder section modulus amidships from 3-2-1/3, in cm^2-m (in^2-ft)
Y	=	distance, in m (ft), from the neutral axis to the deck being considered, always taken as positive
I_A	=	hull girder moment of inertia of the vessel amidships, in cm^2-m^2 (in^2-ft^2)

The values of I_A and Y are to be those obtained using the area of the longitudinal beams given by the above equation.

s = beam spacing, in m (ft)

ℓ = unsupported span, in m (ft). At the tops of tanks and bulkhead recesses, the maximum span permissible between supports is 4.57 m (15 ft). Where brackets are fitted in accordance with 3-1-2/5.5, the length, ℓ, may be measured as permitted therein.

h = height, in m (ft), as follows:

= *for a deep tank top,* is the greatest of the following: two-thirds of the distance from the top of the tank to the top of the overflow, or

- two-thirds of the distance from the top of the tank to the bulkhead deck or freeboard deck, or
- the height to the load line, or
- $0.01L + 0.15$ m ($0.01L + 0.5$ ft)

= *for a lower deck on which cargo or stores are carried,* the tween-deck height at side. Where the cargo weights differ from 7010 N/m^3 (715 kgf/m^3, 45 lbf/ft^3), h is to be proportionately adjusted.

= *for an exposed deck on which cargo is carried,* 3.66 m (12 ft). Where it is intended to carry deck cargoes in excess of 25850 N/m^2 (2636 kgf/m^2, 540 lbf/ft^2), this head is to be increased in proportion to the added loads which will be imposed on the structure.

Elsewhere, the value of h is obtained from the appropriate equation below, where L = length of the vessel, in m (ft), as defined in 3-1-1/3.

1.3.1 Exposed Freeboard Deck Having no Deck Below

$h = 0.02L + 0.76$ m

$h = 0.02L + 2.5$ ft

1.3.2 Exposed Freeboard Deck Having a Deck Below, Forecastle Deck, Superstructure Deck Forward of Amidships 0.5L

$h = 0.02L + 0.46$ m

$h = 0.02L + 1.5$ ft

1.3.3 Freeboard Deck within Superstructure, any Deck Below Freeboard Deck, Superstructure Deck Between 0.25L Forward of and 0.30L Aft of Amidships

$h = 0.01L + 0.61$ m

$h = 0.01L + 2.0$ ft

1.3.4 All Other First Tier Above Freeboard Deck Locations

$h = 0.01L + 0.30$ m

$h = 0.01L + 1.0$ ft

1.3.5 Second Tier Above Freeboard Deck; Deckhouse Top or Short Superstructure*

$h = 0.01L + 0.15$ m

$h = 0.01L + 0.5$ ft

* Where used only as weather covering, may be used as 3-2-6/1.3.6, but L need not be taken greater than 45.70 m (150 ft).

1.3.6 Third Tier Above Freeboard Deck Deckhouse Top or Short Superstructure*

$h = 0.01L$ m

$h = 0.01L$ ft

* Where used only as weather covering, may be used as 3-2-6/1.3.6, but L need not be taken greater than 45.70 m (150 ft).

1.5 Special Heavy Beams

Special reinforced beams are to be fitted under concentrated loads such as the ends of deckhouses, masts, winches, auxiliary machinery, etc. Beams at the heads of web frames are to be suitably increased in strength and stiffness.

1.6 Deck Fittings *(2007)*

1.6.1 General

The strength of supporting hull structures used for mooring operations and/or normal towing operations at bow, sides and stern are to comply with the requirements of this section.

Deck fittings for mooring and/or towing are to be located on longitudinals, beams and/or girders, which are part of the deck construction so as to facilitate efficient distribution of the mooring and/or towing load. The same attention is to be paid to recessed bitts, if fitted, of their structural arrangements and strength of supporting structures.

1.6.2 Design Loads

Unless greater safe working load (SWL) of deck fittings is specified by the applicant, the minimum design load to be used is the greater values obtained from 3-2-6/1.6.2(a) or 3-2-6/1.6.2(b), whichever is applicable:

1.6.2(a) Mooring Operations. The minimum design load for deck fittings for mooring operations is the applicable value obtained from 3-2-6/1.6.2(a)i) or 3-2-6/1.6.2(a)ii):

i) *Mooring Line Force.* 1.25 times the breaking strength of the mooring line according to 3-5-1/Table 2 for each equipment number (EN). EN is the corresponding value used for determination of the vessel's equipment. (See Note)

Notes:

1 Side projected area including maximum stacks of deck cargoes is to be taken into account for assessment of lateral wind forces, arrangements of tug boats and selection of mooring lines.

2 Where the tabular breaking strength exceeds 490 kN (50,000 kgf, 110,200 lbf), the breaking strength of individual mooring line may be reduced with corresponding increase of number of the mooring lines, provided that the total breaking load of all lines aboard the vessel is not less than the total loads as specified in 3-5-1/Table 2. The number of mooring lines is not less than 6 and no one line is to have a strength less than 490 kN. (See also 3-5-1/17 and 3-5-1/19.7)

ii) *Mooring Winch Force.* The design load applied to supporting hull structures for winches, etc. is to be 1.25 times the intended maximum brake holding load and, for capstans, 1.25 times the maximum hauling-in force.

1.6.2(b) Towing Operations. The minimum design load for deck fittings for towing operations is the applicable value obtained from 3-2-6/1.6.2(b)i or 3-2-6/1.6.2(b)ii):

i) *Normal towing operations (e.g., harbor/maneuvering).* 1.25 times the intended maximum towing load (e.g., static bollard pull) as indicated on the towing and mooring arrangements plan.

ii) *Other towing service (e.g., escort).* The nominal breaking strength of the tow line according to the 3-5-1/Table 2 for each equipment number (EN). EN is the corresponding value used for determination of the vessel's equipment. (See Note)

Note: Side projected area including maximum stacks of deck cargoes is to be taken into account for assessment of lateral wind forces, arrangements of tug boats and selection of mooring lines.

1.6.2(c) Application of Design Loads. The design load is to be applied through the mooring line or tow line, whichever is applicable, according to the arrangement shown on the mooring and towing arrangements plan.

The method of application of the design load to the supporting hull structures is to be taken into account such that the total load need not be more than twice the design load specified in 3-2-6/1.6.2(b) above, i.e., no more than one turn of one line (see 3-2-6/Figure 1 below).

FIGURE 1
Application of Design Loads *(2007)*

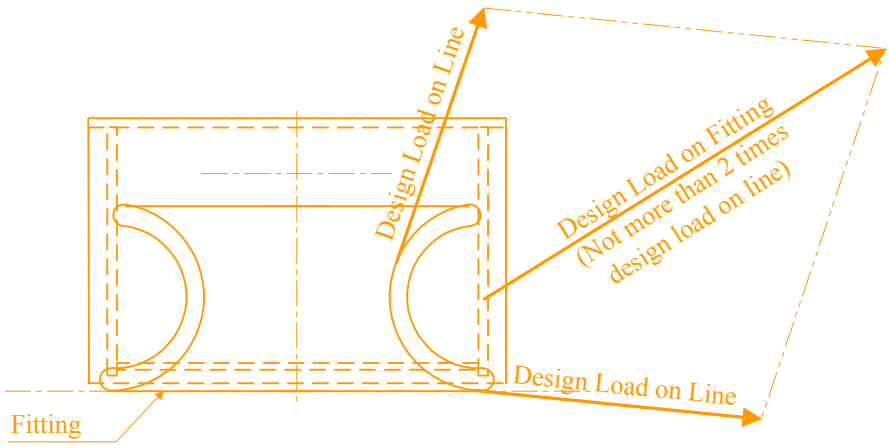

When a specific SWL is applied for a deck fitting at the request of the applicant, by which the design load will be greater than the above minimum values, the strength of the supporting hull structures is to be designed using this specific design load.

1.6.3 Supporting Structures

1.6.3(a) Arrangement. The reinforced structural members (e.g., carling) are to be arranged beneath the deck where deck fittings are located and effectively distribute the loads from deck fittings for any variation of direction (horizontally and vertically).

1.6.3(b) Line Forces. The acting point of the mooring and/or towing force on deck fittings is to be taken at the attachment point of a mooring line or a towing line, as applicable.

1.6.3(c) Allowable Stresses. Allowable stresses under the design load conditions as specified in 3-2-6/1.6.2 are as follows:

- Normal stress: 100% of the specified minimum yield point of the material;
- Shearing stress: 60% of the specified minimum yield point of the material;

No stress concentration factors being taken into account. Normal stress is the sum of bending stress and axial stress with the corresponding shearing stress acting perpendicular to the normal stress.

1.6.4 Scantlings

1.6.4(a) Net Scantlings. The net minimum scantlings of the supporting hull structure are to comply with the requirements given in 3-2-6/1.6.3. The net thicknesses, t_{net}, are the member thicknesses necessary to obtain the above required minimum net scantlings. The required gross thicknesses are obtained by adding the total corrosion additions, t_c, given in 3-2-6/1.6.4(b), to t_{net}.

1.6.4(b) Corrosion Addition. The total corrosion addition, t_c, in mm (in.), for both sides of the hull supporting structure is not to be less than the following values:

- Ships covered by Common Structural Rules (CSR) for bulk carriers and CSR for double hull oil tankers: Total corrosion additions defined in these Rules
- Other ships: 2.0 (0.08)

1.7 Container Loading

Where it is intended to carry containers, the exact locations of the container pads and the maximum total static load on the pads are to be indicated on the plans. Where the pads are not in line with the supporting structures, headers are to be provided to transmit the loads to these members.

Each member intended to support containers is to have a section modulus, *SM*, in cm^3 (in^3), not less than that obtained from the following equation:

$$SM = M/f$$

where

M = maximum bending moment due to maximum static container loading in kN-cm (kgf-cm, Ltf-in)

f = permissible maximum bending stress, as given in 3-2-6/Table 1.

In determining the maximum bending moment, members may be considered fixed-ended, provided the member is continuous over the adjacent spans or is effectively attached to a bulkhead stiffener or frame or has suitable end connections. Where this is not the case, the member is to be considered simply-supported. Where weather deck containers are supported by pedestals, the section modulus required by 3-2-6/1.3, with h equal to the distance between the deck and the underside of the container, but not greater than 50% of the value given in 3-2-1/1.3.1 through 3-2-1/1.3.6, is to be added to the above required section modulus.

TABLE 1
Values of f

	kN/cm^2	kgf/cm^2	Ltf/in^2
Effective longitudinal members	12.36	1262	8
Transverse members and longitudinal members inside the line of openings	13.90	1420	9

The net sectional area of the web of the member in cm^2 (in^2), including effective brackets, where applicable, is to be not less than that obtained from the following equation:

$$A = F/q$$

where

F = shearing force at the point under consideration, kN (kgf, Ltf)

q = allowable average shear stress in the web, not to exceed 10.35 kN/cm^2 (1057 kgf/cm^2, 6.7 Ltf/in^2)

3 Deck Girders and Deck Transverses

3.1 General

Girders and transverses are to be fitted as required to support beams and longitudinals. Additional girders are to be fitted as required under masts, king posts, deck machinery or other heavy concentrated loads.

3.3 Deck Girders and Transverses Clear of Tanks

Section modulus, *SM,* of each longitudinal deck girder and deck transverse clear of tanks is not to be less than that obtained from the following equation:

$$SM = 7.8cbh\ell^2 \text{ cm}^3$$

$$SM = 0.0041cbh\ell^2 \text{ in}^3$$

where

c	=	0.60
b	=	mean breadth of area of deck supported (for girders), or spacing of deck transverses (for transverses), in m (ft)
h	=	height, in m (ft), as required by 3-2-6/1.3 for the beams supported
ℓ	=	unsupported span, in m (ft). Where brackets are fitted at bulkhead supports, in accordance with 3-1-2/5.5, the length, ℓ, may be measured as permitted therein.

3.5 Proportions

The minimum depth of a deck girder or transverse supporting member is to be 58.3ℓ mm (0.7ℓ in.), where ℓ is as defined in 3-2-6/3.3; the depth is also not to be less than 2.5 times the cutout for the beam or longitudinal unless effective compensation is provided for the cutouts. The minimum thickness is to be 1 mm per 100 millimeters (0.01 in. per inch) of depth plus 4 mm (0.16 in.).

3.7 Tripping Brackets and Stiffeners

Tripping brackets are to be fitted on girders and transverses at a spacing of about 3 m (10 ft). Stiffeners are to be fitted as may be required.

3.9 Deck Girders and Transverses in Tanks

The requirements for deck girders or transverse supporting members in tanks may be obtained in the same manner as given in 3-2-6/3.3, 3-2-6/3.5 and 3-2-6/3.7, except that c is equal to 0.915. The minimum depth of a girder or transverse supporting member is to be 83.3ℓ mm (1.0ℓ in.), where ℓ is as defined in 3-2-6/3.3.

3.11 Hatch Side Girders

Scantlings for hatch side girders supporting athwartship shifting beams or supporting hatch covers are to be obtained in the same manner as deck girders (3-2-6/3.3 and 3-2-6/3.9). Such girders along lower deck hatches under trunks in which covers are omitted are to be increased in proportion to the extra load which may be required to be carried due to the loading up into the trunks. The structure on which the hatch covers are seated is to be effectively supported.

Where deep coamings are fitted above decks, such as at weather decks, the girder below deck may be modified so as to obtain a section modulus in cm^3 (in^3), when taken in conjunction with the coaming up to and including the horizontal coaming stiffener, of not less than 35% more than the required girder value, as derived from 3-2-6/3.3. Where hatch side girders are not continuous under deck beyond the hatchways to the bulkheads, brackets extending for at least two frame spaces beyond the ends of the hatchways are to be fitted.

Where hatch side girders are continuous beyond the hatchways, care is to be taken in proportioning their scantlings beyond the hatchway. Gusset plates are to be fitted at hatchway corners, arranged so as to tie effectively the flanges of the side coamings and extension pieces or continuous girders and the hatch-end beam flanges both beyond and in the hatchway.

3.13 Container Loading

Where it is intended to carry containers, the structure is to comply with 3-2-6/1.7.

3.15 End Attachments

The ends of deck girders and transverses are to be effectively attached by welding.

3.17 Hatch-end Beams

Each hatch-end beam, similar to that shown in 3-2-6/Figure 2, which is supported by a centerline pillar without a pillar at the corner of the hatchway, is to have a section modulus, *SM*, not less than that obtained from the following equations:

3.17.1 Where Deck Hatch-side Girders are Fitted Fore and Aft Beyond the Hatchways

$$SM = K(AB + CD)h\ell \text{ cm}^3$$

$$SM = 0.000527K(AB + CD)h\ell \text{ in}^3$$

3.17.2 Where Girders are not Fitted on the Line of the Hatch Side Beyond the Hatchway

$$SM = KABh\ell \text{ cm}^3$$

$$SM = 0.000527KABh\ell \text{ in}^3$$

where

A	=	length of the hatchway, in m (ft)
B	=	distance from the centerline to the midpoint between the hatch side and the line of the toes of the beam knees, in m (ft)
C	=	distance from a point midway between the centerline and the line of the hatch side to the midpoint between the hatch side and the line of the toes of the beam knees, in m (ft). Where no girder is fitted on the centerline beyond the hatchway, C is equal to B
D	=	distance from the hatch-end beam to the adjacent hold bulkhead, in m (ft)
h	=	height for the beams of the deck under consideration, as given in 3-2-6/1.3, in m (ft)
ℓ	=	distance from the toe of the beam knee to the centerline plus 0.305 m (1 ft), in m (ft)
K	=	$2.20 + 1.29(F/N)$ when $F/N \le 0.6$
K	=	$4.28 - 2.17\,(F/N)$ when $F/N > 0.6$
N	=	one-half the breadth of the vessel in way of the hatch-end beam
F	=	distance from the side of the vessel to the hatch-side girder

Weather deck hatch-end beams which have deep coamings above deck for the width of the hatch may have the flange area reduced from a point well within the line of the hatch side girder to approximately 50% of the required area at centerline; in such cases, it is recommended that athwartships brackets be fitted above deck at the ends of the hatch-end coaming.

Brackets at the end of hatch-end beams are to be generally as described in 3-1-2/5.5. Where brackets are not fitted, the length, ℓ, is to be measured to the side of the vessel and the face plates or flanges on the beams are to be attached to the shell by heavy horizontal brackets extending to the adjacent frame.

FIGURE 2
Hatch-end Beams

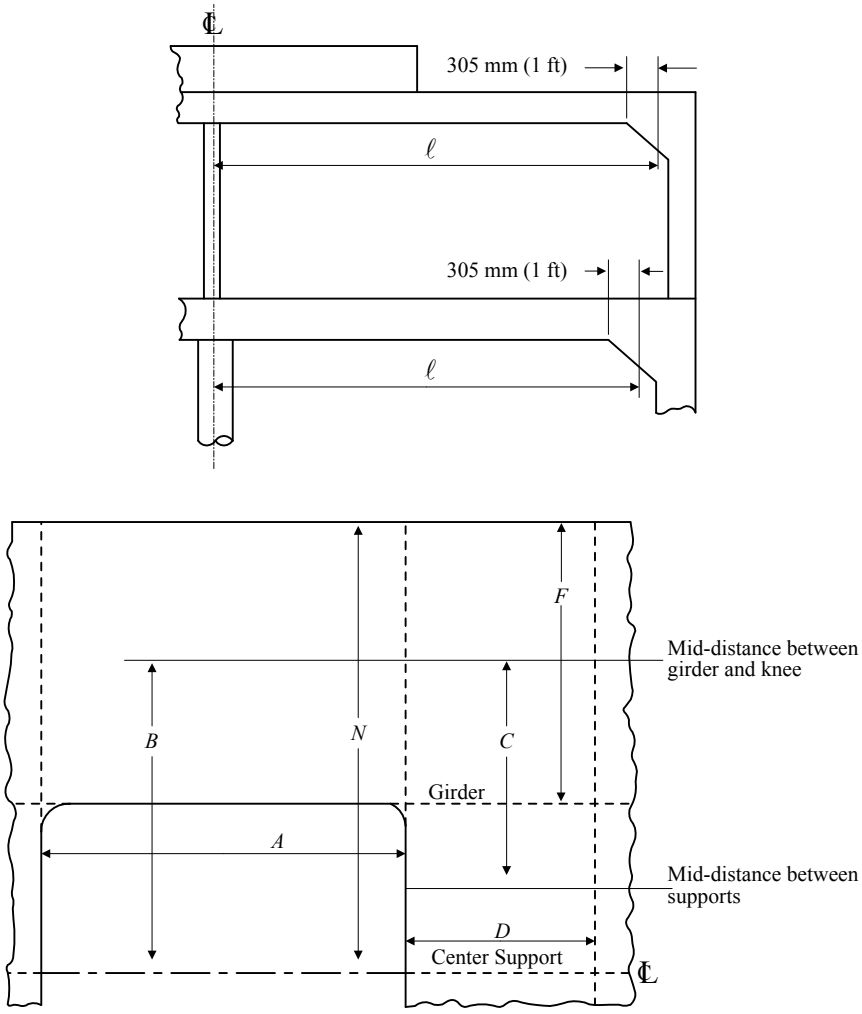

5 Stanchions and Pillars

5.1 General

Supports under pillars are to be sufficient strength to distribute the loads effectively. Tween-deck pillars are to be arranged directly above those below, or effective means are to be provided for transmitting their loads to supports below. Tripping brackets are to be fitted on members in way of pillars, both when the pillar is over and under the member.

5.3 Permissible Load

The permissible load a pillar can carry is to be equal to or greater than the pillar load, *W,* as determined in 3-2-6/5.5. The permissible load may be obtained from the following equation:

$$W_a = (k - n\ell/r)A$$

where

W_a	=	load in kN (tf, Ltf)
k	=	12.09 (1.232, 7.83)
n	=	0.0444 (0.00452, 0.345)
ℓ	=	the unsupported length of the pillar, in cm (ft)
r	=	least radius of gyration of pillar, in cm (in.)
A	=	area of pillar, in cm^2 (in^2)

5.5 Calculated Load

The load on a pillar is to be obtained from the following equation:

$$W = nbhs$$

where

W	=	load, in kN (tf, Ltf)
n	=	7.04 (0.715, 0.02)
b	=	mean breadth, in m (ft), of area supported
h	=	height, in m (ft), above the deck supported, as defined below
s	=	mean length, in m (ft), of area supported

For a pillar below an exposed deck on which cargo is carried, *h* is the distance from the deck supported to a point 3.66 m (12 ft) above the exposed deck. Where it is intended to carry deck cargoes in excess of 2636 kilograms per square meter (540 pounds per square foot), this head is to be increased in proportion to the added loads which will be imposed on the structure.

For a pillar below the freeboard deck, *h* is to be measured to a point not less than 0.02*L* + 0.76 m (0.02*L* + 2.5 ft) above the freeboard deck.

For a pillar below the superstructure deck, *h* is to be measured to a point not less than 0.02*L* + 0.46 m (0.02*L* + 1.5 ft) above the superstructure deck.

The height, *h,* for any pillar is not to be less than the given height in 3-2-6/1.3 for the beams at the top of the pillar plus the sum of the heights given in the same paragraphs for the beams of all complete cargo decks and one-half the heights given for all partial superstructure decks above.

L is the length of vessel, in m (ft), as defined in 3-1-1/3.

5.7 Stanchions in Double Bottoms and Under Tank Tops

Stanchions in double bottoms and under the tops of deep tanks are to be solid in cross section. Stanchions under the tops of deep tanks are not to be less than required by 3-2-6/5.3 and 3-2-6/5.5, nor are they to have less section area than cW cm^2 (in^2) where W is to be obtained from the following equation:

$$W = nbhs$$

where

W = load, in kN (tf, Ltf)

n = 10.5 (1.07, 0.03)

b = breadth, in m (ft), of the area of the top of the tank supported by the stanchion

h = height, in m (ft), as required by 3-2-6/1.3, for the tank-top beams

s = length, in m (ft), of the area of the top of the tank supported by the stanchion

c = 0.1035 (1.015, 0.16)

5.9 Bulkheads

Bulkheads supporting girders or bulkheads fitted in lieu of girders are to be stiffened to provide supports not less effective than required for pillars.

5.11 Attachments

Wide-spaced tubular or solid pillars are to bear solidly at head and heel and are to be attached by welding, properly proportioned to the size of the pillar. The attachments of stanchions or pillars under bulkhead recesses, tunnel tops or deep-tank tops which may be subjected to tension loads are to be specially developed to provide sufficient welding to withstand the tension load.

7 Higher-strength Materials

7.1 General

In general, applications of higher-strength materials for deck beams, girders and transverses are to meet the requirements of this section, but may be modified as permitted by the following paragraph.

Calculations are to be submitted to show adequate provision against buckling. Longitudinal members are to be of essentially the same material as the plating they support.

7.3 Beams, Girders and Transverses of Higher-strength Materials

Each beam, girder and transverse of higher-strength material, in association with the higher-strength plating to which it is attached, is generally to comply with the requirements of the appropriate preceding paragraphs of this section and is to have a section modulus, $SM_{hts,}$ not less than obtained from the following equation:

$$SM_{hts} = SM(Q)$$

where

SM = required section modulus in ordinary-strength material, as determined elsewhere in this section.

Q = as defined in 3-2-1/7.5

PART

3

CHAPTER **2 Hull Structures and Arrangements**

SECTION **7 Watertight Bulkheads and Doors**

1 General

All vessels having lengths, *L*, equal to or exceeding 15 m (50 ft) are to be provided with watertight bulkheads in accordance with this section. The plans submitted are to clearly show the location and extent of each watertight bulkhead. Watertight bulkheads constructed in accordance with the Rules will be recorded in the *Record* as **WT** (watertight), the symbols being prefixed in each case by the number of such bulkheads.

1.1 Openings and Penetrations *(2006)*

The number of openings in watertight subdivisions is to be kept to a minimum, compatible with the design and proper working of the vessel. Where penetrations of watertight bulkheads and internal deck are necessary for access, piping, ventilation, electrical cables, etc., arrangements are to be made to maintain the watertight integrity. Relaxation in the watertightness of openings above the freeboard deck may be considered, provided it is demonstrated that any progressive flooding can be easily controlled and that the safety of the vessel is not impaired.

Ventilation penetrations through watertight subdivision bulkheads are to be avoided. Where penetrations are unavoidable, the ventilation ducting is to satisfy watertight bulkhead requirements or watertight closing appliances are to be installed at the bulkhead penetrations. For ventilation penetrations below the bulkhead deck or below damage equilibrium waterlines, the closing appliances are to be operable from the bridge. Otherwise, local, manual controls may be provided.

3 Arrangement of Watertight Bulkheads

3.1 Collision Bulkheads

3.1.1 General

A collision bulkhead is to be fitted on all vessels. It is to be intact, that is, without openings, except as permitted in 4-4-1/9.11. It is to extend, preferably in one plane, to the freeboard deck. In the case of vessels having long superstructures at the fore end, it is to be extended weathertight to the superstructure deck. The extension need not be fitted directly over the bulkheads below, provided the location of the extension meets the following requirements and the part of the deck which forms the step is made effectively weathertight.

On vessels with bow-doors, that part of their sloping loading ramps that form part of the extension of a collision bulkhead and are more than 2.3 m (7.5 ft) above the freeboard deck may extend forward of the limit below.

Collision bulkhead requirements for passenger vessels are as indicated in the ABS *Guide for Building and Classing Passenger Vessels (Passenger Vessel Guide)*.

3.1.2 Location

The collision bulkhead is to be located at any point not less than $0.05L_f$ abaft the reference point. At no point on vessels having 500 or more gross tonnage, except as specially permitted, is it to be further than $0.08L_f$ from the reference point.

3.1.3 Reference Point

The reference point in determining the location of the collision bulkhead is the forward end of L_f, except that in the case of vessels having any part of the underwater body, such as the bulbous bow, extending forward of the forward end of L_f, the required distances are to be measured from a reference point located a distance forward of the forward end of L_f. This distance, x is the lesser of the following (see 3-2-7/Figure 1):

i) Half the distance between the forward end of L_f and the extreme forward end of the extension, $p/2$ or

ii) $0.015L_f$

iii) 3 m (9.84 ft)

where L_f is as defined in 3-1-1/3.3.

The forward end of L_f is to coincide with the fore side of the stem on the waterline at which L_f is measured.

FIGURE 1
Reference Point of Vessels with Bulbous Bow

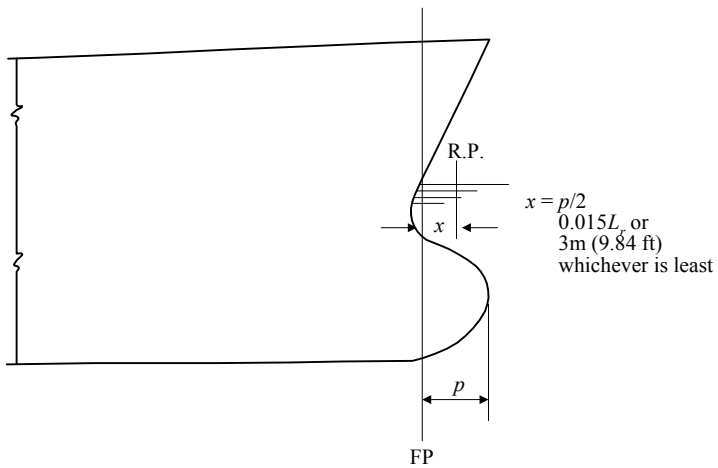

3.3 Engine Room

The engine room is to be enclosed by watertight bulkheads extending to the freeboard deck.

3.5 Chain Lockers *(2007)*

For vessels with freeboard length, L_f, (as defined in 3-1-1/3.3) greater than 24 meters (79 feet), chain lockers and chain pipes are to be made watertight up to the weather deck. The arrangements are to be such that accidental flooding of the chain locker cannot result in damage to auxiliaries or equipment necessary for the proper operation of the vessel nor in successive flooding into other spaces. Bulkheads between separate chain lockers not forming a part of subdivision bulkhead (* see 3-2-7/Figure 1A below), or bulkheads which form a common boundary of chain lockers (see 3-2-7/Figure 1B below), need not be watertight.

Where means of access into chain lockers are provided, they are to be closed by a substantial cover secured by closely spaced bolts. Doors are not permitted.

For closure of chain pipes, see 3-2-12/23.7.

The arrangements on vessels that are not subject to the International Convention on Load Lines or its Protocol may be specially considered.

FIGURE 1A *(2007)*

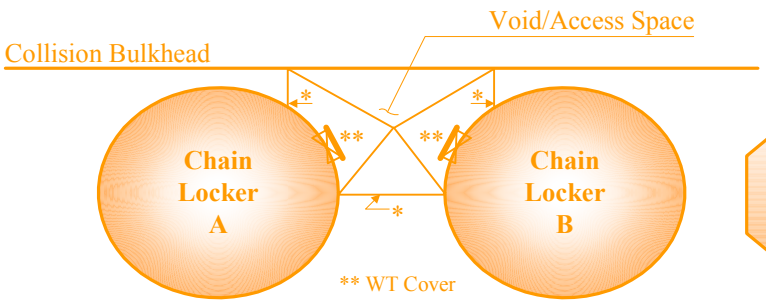

FIGURE 1B *(2007)*

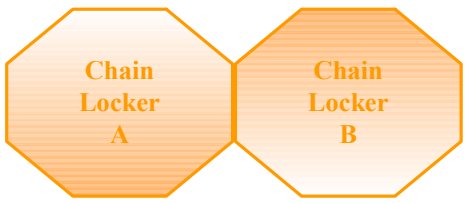

3.7 Hold Bulkheads *(1 July 1998)*

In addition to the above required bulkheads, for vessels of applicable type and size, the number and arrangement of hold bulkheads are to satisfy the subdivision and damage requirements in 3-3-1/3.3. Review procedures for this requirement are indicated in 3-3-1/5.

5 Construction of Watertight Bulkheads

5.1 Plating *(1998)*

Watertight bulkhead plating thickness is to be obtained from the following equation:

$t = sk\sqrt{qh}/c + 1.5$ mm but not less than 6 mm or $s/200 + 2.5$ mm, whichever is greater

$t = sk\sqrt{qh}/c + 0.06$ in. but not less than 0.24 in. or $s/200 + 0.10$ in., whichever is greater

where

t = thickness, in mm (in.)

s = spacing of stiffeners, in mm (in.)

k = $(3.075\sqrt{\alpha} - 2.077)/(\alpha + 0.272)$ $(1 \le \alpha \le 2)$

= 1.0 $(\alpha > 2)$

α = aspect ratio of the panel (longer edge/shorter edge)

q = $235/Y$ N/mm^2 ($24/Y$ kgf/mm^2, $34{,}000/Y$ psi)

Y = specified minimum yield point or yield strength, in N/mm^2 (kgf/mm^2, psi), as defined in 2-1-1/13, for the higher strength material or 72% of the specified minimum tensile strength, whichever is less

h = distance from the lower edge of the plate to the deepest equilibrium waterline in the one compartment damaged condition, in m (ft)

- For passenger vessels, h is to be taken as not less than the distance to the margin line.
- For cargo vessels, h is to be not less than the distance to the bulkhead deck at center unless a deck lower than the uppermost continuous deck is designated as the freeboard deck, as allowed in 3-1-1/13.1, in which case, h is to be not less than the distance to the designated freeboard deck at center.

c = 254 (460) for collision bulkhead

= 290 (525) for other watertight bulkheads

For vessels under 30.5 m (100 ft) in length, the following deductions may be made to the thicknesses obtained from the above equation for mild steel only.

L *meters*	*Deduction* *mm*	*L* *feet*	*Deduction* *in.*
24.40 to 30.50	0.25	80 to 100	0.01
21.35 to 24.40	0.50	70 to 80	0.02
18.30 to 21.35	0.75	60 to 70	0.03
Under 18.30	1.00	Under 60	0.04

In general, main non-tight transverse strength bulkhead plating is to be similar to that required for watertight bulkheads. Other non-tight strength bulkheads plating is to be not less than $s/150$, or 4 mm (0.16 in.), whichever is greater. The section modulus of non-watertight bulkhead stiffeners is to be not less than one-half of that required by 3-2-7/5.3.

5.3 Stiffeners *(1998)*

The section modulus, SM of each bulkhead stiffener, in association with the plating to which it is attached, is to be not less than that obtained from the following equation:

$$SM = 7.8chs\ell^2 \text{ cm}^3$$

$$SM = 0.0041chs\ell^2 \text{ in}^3$$

where

c = 0.30 for a stiffener with effective brackets at both ends of its span. An effective bracket for the application of this value of c is to have scantlings not less than shown in 3-1-2/Table 3 and is to extend onto the stiffener for a distance at least one-eighth of the length, ℓ, of the stiffener.

= 0.43 for a stiffener with an effective bracket at one end and a clip connection or horizontal girder at the other end. An effective bracket for the application of this value of c is to have scantlings not less than shown in 3-1-2/Table 3 and is to extend onto the stiffener for a distance at least one-eighth of the length, ℓ, of the stiffener.

c = 0.56 for a stiffener with clip connections at both ends or a clip connection at one end and a horizontal girder at the other end.

= 0.60 for a stiffener between horizontal girders or for a stiffener with no end attachments.

h = distance from the middle of ℓ to the deepest equilibrium waterline in the one compartment damaged condition, in m (ft)

- For passenger vessels, h is to be taken as not less than the distance to the margin line.
- For cargo vessels, h is to be taken as not less than the distance to the bulkhead deck at center unless a deck lower than the uppermost continuous deck is designated as the freeboard deck, as allowed in 3-1-1/13.1, in which case, h is to be not less than the distance to the designated freeboard deck at center.
- For all vessels, where this distance is less than 6.10 m (20 ft), h is to be taken as 0.8 times the distance plus 1.22 m (4 ft).

s = spacing of stiffeners, in m (ft)

ℓ = distance, in m (ft), between the heels of the end attachments. Where horizontal girders are fitted, ℓ is the distance from the heel of the end attachment to the first girder, or the distance between the horizontal girders.

In vessels under 46 meters (150 ft) in length, the above values for c may be 0.29, 0.38, 0.46 and 0.58, respectively, and h may be taken as the distance in meters or in feet from the middle of ℓ to the bulkhead deck at center in every case. For vessels between 46 and 65.5 meters (150 and 215 feet), intermediate values for c may be obtained by interpolation.

The section modulus of stiffeners on collision bulkheads is to be increased by 25% over the section modulus of stiffeners on ordinary watertight bulkheads.

5.5 Girders and Webs *(1998)*

Each horizontal girder or vertical web supporting bulkhead stiffeners is to have a section modulus, SM, not less than that obtained from the following equation:

$$SM = 4.74chs\ell^2 \text{ cm}^3$$

$$SM = 0.0025chs\ell^2 \text{ in}^3$$

where

c = 1.0

h = vertical distance, in m (ft), to the deepest equilibrium waterline in the one compartment damaged condition from the middle of s in the case of a horizontal girder or from the middle of ℓ in the case of a vertical web.

- For passenger vessels, h is to be taken as not less than the distance to the margin line.
- For cargo vessels, h is to be not less than the distance to the bulkhead deck at center unless a deck lower than the uppermost continuous deck is designated as the freeboard deck, as allowed in 3-1-1/13.1, in which case, h is to be not less than the distance to the designated freeboard deck at center.
- For all vessels, where this distance is less than 6.10 m (20 ft), h is to be taken as 0.8 times the distance plus 1.22 m (4 ft).

s = sum of half lengths, in m (ft), (on each side of the girder or web) of the stiffeners supported by the girder or web

ℓ = unsupported span of girder or web, in m (ft). Where brackets are fitted in accordance with 3-1-2/5.5, the length, ℓ, may be measured as permitted therein.

The required section modulus of girders or webs on collision bulkheads are to be increased by 25% over the required section modulus of girders or webs on ordinary bulkheads. The depth of a girder or web is not to be less than twice the depth of the cutout unless effective compensation is provided for stiffener cutouts. Tripping brackets are to be fitted at intervals of about 3 m (10 ft), and stiffeners are to be fitted as may be required.

Lower brackets to inner bottoms are to extend over the floor adjacent to the bulkhead. Where stiffeners cross horizontal girders, they are to be effectively attached.

5.7 Corrugated Bulkheads

5.7.1 Plating

The plating of corrugated bulkheads is to be of the thickness required by 3-2-7/5.1 with the following modification. The spacing to be used is the greater of dimensions a or c, as indicated in 3-2-7/Figure 2. The angle ϕ is to be 45 degrees or more.

5.7.2 Stiffeners

The section modulus, SM, for a corrugated bulkhead is to be not less than that obtained from the following equation:

$$SM = 7.8chs\ell^2 \text{ cm}^3$$

$$SM = 0.0041chs\ell^2 \text{ in}^3$$

where

ℓ = distance between supporting members, in m (ft)

s = $a + b$, where a and b are as defined in 3-2-7/Figure 2, in m (ft)

c = 0.56

h = as defined in 3-2-7/5.3

The developed section modulus, SM, may be obtained from the following equation, where a, t, and d are as indicated in 3-2-7/Figure 2.

$$SM = td^2/6 + (adt/2)$$

FIGURE 2
Corrugated Bulkhead

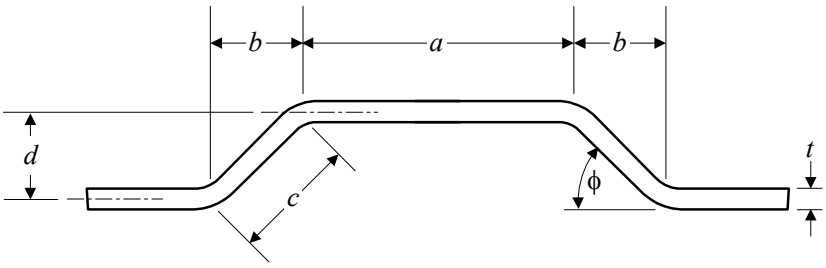

5.7.3 End Connections

The structural arrangements and size of welding at the ends of corrugations are to be designed to develop the required strength of corrugation stiffeners. Joints within 10% of the depth of corrugation from the outer surface of corrugation, d_1, are to have double continuous welds with fillet size, *w,* not less than 0.7 times the thickness of the bulkhead plating or penetration welds of equal strength (3-2-7/Figure 3). See also 3-2-16/3.

FIGURE 3
Corrugated Bulkhead End Connections

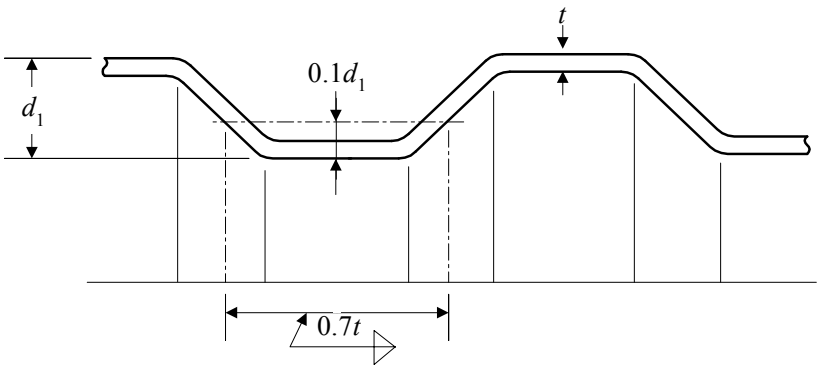

7 Watertight Doors

7.1 Vessels Requiring Subdivision and Damage Stability

7.1.1 Doors Used While at Sea *(2002)*

Doors which are used while at sea are to be sliding watertight doors capable of being remotely closed from the bridge and are also to be operable locally from each side of the bulkhead. Indicators are to be provided at the control position showing whether the doors are open or closed, and an audible alarm is to be provided which is to sound whenever the door is closed remotely by power. The power-operated doors, control systems and indicators are to be functional in the event of main power failure. Particular attention is to be paid to minimize the effect of control system failure. Each power-operated sliding watertight door is to be provided with an individual hand-operated mechanism. It is to be possible to open and close the door by hand at the door itself from each side. For vessels less than 80 m (262.4 ft) in length (L_f as defined in 3-1-1/3.3), hinged quick-acting doors, operable from both sides of the door, are permitted above a deck, the molded line of which at its lowest point at side, is at least 2.14 m (7 ft) above the deepest load line. Hinged quick-acting doors, operable from both sides, are also permitted for vessels less than 80 m (262.4 ft) in length, L_f, in way of inboard compartments that are not within the assumed extent of damage that may be applicable to the vessel.

7.1.2 Access Doors Normally Closed at Sea

Access doors and access hatch covers normally closed at sea may be substantially constructed hinged type, fitted with gaskets and dogs, spaced and designed to ensure that the opening may be closed thoroughly watertight. These closing appliances are to be provided with means of indicating locally and on the bridge whether they are open or closed. A notice is to be affixed to each closing appliance to the effect that it is not to be left open.

7.1.3 Doors or Ramps Dividing Large Cargo Spaces

Watertight doors or ramps of satisfactory construction may be fitted to internally subdivide large cargo spaces, provided it is demonstrated to the Bureau that such doors or ramps are essential.

These doors or ramps may be hinged, rolling, or sliding doors or ramps, but are not to be remotely controlled. Such doors or ramps may be approved on condition that they be closed by the shipboard personnel before the voyage commences and kept closed during navigation and that the time of opening such doors or ramps in port and of closing them before the vessel leaves port is to be entered in the log book.

Doors or ramps accessible during the voyage are to be fitted with a device which prevents unauthorized opening.

7.1.4 Other Openings Closed at Sea

Closing appliances which are kept permanently closed at sea to ensure the watertight integrity of internal openings in watertight bulkheads and decks and are not fitted with a device which prevents unauthorized opening are to be provided with a notice affixed to each such closing appliance to the effect that it is to be kept closed. Manholes fitted with closely bolted covers need not be so marked.

7.3 Other Vessels

Watertight doors may be installed in all watertight bulkheads, except collision bulkheads.

7.5 Construction

Watertight doors are to be of ample strength for the water pressure to which they may be subjected. Door frames are to be carefully fitted to the bulkheads; where liners are required, the material is to be not readily injured by heat or by deterioration. Sliding doors are to be carefully fitted to the frames and are to be tested at the maker's works.

Where stiffeners are cut in way of watertight doors, the openings are to be framed and bracketed to maintain the full strength of the bulkheads without taking the strength of the door frames into consideration.

9 Testing

Requirements for testing are contained in Section 3-7-1.

PART

3

CHAPTER **2 Hull Structures and Arrangements**

SECTION **8 Deep Tanks**

1 General Arrangement

The arrangement of all deep tanks, their intended service, and the heights of the overflow pipes are to be clearly indicated on the drawings submitted for approval. Tanks forward of the collision bulkhead are not to be arranged for the carriage of oil or other flammable or combustible substances.

3 Construction

Boundary bulkheads and tight divisions of all deep tanks are to be constructed in accordance with the requirements of this section where they exceed those of Section 3-2-7. Where the specific gravity of the liquid exceeds 1.05, the design head, h, in this section is to be increased by the ratio of the specific gravity of 1.05.

5 Construction of Deep-tank Bulkheads

5.1 Plating

The minimum thickness of deep-tank boundary bulkheads and tight divisions is to be obtained from the following equation:

$t = (sk\sqrt{qh}/254) + 2.5$ mm — but not less than 6.5 mm or $s/150 + 2.5$ mm, whichever is greater

$t = (sk\sqrt{qh}/460) + 0.10$ in. — but not less than 0.25 in. or $s/150 + 0.10$ in., whichever is greater

where

t = thickness, in mm (in.)

s = stiffener spacing, in mm (in.)

k = $(3.075\sqrt{\alpha} - 2.077)/(\alpha + 0.272)$ $(1 \le \alpha \le 2)$

= 1.0 $(\alpha > 2)$

α = aspect ratio of the panel (longer edge/shorter edge)

q = $235/Y$ N/mm^2 ($24/Y$ kgf/mm^2, $34{,}000/Y$ psi)

Y = as defined in 3-2-7/5.1

h = the greatest of the following distances, in m (ft), from the lower edge of the plate to:

- A point located at two-thirds of the distance to the bulkhead or freeboard deck, or
- A point located at two-thirds the distance from the top of the tank to the top of the overflow, or
- The load line, or
- A point located above the top of the tank, not less than the greater of the following:
- $0.01L + 0.15$ m (0.5 ft), where L is as defined in 3-1-1/3, or 0.46 m (1.5 ft)

5.3 Stiffeners

The section modulus, SM, of each deep-tank stiffener, in association with the plating to which it is attached, is not to be less than that obtained from the following equation:

$$SM = 7.8chs\ell^2 \text{ cm}^3$$

$$SM = 0.0041chs\ell^2 \text{ in}^3$$

where

c = 0.594 for stiffeners having effective bracket attachments at both ends. An effective bracket for the application of this value of c is to have scantlings not less than shown in 3-1-2/Table 2 and is to extend onto the stiffener for a distance at least one-eighth of the length, ℓ, of the stiffener.

= 0.747 for stiffeners having an effective bracket attachment at one end and a clip connection or horizontal girder at the other end. An effective bracket for the application of this value of c is to have scantlings not less than shown in 3-1-2/Table 2 and is to extend onto the stiffener for a distance at least one-eighth of the length, ℓ, of the stiffener.

= 0.90 for stiffeners having clip connections at both ends or having such attachments at one end and horizontal girders at the other end.

= 1.00 for stiffeners having horizontal girders at both ends.

ℓ = the distance, in m (ft), between the heels of the end attachments. Where horizontal girders are fitted, ℓ is the distance from the heel of the end attachment to the first girder or the distance between the horizontal girders.

s = stiffener spacing, in m (ft)

h = the greatest of the following distances, in m (ft), from the middle of ℓ to:

- A point located at two-thirds of the distance from the middle of ℓ to the bulkhead or freeboard deck, or
- A point located at two-thirds of the distance from the top of the tank to the top of the overflow, or
- The load line, or
- A point located above the top of the tank, not less than the greater of the following:
- $0.01L + 0.15$ m (0.5 ft), where L is the length of a vessel as defined in 3-1-1/3, or 0.46 m (1.5 ft)

5.5 Corrugated Bulkheads

Where corrugated bulkheads are used as deep-tank boundaries, the scantlings may be developed from 3-2-7/5.7. The plating thickness, *t,* and value of *SM* are to be as required by 3-2-8/5.1 and 3-2-8/5.3, respectively, with $c = 0.90$.

5.7 Girders and Webs

Horizontal girders or vertical webs supporting bulkhead stiffeners in deep tanks are to have a section modulus as required by this paragraph. Girders or webs supporting frames or beams in deep tanks are to have section modulus as required by Sections 3-2-5 and 3-2-6, respectively, or as required by this paragraph, whichever is the greater. The section modulus, *SM*, of each girder or web is not to be less than that obtained from the following equation:

$$SM = 4.74chs\ell^2 \text{ cm}^3$$

$$SM = 0.0025chs\ell^2 \text{ in}^3$$

where

c = 1.5

h = vertical distance, in m (ft), from the middle of s in the case of a girder or from the middle of ℓ in the case of a web to the same heights to which h for the stiffeners is measured (see 3-2-8/5.3)

s = sum of half lengths, in m (ft) (on each side of the girder or web), of the frames or stiffeners supported by the girder or web.

ℓ = unsupported length of girder or web, in m (ft). Where brackets are fitted in accordance with 3-1-2/5.5, the length, ℓ, may be measured as permitted therein.

The depth of a girder or web is not to be less than 2.5 times the depth of the cutout unless effective compensation is provided for stiffener cutouts. The thickness is to be not less than 1 mm per 100 millimeters (0.01 inch per inch) of depth plus 3 mm (0.12 in.). Tripping brackets are to be fitted at intervals of about 3 m (10 ft) and stiffeners are to be fitted as may be required.

7 Tank Top Plating

Tops of tanks are to have plating 1 mm (0.04 in.) thicker than would be required for vertical plating at the same level. The thickness is not to be less than required for deck plating. Beams, girders and pillars are to be as required by Section 3-2-6.

9 Higher-strength Materials

9.1 General

In general, applications of higher-strength materials for deep-tank plating are to meet the requirements of this section, but may be modified as permitted by the following paragraphs. Calculations are to be submitted to show adequate provision to resist buckling.

9.3 Plating

Deep-tank plating of higher-strength material is to be of not less thickness than that obtained by 3-2-8/5.1.

9.5 Stiffeners

Each stiffener of higher-strength material, in association with the higher-strength plating to which it is attached, is to have section modulus, SM_{hts}, not less than that obtained from the following equation:

$$SM_{hts} = 7.8chs\ell^2Q \text{ cm}^3$$

$$SM_{hts} = 0.0041chs\ell^2Q \text{ in}^3$$

c, h, s and ℓ are as defined in 3-2-8/5.3 and Q is as defined in 3-2-1/7.5.

11 Drainage and Air Escape

Limber and air holes are to be cut, as required, in non-tight parts of the tanks to ensure the free flow of liquids to the suction pipes and the escape of air to the vents. Arrangements are to be made for draining the tops of the tanks.

13 Testing

Requirements for testing are contained in Section 3-7-1.

PART

3

CHAPTER **2** **Hull Structures and Arrangements**

SECTION **9** **Superstructures and Deckhouses**

1 Superstructure Scantlings

1.1 Side and Top Plating

The thickness of superstructure side plating is to be not less than that obtained from the requirements of 3-2-2/5. The thickness is also not to be less than that required by 3-2-9/3.5 for exposed aft-end bulkheads. Superstructure top plating is to be in accordance with Section 3-2-3.

1.3 Framing and Internal Bulkheads

Superstructure side frames are to be in accordance with 3-2-5/5.3. Bulkheads, partial bulkheads or web frames are to be fitted in the superstructure over the main hull bulkheads and elsewhere, as may be required to give effective transverse rigidity.

1.5 Breaks in Continuity

Breaks in the continuity of superstructures are to be specially strengthened (See 3-2-2/13). The arrangements in this area are to be clearly shown on the plans submitted for approval. Openings and changes in the scantlings of the decks and shell are to be kept well clear of the breaks.

1.7 Structural Support

Main bulkheads in the hull are to be arranged to provide support under the ends of the superstructures.

3 Exposed Bulkheads of Superstructures and Deckhouses

3.1 General

The scantlings of the exposed bulkheads of superstructures and deckhouses are to be in accordance with the following paragraphs, except that the requirements for house side stiffeners need not exceed the requirements of Section 3-2-5 for the side frames directly below the deck on which the house is located.

Special consideration may be given to the bulkhead scantlings of deckhouses which do not protect openings in the freeboard deck, superstructure deck or in the top of a lowest tier deckhouse or which do not protect machinery casings, provided they do not contain accommodation or do not protect equipment essential to the operation or safety of the vessel.

Superstructures or deckhouses located within the midship 0.4L that have lengths greater than 0.1L are to have effective longitudinal scantlings to give a hull-girder section modulus through the superstructure or deckhouse meeting the requirements for the main hull-girder. The superstructure scantlings are to be in accordance with 3-2-9/1 and the house top and side plating of long deckhouses are to be not less than 0.009s + 0.8 mm (0.009s + 0.032 in.) where s is the spacing of the deck beams in mm (in.).

Partial bulkheads, deep webs, etc. are to be fitted at the ends and sides of large superstructures or deckhouses to provide resistance to racking.

In general, the first or lowest tier is that located on the freeboard deck. Where the depth to the uppermost continuous weather deck is such that the freeboard to this deck exceeds tabular freeboard by at least one standard superstructure height, deckhouses and superstructures on this weather deck may be considered second tier. Watertight bulkheads are to extend to this weather deck. This consideration of excess freeboard may be followed in a similar manner to determine third tier deckhouses or superstructures.

3.3 Stiffeners

Each stiffener, in association with the plating to which it is attached, is to have section modulus, *SM,* not less than that obtained from the following equation:

$$SM = 3.5 s \ell^2 h \text{ cm}^3$$

$$SM = 0.00185 s \ell^2 h \text{ in}^3$$

where

s = stiffener spacing, in m (ft)

ℓ = tween deck height or unsupported length, in m (ft)

h = $a[(bf) - y]c$, design head in m (ft). For unprotected front bulkheads on the lowest tier, h is to be taken as not less than 9.9 m (32.5 ft), and for sides and ends of first tier, h is to be taken as not less than 3.3 m (10.8 ft). For all other bulkheads the minimum value of h is to be not less than 1.25 + L/200 m (4.1 + L/200 ft).

a = coefficient given in 3-2-9/Table 1.

b = $1.0 + \left[\dfrac{(x/L) - 0.45}{C_b + 0.2}\right]^2$ where $(x/L) \le 0.45$

b = $1.0 + 1.5\left[\dfrac{(x/L) - 0.45}{C_b + 0.2}\right]^2$ where $(x/L) > 0.45$

C_b = block coefficient at summer load waterline, based on the vessel's length, L, as defined in 3-1-1/3, not to be taken less than 0.60 nor greater than 0.80. For aft end bulkheads forward of amidships, C_b need not be taken as less than 0.80.

x = distance, in m (ft), between the after perpendicular and the bulkhead being considered. Deckhouse side bulkheads are to be divided into equal parts not exceeding 0.15L in length, and x is to be measured from the after perpendicular to the center of each part considered.

L = length of vessel, as defined in 3-1-1/3, in m (ft)

f = $(L/10)(e^{-L/300}) - [1 - (L/150)^2]$ for L, in m, see also 3-2-9/Table 2

$(L/10)(e^{-L/984}) - [3.28 - L/272)^2]$ for L, in ft, see also 3-2-9/Table 2

y = vertical distance, in m (ft), from the summer load waterline to the midpoint of the stiffener span.

c = $(0.3 + 0.7b_1/B_1)$, but is not to be taken as less than 1.0 for exposed machinery casing bulkheads. In no case is b_1/B_1 to be taken as less than 0.25.

b_1 = breadth of deckhouse at position being considered, in m (ft)

B_1 = actual breadth of vessel at the freeboard deck at the position being considered, in m (ft)

Where windows are fitted in bulkheads, the spacing, s, is to be the spacing of the mullion stiffeners. The mullion stiffeners are to extend continuously from deck to deck.

TABLE 1
Values of a

Bulkhead Location	*Metric Units*	*US Units*
Unprotected front Lowest tier	$2.0 + L/120$	$2.0 + L/393.6$
Unprotected front Second tier	$1.0 + L/120$	$1.0 + L/393.6$
Unprotected front Third tiers	$0.5 + L/150$	$0.5 + L/492$
Protected front All tiers	$0.5 + L/150$	$0.5 + L/492$
Sides, All tiers	$0.5 + L/150$	$0.5 + L/492$
Aft ends, aft of amidships, All tiers	$0.7 + (L/1000) – 0.8x/L$	$0.7 + (L/3280) – 0.8x/L$
Aft ends, forward of amidships, All tiers	$0.5 + (L/1000) – 0.4x/L$	$0.5 + (L/3280) – 0.4x/L$

TABLE 2
Values of f

Intermediate values of f may be obtained by interpolation

SI and MKS Units	
L, m	*f*
24	1.24
40	2.57
60	4.07
80	5.41
90	6.00

US Units	
L, ft	*f*
79	4.09
130	8.34
200	13.6
250	17.0
295	19.8

3.5 Plating

The plating is to be not less in thickness than that obtained from the following equation:

$$t = 3s\sqrt{h} \quad \text{mm}$$

$$t = s\sqrt{h}/50 \quad \text{in.}$$

where

s and h are as defined in 3-2-9/3.3 above. When determining h, y is to be measured to the middle of the panel.

In no case is the thickness for bulkheads, other than the lowest tier, to be less than 5.0 mm (0.20 in.).

In addition, the thicknesses are to be not less than the following:

For the lowest tier and for deckhouses on the forecastle deck:

For front bulkheads:

$t = (s/0.60)(6 + 0.02L)$ mm

$t = (s/1.97)(0.24 + 0.00024L)$ in.

For side and end bulkheads:

$t = (s/0.60)(5 + 0.02L)$ mm

$t = (s/1.97)(0.20 + 0.00024L)$ in.

Where L is as defined in 3-2-9/3.3 and s is as defined in 3-2-9/3.3, but is not to be taken less than 0.60 m (1.97 ft).

3.7 End Attachments

The upper and lower ends of all lowest tier bulkheads stiffeners, of all bulkhead stiffeners of the tier on the forecastle deck and of all unprotected front bulkhead stiffeners are to be effectively attached. The end attachments are to be formed by end brackets, by welding the webs all around to the deck plating or by lapping the stiffener onto the deck beam.

The ends of all transverse webs in way of girders or transverses are to be welded.

Where only the webs are welded, the flange or face bar is to be sniped not more than 30°.

The webs of all the bulkhead stiffeners may be sniped, having due regard to their scantlings and the depth of the web.

3.9 Raised-quarter-deck Bulkheads

Raised-quarter-deck bulkheads are to have plating of not less thickness than required for unprotected front bulkheads.

The sizes of stiffeners are to be specially considered on the basis of the length of the vessel, the actual height of the raised quarter deck and the arrangement of the structure.

5 Enclosed Superstructures

5.1 Closing Appliances

All openings in the bulkheads of enclosed superstructures are to be provided with efficient means of closing, so that in any sea conditions, water will not penetrate the vessel. Opening and closing appliances are to be framed and stiffened so that the whole structure, when closed, is equivalent to the unpierced bulkhead.

Doors for access openings into enclosed superstructures are to be of steel or other equivalent material, permanently and strongly attached to the bulkhead. The doors are to be provided with gaskets and clamping devices, or other equivalent arrangements, permanently attached to the bulkhead or to the doors themselves, and the doors are to be so arranged that they can be operated from both sides of the bulkhead.

Portlights in the end bulkheads of enclosed superstructures are to be of substantial construction and provided with efficient inside deadlights. Also see 3-2-14/7 and 3-2-14/9.

The location and means of the closing appliances for windows are to be in accordance with 3-2-14/9.

5.3 Sills of Access Openings

Except as otherwise provided in these Rules, the height of the sills of access openings in bulkheads at the ends of enclosed superstructures is to be at least 380 mm (15 in.) above the deck. See 3-2-12/Table 1 for required sill heights.

5.5 Means of Access

Superstructures are not to be regarded as enclosed unless access is provided for the crew to reach machinery and other working spaces inside these superstructures by alternate means which are available at all times when bulkhead openings are closed.

7 Open Superstructures

Superstructures with openings which do not fully comply with 3-2-9/5 are to be considered as open superstructures. See also 3-2-14/5.7.

9 Deckhouses

Deckhouses are to comply with 3-2-9/3. Bulkheads are to be arranged as necessary in the main hull to support deckhouses.

The closing appliances for the openings in deckhouse bulkheads are to comply with 3-2-9/5.1.

Doors for access openings into deckhouses are to be of steel or other equivalent material, permanently and strongly attached to the bulkhead. The doors are to be provided with gaskets and clamping devices, or other equivalent arrangements, permanently attached to the bulkhead or to the doors themselves, and the doors are to be arranged so that they can be operated from both sides of the bulkhead.

10 Aluminum Deckhouses *(2002)*

10.1 Scantling Correction

Where deckhouses are constructed of aluminum alloys, the required plate thickness and stiffener section modulus, *SM,* are first to be determined as required for steel deckhouses, and are then to be increased by the material factor, Q_0, as indicated below.

For all deck and bulkhead plating and stiffeners, the required thickness and section modulus for aluminum alloy plate and shapes are obtained from the following equations:

Deck plating:

$$t_{al} = \frac{0.9(Q + \sqrt{Q})}{2} t_s$$

Bulkhead plating:

$$t_{al} = 0.9 Q_0 t_s$$

Deck and bulkhead stiffeners:

$$SM_{al} = 0.9 Q_0 SM_s$$

where

t_{al} = minimum thickness of aluminum plate

t_s = required plate thickness for steel obtained from 3-2-3/3 for decks and 3-2-9/3.5 for side and end bulkheads

SM_{al} = minimum section modulus of aluminum stiffeners

SM_s = minimum section modulus of steel stiffeners, as determined from 3-2-6/1 and 3-2-6/3 for deck stiffeners and 3.2.9/3.3 for bulkhead stiffeners

Q = material factor, as determined from 3-2-9/10.3 below

Q_0 = material factor, as determined from 3-2-9/10.3 below

10.3 Material Factors

The material factor, Q, is obtained from the following equation:

$Q = 0.9 + (120/Y_{al})$ SI Units

$Q = 0.9 + (12/Y_{al})$ MKS Units

$Q = 0.9 + (17000/Y_{al})$ U.S. Units

but is not to be taken as less than Q_0 below.

The material factor, Q_0, is obtained from the following equation:

$Q_0 = 635/(\sigma_y + \sigma_u)$ SI Units

$Q_0 = 65/(\sigma_y + \sigma_u)$ MKS Units

$Q_0 = 92000/(\sigma_y + \sigma_u)$ U.S. Units

Y_{al} = minimum yield strength of the welded aluminum alloy under consideration at 2% offset in a 254 mm (10 in.) gauge length, in N/mm^2 (kgf/mm^2, psi), in accordance with the requirements of the table below

σ_u = minimum ultimate strength of the welded aluminum alloy under consideration, in N/mm^2 (kgf/mm^2, psi), in accordance with the table below

σ_y = minimum yield strength of the welded aluminum alloy under consideration, in N/mm^2 (kgf/mm^2, psi), in accordance with the table below

Minimum Mechanical Properties for Butt-Welded Aluminum Alloys

Alloy	*Ultimate Tensile Strength (σ_u) N/mm^2 (kgf/mm^2, psi)*	*Yield Strength (σ_y) (3) N/mm^2 (kgf/mm^2, psi)*
5083 (1)	275 (28.1, 40000)	125 (12.7, 18000)
5086 (1)	240 (24.6, 35000)	95 (9.85, 14000)
5454 (1)	215 (21.8, 31000)	85 (8.45, 12000)
5456 (1)	290 (29.5, 42000)	130 (13.4, 19000)
6061-T6 (2)	165 (16.9, 24000)	105 (10.6, 15000)

Notes:

1 All tempers

2 Values when welded with 4043, 5183, 5356 or 5556 filler wire.

3 Yield strength is not required for weld procedure qualification. Values shown apply to the yield strength values of 3-2-9/10.3.

For other alloys, refer to Table 4 of Section 3 of the Aluminum Association's Aluminum Construction Manual.

10.5 Attachments

Stiffeners on bulkheads are to be attached to the deck plating at their upper and lower ends by welding all around, for which cladding metal is to be inserted between stiffeners and steel deck plate. Suitable means are to be taken to avoid direct contact of faying surfaces of aluminum to steel.

11 Helicopter Decks

11.1 General

Helicopter landing facilities, where provided, are to meet the following structural and safety requirements. The attention of owners, builders and designers is directed to various international and governmental regulations and guides regarding the operational and other design requirements for helicopters landing on ships. See also Section 1-1-5 of the ABS *Rules for Conditions of Classification (Part 1)* and 4-5-1/7 of these Rules. Plans showing the arrangement, scantlings and details of the helicopter deck are to be submitted. The arrangement plan is to show the overall size of the helicopter deck and the designated landing area. If the arrangement provides for the securing of a helicopter or helicopters to the deck, the predetermined position(s) selected to accommodate the secured helicopter, in addition to the locations of deck fittings for securing the helicopter, are to be shown. The type of helicopter to be considered is to be specified and calculations for appropriate loading conditions are to be submitted.

11.3 Structure

Scantlings of helicopter decks and supporting structure are to be determined on the basis of the following loading conditions, whichever is greater, in association with the allowable factors of safety shown in 3-2-9/Table 3. Plastic design considerations may be applied for deck plating and stiffeners.

11.3.1 Overall Distributed Loading

A minimum distributed loading of 2010 N/m^2 (205 kgf/m^2, 42 lbf/ft^2) is to be taken over the entire helicopter deck.

11.3.2 Helicopter Landing Impact Loading

A load of not less than 75% of the helicopter maximum take-off weight is to be taken on each of two square areas, 0.3 m × 0.3 m (1 ft × 1 ft). Alternatively, the manufacturer's recommended wheel impact loading will be considered. The deck is to be considered for helicopter landings at any location within the designated landing area. The structural weight of the helicopter deck is to be added to the helicopter impact loading when considering girders, stanchions, truss supports, etc. Where the upper deck of the superstructure or deckhouse is used as a helicopter deck and the spaces below are normally manned (quarters, bridge, control room, etc.), the impact loading is to be multiplied by a factor of 1.15.

11.3.3 Stowed Helicopter Loading

If provisions are made to accommodate helicopters secured to the deck in a predetermined position, the structure is to be considered for a local loading equal to the manufacturer's recommended wheel loadings at maximum take-off weight, multiplied by a dynamic amplification factor based on the predicted motions of the vessel for this condition, as may be applicable for the vessel under consideration.

In addition to the helicopter load, a uniformly distributed loading of 490 N/m^2 (50 kgf/m^2, 10.5 lbf/ft^2) representing wet snow or ice is to be considered, if applicable. For the girders, stanchions, truss supports, etc., the structural weight of the helicopter deck is also to be considered.

11.3.4 Loading due to Motions of Vessel

The structure supporting helicopter decks is to withstand the loads resulting from the motions of the vessel.

11.3.5 Special Landing Gear

Helicopters fitted with landing gear other than wheels will be specially considered.

11.3.6 Environmental Loading

Calculations are to consider anticipated wind and wave impact loadings on helicopter decks and their supporting structures.

11.5 Safety Net

The unprotected perimeter of the helicopter landing deck is to be provided with safety netting or equivalent.

11.7 Aluminum Decks

Aluminum may be used for helicopter decks above deckhouses provided the following conditions are complied with:

i) There are to be no openings in the exterior bulkheads directly below the helicopter decks.

ii) All windows in the lower exterior bulkheads are to be fitted with steel shutters.

TABLE 3
Allowable Factors of Safety Based on *Y* for Helicopter Decks

Y = specified minimum yield point or yield strength of the material

	Plating	*Beams*	*Girders, Stanchions Truss Supports, etc. (See Note 3)*
Overall Distributed Loading	1.67 (See Note 1)	1.67	1.67
Helicopter Landing Impact Loading	(See Note 2)	1.00	1.10
Stowed Helicopter Loading	1.00	1.10	1.25

Notes:

1 The minimum plate thickness, *t,* is generally not to be less than that obtained from the following:

Beam Spacing	*t*
460 mm	4.0 mm
610 mm	5.0 mm
760 mm	6.0 mm

Beam Spacing	*t*
18 in.	0.16 in.
24 in.	0.20 in.
30 in.	0.24 in.

2 An allowable stress that exceeds *Y* may be considered, provided the rationale of the submitted analysis is sufficiently conservative.

3 For members subjected to axial compression, the factor of safety is to be based on the yield stress or critical buckling stress, whichever is less.

PART

3

CHAPTER 2 **Hull Structures and Arrangements**

SECTION 10 **Keels, Stems, Stern Frames, Shaft Struts, and Propeller Nozzles**

1 Keels

1.1 Bar Keels

Bar keels are to have thicknesses and depths not less than that obtained from the following equations:

$t = 0.625L + 12.5$ mm $\qquad$ $t = 0.0075L + 0.50$ in.

$h = 1.46L + 100$ mm $\qquad$ $h = 0.0175L + 4$ in.

where

t = thickness, in mm (in.)

h = depth, in mm (in.)

L = length of vessel, in m (ft), as defined in Section 3-1-1

Thicknesses and widths other than given above are acceptable, provided the section modulii and moments of inertia about the transverse horizontal axis are not less than given above, nor is h/t more than 4.5.

1.3 Plate Keels

The thickness of the plate keel throughout the length of the vessel is to be not less than the bottom shell required in 3-2-2/3.3.

3 Stems

3.1 Bar Stems

Bar stems are to have thicknesses and widths not less than that obtained from the following equations:

$t = 0.625L + 6.35$ mm $\qquad$ $t = 0.0075L + 0.25$ in.

$w = 1.25L + 90$ mm $\qquad$ $w = 0.015L + 3.5$ in.

where

t = thickness, in mm (in.)

w = width, in mm (in.)

L = length of vessel, in m (ft), as defined in Section 3-1-1

This thickness and width is to be maintained between the keel and design load waterline. Above the design load waterline, they may be gradually reduced until the area at the head is 70% of that obtained from the equations.

Thicknesses and widths other than given above are acceptable, provided the section modulii and moments of inertia about the longitudinal axis are not less than above, nor w/t more than 5.5. The thickness of the bar stem, in general, should also not be less than twice the shell thickness.

3.3 Cast or Forged Stems

Cast or forged stems of special shape are to be proportioned to provide strengths at least equivalent to those of bar stems, as obtained in 3-2-10/3.1, and all joints and connections are to be at least as effective as would be required on equivalent bar stems.

3.5 Plate Stems

Where plate stems are used, they are not to be less in thickness than the bottom shell plating required in 3-2-2/1 and 3-2-2/3, where s is the frame spacing, or 610 mm (24 in.), if greater.

5 Sternposts

5.1 Bar Sternposts

Bar sternposts without propeller bosses are to have thicknesses and widths not less than that obtained from the following equations:

$t = 0.73L + 10$ mm $\qquad$ $t = 0.0088L + 0.39$ in.

$b = 1.283L + 87.4$ mm $\qquad$ $b = 0.0154L + 3.44$ in.

where

t = thickness, in mm (in.)

b = width, in mm (in.)

L = length of vessel, in m (ft), as defined in Section 3-1-1

Above the bottom shell plating, sternposts may be gradually reduced until the areas at their heads are half the areas obtained from the above equations.

Thickness or width less than given above are acceptable, provided the section modulus and moment of inertia about the longitudinal axis are not less than those of a plate having the minimum thickness and width given above, and with b/t not more than 4.0.

5.3 Cast, Forged, or Fabricated Sternposts

Cast, forged or fabricated sternposts of special shape are to be so proportioned as to provide strengths at least equivalent to those of bar posts, as obtained from 3-2-10/5.1, and all joints and connections are to be at least as effective as would be required on equivalent bar posts.

7 Stern Frames

Except as modified in 3-2-10/9, the scantlings of stern frames of single screw vessels are to be in accordance with the following, as applicable.

7.1 Below the Boss

7.1.1 Fabricated Stern Frame

The thickness, t, width, w, and length, ℓ, are not to be less than given by the following equations:

$t = 0.225\sqrt{L}$ cm $\qquad$ $t = 0.049\sqrt{L}$ in.

$w = 5\sqrt{L}$ cm $\qquad$ $w = 1.09\sqrt{L}$ in.

$\ell = 4\sqrt{L}$ cm $\qquad$ $\ell = 0.87\sqrt{L}$ in.

Widths and lengths other than given above are acceptable, provided the section modulus, SM, about the longitudinal axis is not less than:

$SM = 1.60L^{1.5}$ cm^3 $\qquad$ $SM = 0.0164L^{1.5}$ in^3

where

t = thickness of side plating, in cm (in.) (See 3-2-10/Figure 1)

w = width of stern frame, in cm (in.) (See 3-2-10/Figure 1)

ℓ = length of stern frame, in cm (in.) (See 3-2-10/Figure 1)

L = length of vessel, in m (ft), as defined in Section 3-1-1

7.1.2 Cast Stern Frame

The thicknesses, t_1, t_2, width, w, and length, ℓ, are not to be less than given by the following equations:

$t_1 = 0.3\sqrt{L}$ cm $\qquad$ $t_1 = 0.065\sqrt{L}$ in.

but not less than 2.5 cm (1.0 in.)

$t_2 = 1.25t_1$

$w = 5\sqrt{L}$ cm $\qquad$ $w = 1.09\sqrt{L}$ in.

$\ell = 4\sqrt{L}$ cm $\qquad$ $\ell = 0.87\sqrt{L}$ in.

Widths and lengths other than given above are acceptable, provided the section modulus, SM, about the longitudinal axis is not less than:

$SM = 1.60L^{1.5}K_g$ cm^3 $\qquad$ $SM = 0.0164L^{1.5}K_g$ in^3

where

t_1 = thickness of casting at end. (See 3-2-10/Figure 1)

t_2 = thickness of casting at mid-length. (See 3-2-10/Figure 1)

K_g = material factor defined in 3-2-11/1.3

w, ℓ, L are as defined in 3-2-10/7.1.1.

The thickness in way of butt welding to shell plating may be tapered below t_1. The length of taper is to be at least three times the offset.

The castings are to be cored out to avoid large masses of thick material likely to contain defects and to maintain a relatively uniform section throughout. Suitable radii are to be provided in way of changes in section.

7.3 Above the Boss

Above the propeller boss, the scantlings are to be in accordance with 3-2-10/7.1, except that in the upper part of the propeller aperture where the hull form is full and centerline supports are provided, the thickness may be reduced to 80% of the requirements in 3-2-10/7.1, subject to the same minimum for cast steel stern frames.

7.5 Secondary Members

Where round bars are used at the after edge of stern frames, their scantlings and connection details are to be such as to facilitate welding.

Ribs or horizontal brackets of thickness not less than $0.8t$ or $0.8t_1$ are to be provided at suitable intervals, extended forward and attached to the adjacent floor. Where t or t_1 is reduced in accordance with 3-2-10/7.3, a proportionate reduction in the thickness of ribs or horizontal brackets may be made.

FIGURE 1
Stern Frame

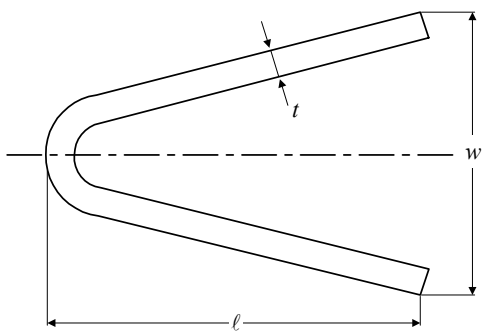

a. Fabricated

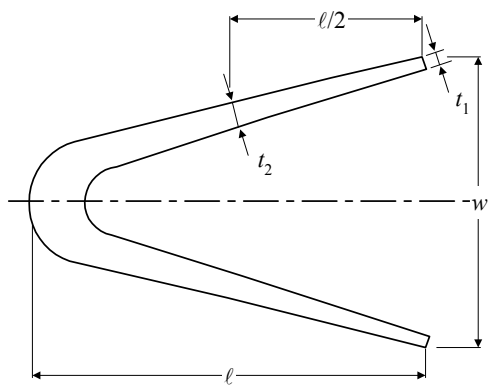

b. Cast

9 Stern Frames with Shoepieces

The scantlings below the boss of stern frames with shoepieces are to be gradually increased to provide strength and stiffness in proportion to those of the shoepieces.

11 Shoepieces

11.1 General

The shoepiece is to be sloped to avoid pressure from the keel blocks when docking and is to extend at least two frame spaces forward of the forward edge of the propeller boss.

11.3 Design Stress

The equivalent stress, σ_e, in the shoepiece at any section is not to exceed $115/K_g$ N/mm^2 ($11.7/K_g$ kgf/mm^2, $16700/K_g$ psi) and is to be obtained from the following equation:

$$\sigma_e = n\sqrt{\sigma_b^2 + 3\tau^2}$$

where

n	=	1000 (1000, 2240)
K_g	=	K, as defined in 3-2-11/1.3 for castings and forgings
	=	1.0 for ordinary strength hull steel plate
σ_b	=	bending stress = $0.5C_R\ell/Z_v$
C_R	=	rudder force, as defined in 3-2-11/3.
ℓ	=	horizontal distance between centerline of rudder stock and the particular section of the stern frame shoe, in m (in.) (see 3-2-10/Figure 2)
Z_v	=	section modulus of shoepiece about the vertical axis at the particular section under consideration, in cm^3 (in^3)
τ	=	shear stress = $0.5C_R/A_s$
A_s	=	sectional area at the section of the shoepiece under consideration, in mm^2 (in^2)

11.5 Minimum Scantlings

In addition, shoepiece width is to be approximately twice the depth, and vertical and horizontal section modulus and sectional area are in no case less than required by the following equations.

$Z_z = k_z C_R \ell K_g$ cm^3 (in^3)

$Z_y = 0.5Z_z$ cm^3 (in^3)

$A_s' = k_a C_R K_g$ mm^2 (in^2)

where

Z_z	=	minimum required section modulus of shoepiece about the vertical axis at the particular section under consideration
Z_y	=	minimum required section modulus of shoepiece about the transverse horizontal axis at the particular section under consideration
A_s'	=	minimum required sectional area of shoepiece at the section under consideration
k_z	=	6.25 (61.3, 0.0967)
k_a	=	10.4 (102, 0.161)

C_R, ℓ and K_g are as defined in 3-2-10/11.3.

FIGURE 2
Shoepiece

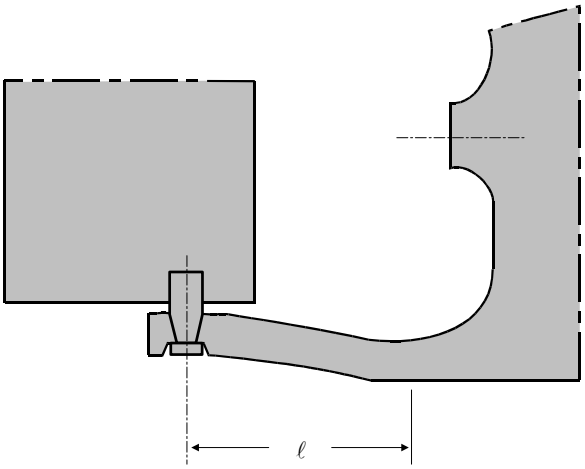

13 Rudder Horns

Vessels that have rudder horns are to meet the requirements in 3-2-13/5 of the *Steel Vessel Rules*.

15 Rudder Gudgeons

Rudder gudgeons are to be an integral part of the stern frame. The bearing length of the pintle is to be between 1.0 and 1.2 times the pintle diameter, and the thickness of the pintle housing is not to be less than 25% of the pintle diameter.

17 Shaft Struts

17.1 General

Tail-shaft (propeller-shaft) struts, where provided, may be of the V or I type. The thickness of the strut barrel or boss is to be at least one-fourth the diameter of the tail shaft. The length of the strut barrel or boss is to be adequate to accommodate the required length of propeller-end bearings. The following equations are for struts having streamlined cross-sectional shapes.

17.3 V Strut

17.3.1 Inertia

The moment of inertia, $I_{x\text{-}x}$, of each strut arm is not to be less than that obtained from the following equation:

$$I_{x\text{-}x} = 0.0044D^4 \qquad \text{mm}^4\ (\text{in}^4)$$

where

D = required diameter of ABS Grade 2 tail shaft, in mm (in.) (see Section 4-3-1)

17.3.2 Section Modulus

The section modulus, $SM_{x\text{-}x}$, of each strut arm is not to be less than that obtained from the following equation:

$$SM_{x\text{-}x} = 0.024D^3 \qquad \text{mm}^3\ (\text{in}^3)$$

where

D = required diameter of ABS Grade 2 tail shaft, in mm (in.)

Where the included angle is less than 45 degrees, the foregoing scantlings are to be specially considered.

17.5 I Strut

17.5.1 Inertia

The moment of inertia, $I_{x\text{-}x}$, of the strut arm is not to be less than that obtained from the following equation:

$$I_{x\text{-}x} = 0.018D^4 \qquad \text{mm}^4\ (\text{in}^4)$$

where

D = required diameter of ABS Grade 2 tail shaft, in mm (in.)

17.5.2 Section Modulus

The section modulus, $SM_{x\text{-}x}$, of the strut is not to be less than that obtained from the following equation:

$$SM_{x\text{-}x} = 0.068D^3 \qquad \text{mm}^3\ (\text{in}^3)$$

where

D = required diameter of ABS Grade 2 tail shaft, in mm (in.)

17.7 Strut Length

The length of the longer leg of a V strut or the leg of an I strut, measured from the outside perimeter of the strut barrel or boss to the outside of the shell plating, is not to exceed 10.6 times the diameter of the tail shaft. Where this length is exceeded, the width and thickness of the strut are to be increased, and the strut design will be given special consideration.

19 Propeller Nozzles *(2009)*

19.1 Application

The requirements in this section are applicable for fixed propeller nozzles with inner diameter d of 5 meters (16.4 feet) or less. Nozzles of larger inner diameter are subject to special consideration with all supporting documents and calculations submitted for review.

19.3 Design Pressure

The design pressure of the nozzle is to be obtained from the following:

$$p_d = 10^{-6} \cdot c \cdot \varepsilon \cdot \left(\frac{N}{A_p}\right) \qquad \text{N/mm}^2\ (\text{kgf/mm}^2, \text{psi})$$

where

c = coefficient as indicated in 3-2-10/Table 1

ε = coefficient as indicated in 3-2-10/Table 2, but not to be taken less than 10

N = maximum shaft power, in kW (hp)

A_p = propeller disc area

= $D^2 \frac{\pi}{4}$, in m^2 (ft^2)

D = propeller diameter, in m (ft)

TABLE 1
Coefficient c (2009)

Propeller Zone (see 3-2-10/Figure 3)	c		
	p_d *in N/mm*^{2}	p_d *in kgf/mm*^{2}	p_d *in psi*
2	10.0	1.02	11.62×10^3
1 & 3	5.0	0.51	5.81×10^3
4	3.5	0.36	4.067×10^3

TABLE 2
Coefficient ε (2009)

	p_d *in N/mm*^{2}	p_d *in kgf/mm*^{2}	p_d *in psi*
ε	$21-2\times10^{-2}\left(\frac{N}{A_p}\right)$	$21-2\times10^{-2}\left(\frac{N}{A_p}\right)$	$21-16\times10^{-2}\left(\frac{N}{A_p}\right)$

19.5 Nozzle Cylinder

19.5.1 Shell Plate Thickness

The thickness of the nozzle shell plating, in mm (in.), is not to be less than:

$t = t_o + t_c$, but not to be taken less than 7.5 (0.3) mm (in.)

where

t_o = thickness obtained from the following formula:

= $c_n \cdot S_p \cdot \sqrt{p_d}$ mm (in.)

c_n = coefficient as indicated in 3-2-10/Table 3

S_p = spacing of ring webs in mm (in.)

p_d = nozzle design pressure in N/mm^2 (kgf/mm^2, psi), as defined in 3-2-10/19.3

t_c = corrosion allowance determined by 3-2-10/Table 4

K_n = nozzle material factor as defined in 3-2-11/1.3

TABLE 3
Coefficient c_n (2009)

	p_d in N/mm^2	p_d in kgf/mm^2	p_d in psi
c_n	1.58×10^{-1}	4.95×10^{-1}	1.32×10^{-2}

TABLE 4
Corrosion Allowance t_c (2009)

Value of t_o	t_c mm (in.)
If $t_o \le 10.0$ (0.4)	1.5 (0.06)
If $t_o > 10.0$ (0.4)	the lesser of b_1, b_2

where

$b_1 =$ 3.0 (0.12) mm (in.)

$$b_2 = \left(\frac{t_o}{\sqrt{K_n}} + 5\right) \times 10^{-1} \text{ mm or } b_2 = \left(\frac{t_o}{\sqrt{K_n}} + 0.2\right) \times 10^{-1} \text{ in.}$$

19.5.2 Internal Diaphragm Thickness

Thickness of nozzle internal ring web is not to be less than the required nozzle shell plating for Zone 3.

19.7 Nozzle Section Modulus

The minimum requirement for nozzle section modulus is obtained from the following formula:

$$SM = d^2\, b\, V_d^2\, Q\, n \quad \text{cm}^3\ (\text{in}^3)$$

where

d = nozzle inner diameter, in m (ft)

b = nozzle length, in m (ft)

V_d = design speed in ahead condition, in knots, as defined in 3-2-11/3.1

Q = reduction factor conditional on material type

= 1.0 for ordinary strength steel

= 0.78 for H32 strength steel

= 0.72 for H36 strength steel

= 0.68 for H40 strength steel

Q factor for steel having yield strength other than above is to be specially considered.

n = nozzle type coefficient taken equal to 0.7 (0.0012) for fixed nozzles

FIGURE 3
Nozzle Ring Section View *(2009)*

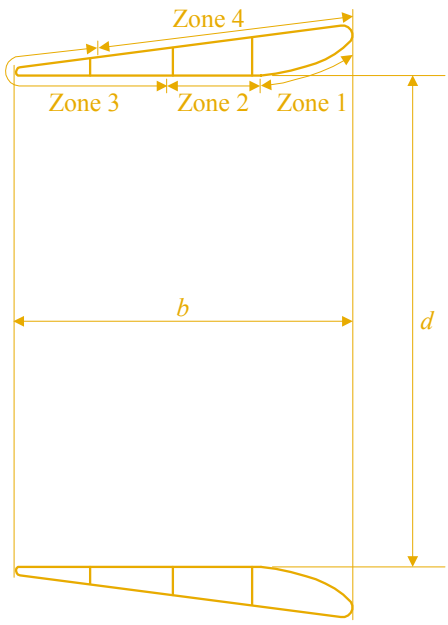

19.9 Welding Requirement

The inner and outer nozzle shell plating is to be welded to the internal stiffening ring webs with double continuous welds as far as practicable. Plug/slot welding is prohibited for the inner shell, but may be accepted for the outer shell plating, provided that the nozzle ring web spacing is not greater than 350 mm (13.8 in.).

21 Inspection of Castings

The location of radiographic or other subsurface inspections of large stern-frame and rudder-horn castings is to be indicated on the approved plans. See applicable parts of Chapter 1 of the ABS *Rules for Materials and Welding (Part 2)*.