ELECTRICAL POWER FOR CONTRACTOR'S TOOLS AND EQUIPMENT

1. SCOPE

1.1 Intent. This standard specification describes the requirements for electrical power to Contractor's tools and equipment during dockside availabilities on Coast Guard cutters. This standard applies while the ship is waterborne at any facility and is intended to protect the hull from electrolysis and the cutter crew from injury.

1.2 Appendices.

PROCESS STANDARD	APPENDIX
Utility Power for Dockside Electrical Loads	A
Shipboard Power for Shipboard Electrical Loads	B
Utility Power for Shipboard Electrical Loads	C
Shipboard Power for Dockside Electrical Loads	D
Generator Power for Dockside and Shipboard Electrical Loads	E

1.3 Terms and definitions. The terms used in multiple sections of this standard specification are defined below.

1.3.1 Earth Ground: A low impedance connection to the earth located near the service equipment or at the source of a separately derived power system (e.g., generator or transformer). Typically one or more copper grounding electrodes are driven into the earth and then bonded through low impedance grounding electrode conductors to the non-current carrying metal parts of switchgear, transformers, and panelboards located ashore. In the drawings below, earth ground is denoted with the symbol:

1.3.2 Hull Ground: A low impedance connection between the non-current carrying metal parts of switchgear, transformers, motors, heaters, panelboards, and other electrical equipment located afloat to the cutter's metal hull. Typically, such connections are made by bolting equipment directly to the welded metal structure or by braided copper grounding straps. In the drawings below, hull ground is denoted with the symbol:

1.3.3 Grounded Power: A power distribution system where one of the current-carrying conductors is bonded to ground. For example, neutral conductors originating from dockside wye connected transformer

secondary windings are typically bonded to earth ground, regardless of whether the neutral is used in any power distribution circuit. See Figure 1 below.

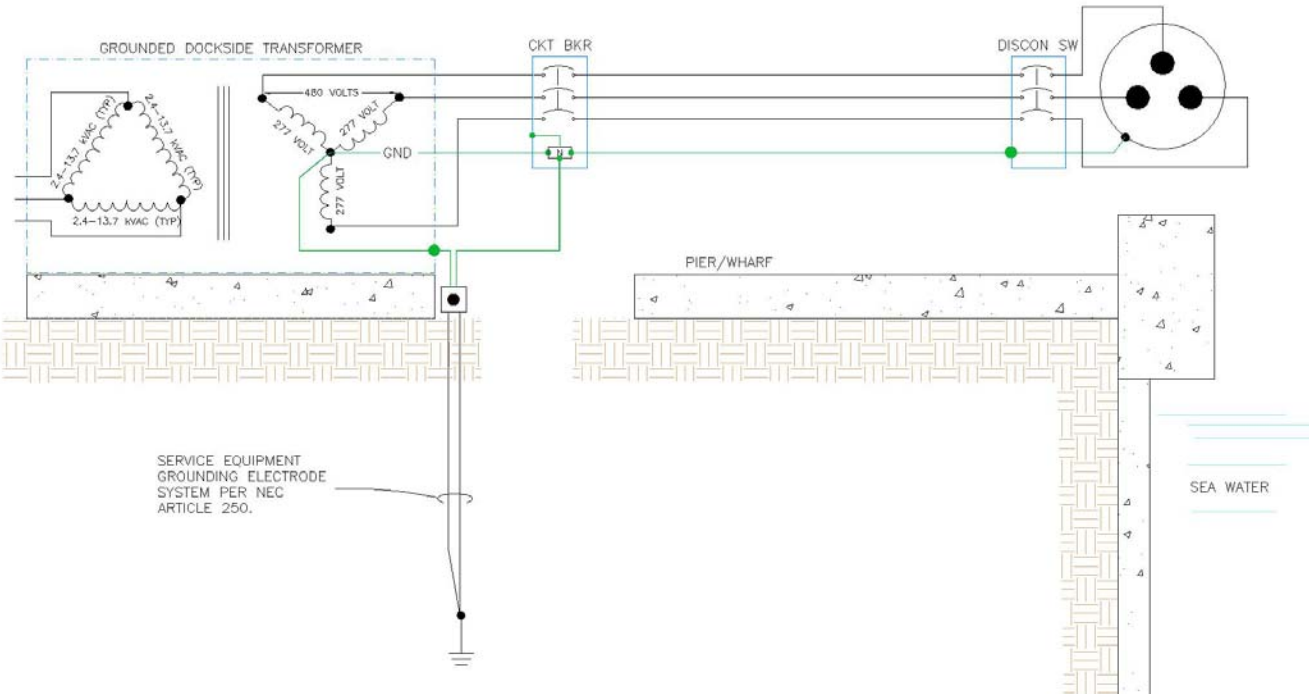

Figure 1 – Typical grounded shore power arrangement

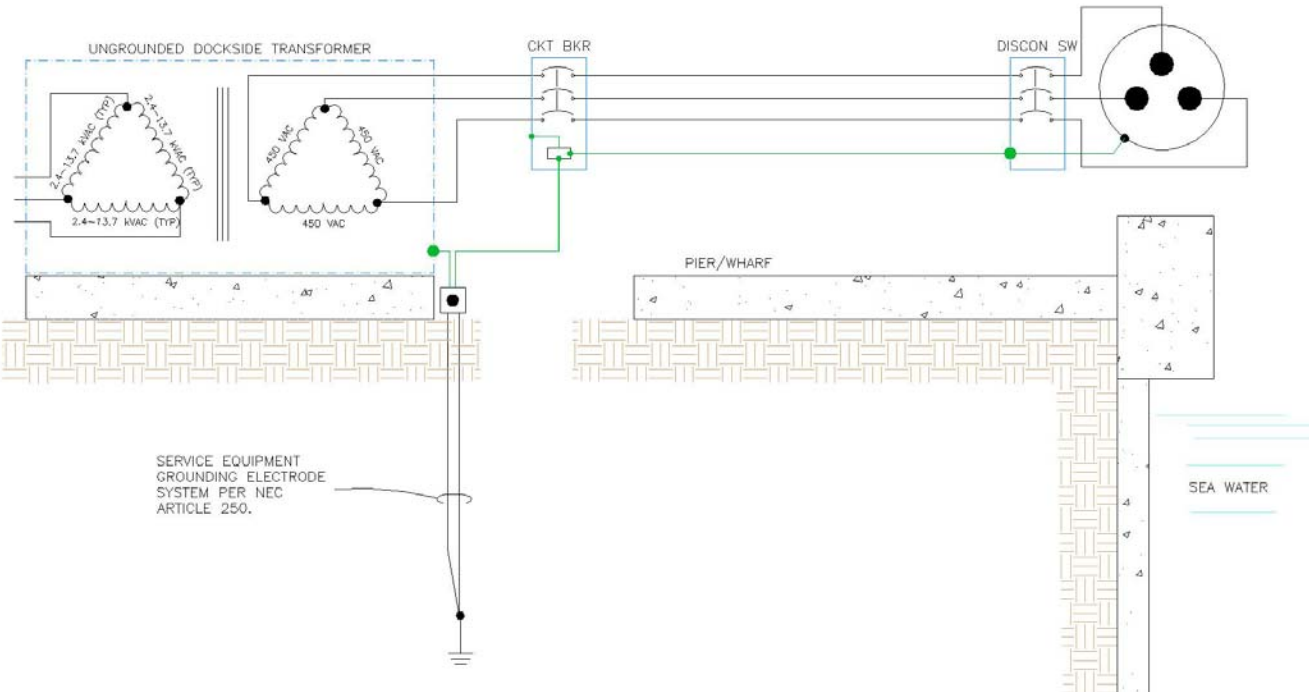

Figure 2 – Typical ungrounded shore power arrangement

1.3.4 Ungrounded Power: A power distribution system where none of the current-carrying conductors is bonded to ground. For example, all phase conductors originating from dockside delta connected transformer secondary windings are typically insulated from earth ground. See Figure 2 below. Note that the AC and DC power distribution systems aboard most Coast Guard cutters are ungrounded.

1.3.5 Isolation transformer: A transformer used to power an ungrounded power system from a grounded supply or vice versa. The voltages on the primary and secondary windings are often the same or nearly so (may have taps to fine tune output voltage). Isolation transformers installed at Coast Guard facilities may be portable units mounted on trailers or skids. Small isolation transformers may also be installed shipboard, typically powering electronic systems.

2. REFERENCES

COAST GUARD DRAWINGS

None.

COAST GUARD PUBLICATIONS

Surface Forces Logistics Center Standard Specification 0000 (SFLC Std Spec 0000), 2012, General Requirements

Surface Forces Logistics Center Standard Specification 6310 (SFLC Std Spec 6310), 2012, Requirements for Preservation of Ship Structures

OTHER REFERENCES

MIL-C-24368, Mar 1987, Connector Assemblies; Plugs and Receptacles, Electric Power Transfer, Shore to Ship and Ship to Ship, General Specification for,

National Fire Protection Association (NFPA) 70, 2011, National Electrical Code

3. REQUIREMENTS

3.1 General requirements. Adhere to the following general requirements:

3.1.1 Circuits for powering the Contractor's tools and equipment shall be installed in strict accordance with the appendix(es) below that are cited in the General Requirements. Citation of an appendix does not guarantee that such a method will satisfy the Contractor's power needs. Space constraints, dock weight limitations, reserve capacity, load diversity, waterfront access restrictions, and environmental permits shall also be considered when planning for electrical power needs.

3.1.2 Circuits used to power the Contractor's tools and equipment shall be of the proper voltage, frequency, and number of phases with adequate ampacity to prevent tripping of overcurrent protective devices. Furnish any mating plugs or adapters needed for connecting to Coast Guard receptacles, both ashore and afloat.

3.1.3 Temporary power distribution system equipment, cords, plugs, receptacles, and loads shall be suitable for the environmental conditions under which they are used.

3.1.4 Observe the requirements of NFPA 70 for temporary power installations, except that at Coast Guard facilities, splices of power conductors shall always be made inside equipment or junction boxes, never in free space as would otherwise be permitted by Article 590.4.

3.1.5 Tools or equipment that repeatedly trip ground fault or overcurrent protective devices shall be removed from service and not used again until repaired or replaced.

3.1.6 Temporary cords and cables run through watertight fittings below the damage control deck shall be equipped with twist-lock connectors or other means of rapid severance so that the fitting may be closed and dogged in the event of a flooding casualty.

3.1.7 Route and support temporary cords and cables so that they will not become submerged, nor act as a tripping or decapitation hazard to personnel. Provide sufficient slack for tidal variations. Protect deck level runs with suitable matting or other anti-wear protection. Avoid sharp bends and provide suitable anti-chafing protection when passing near sharp corners of ship structure.

3.1.8 Locate temporary lighting strings such that incandescent bulbs are separated from material that could burn, melt, or be damaged by the radiated heat.

3.1.9 Each single phase Contractor power circuit used for tools or portable equipment shall be protected by a ground fault circuit interrupter (GFCI) or protective relay set to trip when leakage current exceeds 5 to 6 mA. Temporary lighting strings (only those without receptacles) and three phase circuits need not be protected against ground faults, but if such protection is installed it shall be used. Circuits may be protected individually, typically with low current GFCI circuit breakers or receptacles, or collectively with an inline ground fault monitoring system. Prior to first use, demonstrate proper operation of each built in trip tester to the COR.

NOTE

The following circuit breakers with integral 5 mA ground fault circuit interrupters are commercially available at reasonable cost from most major panelboard manufacturers:

- **120 volt single pole, 15 A through 30 amperes**
- **240 volt double pole, 15 through 60 amperes**

High current (100 amperes or more) in line 6 mA ground fault protection systems, designed for motion picture filming in wet locations, are available for three phase systems operating between 120/208 and 277/480 VAC from the following manufacturers:

- **K-Tec™ (Littelfuse®) Shock-Block™**
- **Bender LifeGuard**

3.1.10 Submit a written plan for powering Contractor's (including any subcontractors) tools and equipment to the COR no later than 5 working days prior to the start of the availability. The plan shall identify the expected loads, grounding scheme, proposed locations of temporary electrical power distribution equipment, and sources of power. If the source of power is to be a temporary generator, include its weight, fuel tank capacity, fuel consumption rate, and footprint, including any safety zones required to keep personnel from contacting hot surfaces or exceeding hearing protection thresholds.

3.1.11 Maintain a status board showing the sources of temporary Contractor power and the locations of disconnect switches or other means of rapidly deenergizing such circuits in an emergency. The status board shall be located at the quarterdeck and shall be updated as the temporary power system evolves throughout the availability.

3.2 Touch-up preservation. When a coating has been scraped away to bond temporary power distribution equipment to installed systems, prepare and touch-up coat all disturbed surfaces to match existing adjacent surfaces. The Contractor shall prepare and touch-up coat all new and disturbed surfaces to match existing adjacent surfaces, in accordance with Std Spec 6310, paragraph 3.1.13 (Touch-ups and minor coating repairs).

3.3 Metering. When required by the General Requirements, meter the electrical energy consumed by Contractor's tools and equipment from Coast Guard funded power sources. Submit a usage report to the COR within 5 working days of project completion.

3.4 Equipment grounding. Improper grounding of Contractor's tools and equipment during long dockside availabilities can endanger personnel, particularly divers, and result in accelerated underwater body corrosion from leakage and stray current flow. All tools and equipment with metal frames, except those that are of double insulated design, shall be equipped with an equipment grounding conductor.

3.4.1 Except as allowed below, earth ground shall never be connected to hull ground through any pathway other than the harbor water. Unacceptable practices, often inadvertent, include:

3.4.1.1 Metal brows in electrical contact with the weather deck and a concrete or other conductive dock. In Figure 3 below, replacing the metal blocks with plastic or the steel wheels with rubber would break the electrical connection.

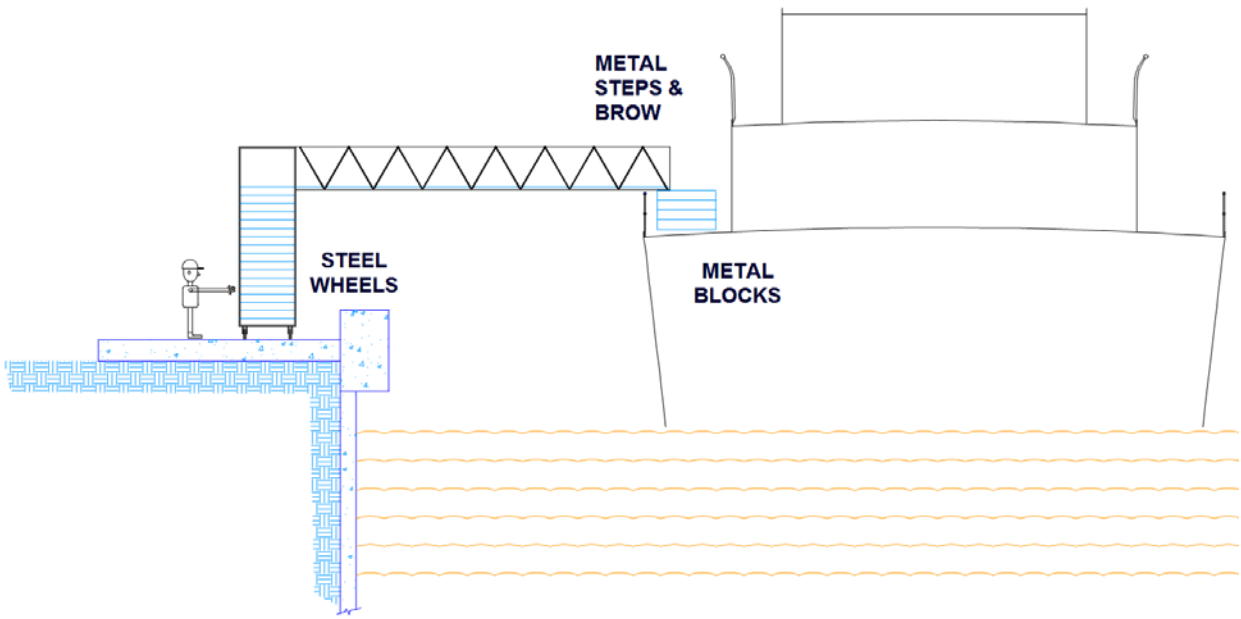

Figure 3 – Indavertent Bonding of Hull to Earth Ground via Metal Brow

3.4.1.2 Power cords with equipment grounding conductors run between metal framed equipment ashore and power sources afloat (same effect as Figure 3 above).

3.4.1.3 Power cords with equipment grounding conductors run between metal framed equipment afloat and power sources ashore. As shown in Figure 4 below, ground fault current leaking from the cutter's underwater body may increase as a result of the low resistance shunting action of the equipment grounding conductor through the metal case of the tool in contact with the metal structure. The worker on

the platform could also serve as a parallel conduction path if he were to touch a bare spot on the metal hull of the cutter.

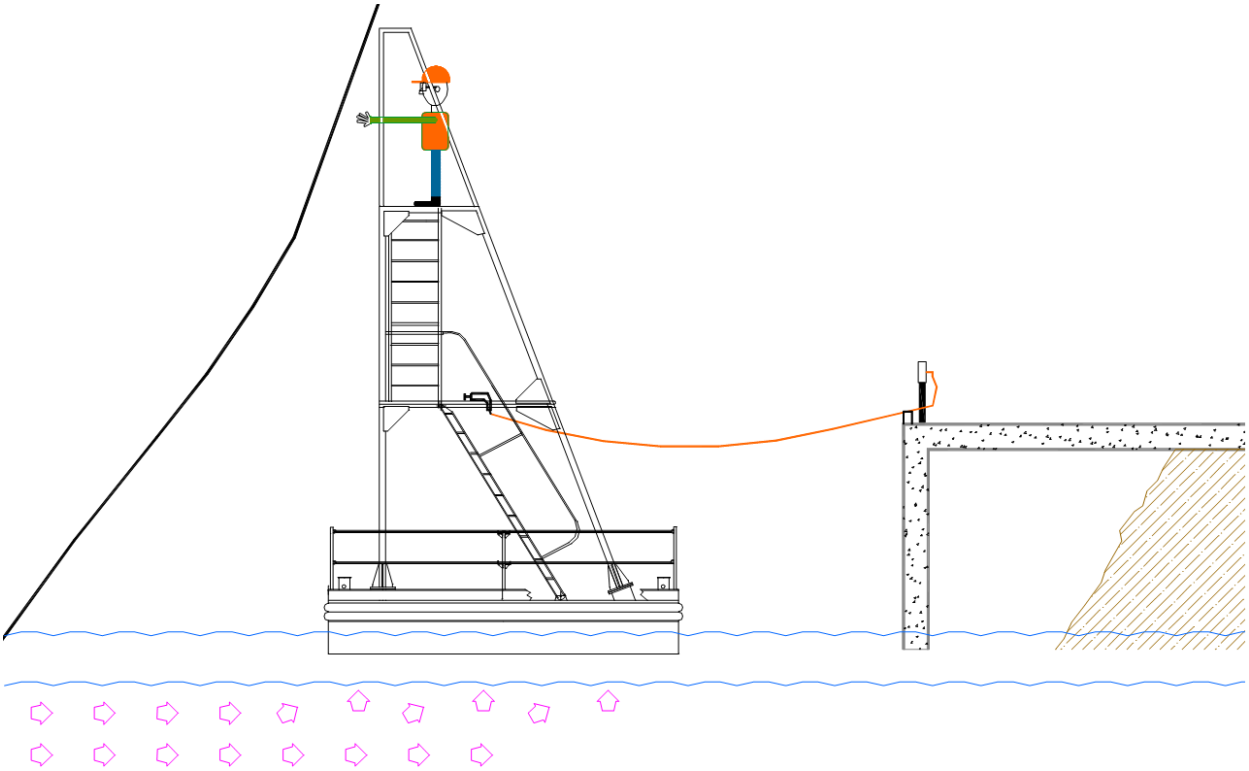

Figure 4 – Indavertent Bonding of Paint Float to Earth Ground via Tool Extension Cord

3.4.1.4 Arc welders with the common return conductor bonded to the grounded frame of the machine instead of insulated from earth. Figure 5a shows two unacceptable examples.

3.4.1.5 Two ships sharing the same arc welder. Figure 5b shows the unacceptable current flowing between the underwater bodies.

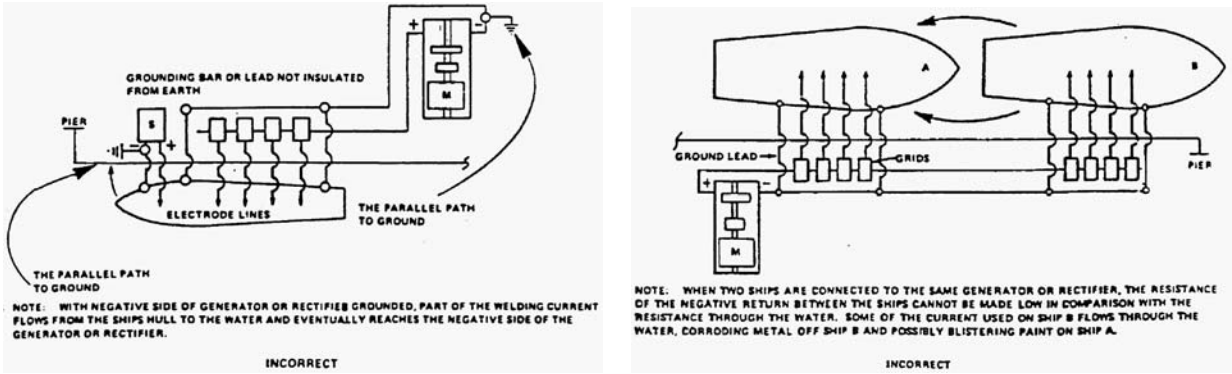

Figure 5 – Unacceptable Arc Welder Arrangements

3.4.1.6 Submerged cables of any kind, except those specifically designed for underwater husbandry tasks. Figure 6 demonstrates how inadequately supported cables can become submerged.

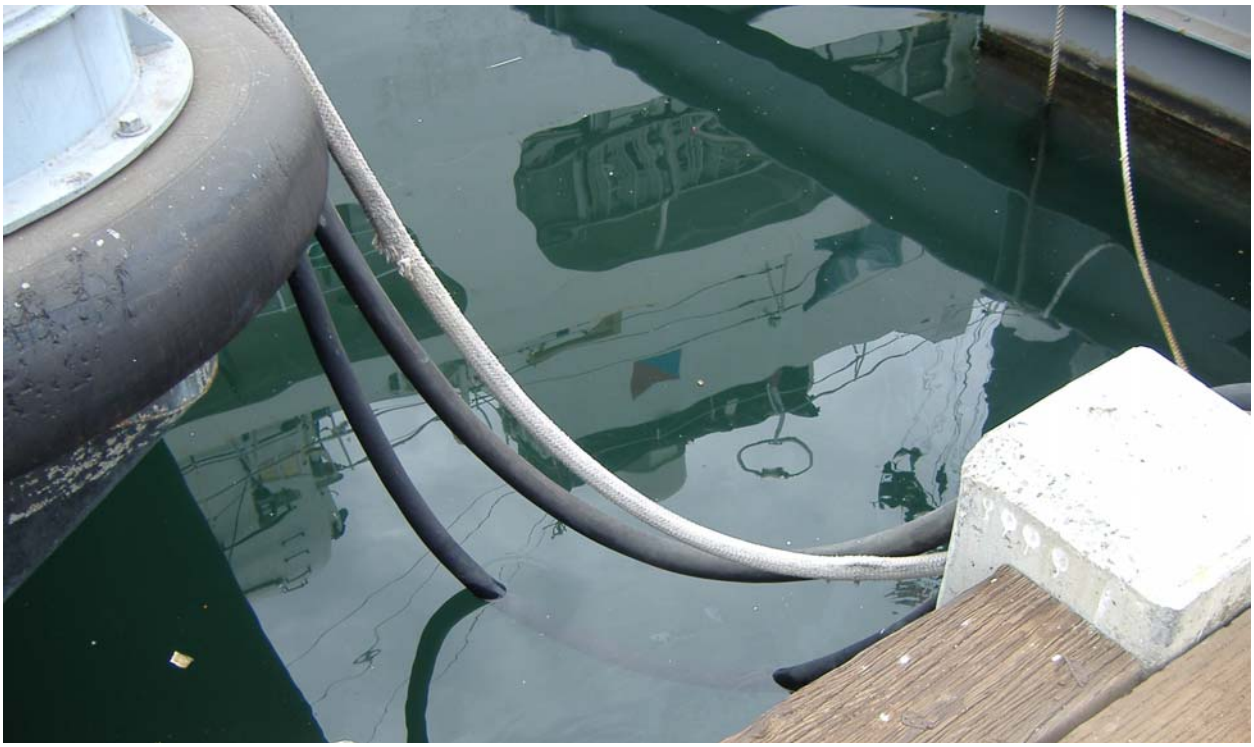

Figure 6 – Inadequate Cable Support and Unacceptable Submergence

3.4.2 For durations of less than one day, the following exceptions are allowable:

3.4.2.1 Use of metal braided fuel hoses or grounding straps to facilitate the static free transfer of fuel to or from the cutter to dockside tankage.

3.4.2.2 Rigging of metal framed material or equipment in contact with the cutter's structure to a dockside crane. Nylon slings, as shown in Figure 7 below, can be used to break the electrical connection.

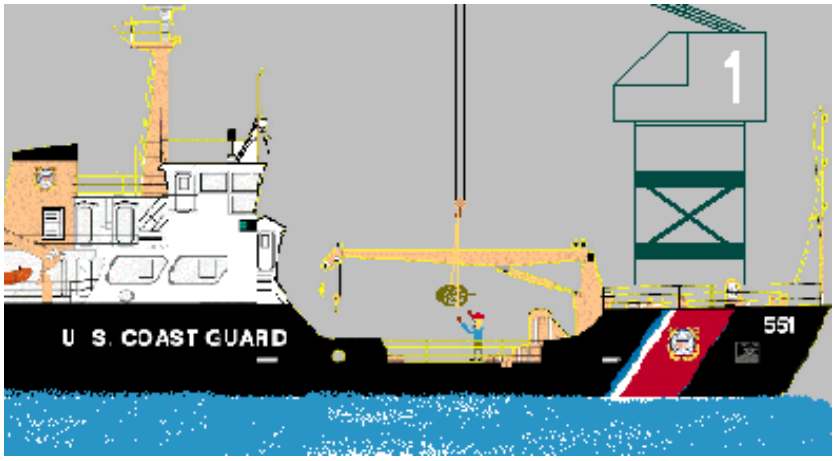

Figure 7 – Rigging of a Conductive Load from a Dockside Crane

4. NOTES

4.1 Lightning strikes will seek a parallel path to earth ground through any conductor that bonds the hull to earth ground. Consequently, transferring fuel or rigging loads from cranes is not recommended when thunderstorms are likely.

4.2 When a cutter receives shore power from a grounded power system, any passive (three lamp) type ground detector on the main switchboard will be incapable of detecting a ground. Because of the solidly grounded neutral ashore, the bulbs will always burn with equal intensity, regardless of whether a ground exists shipboard or not. For cutters with active ground detectors (225' WLB and 418' WMSL), a zero kilohm ground will be displayed when connected to a grounded power source, masking any subsequent shipboard faults. The net result in either case is that a cutter receiving grounded shore power is incapable of detecting on board ground faults, including any that may be on Contractor's tools or equipment that are receiving power from the main bus, either directly or through subpanels. In the event of a shipboard ground, fault current will flow through the underwater body as shown in Figure 8 below.

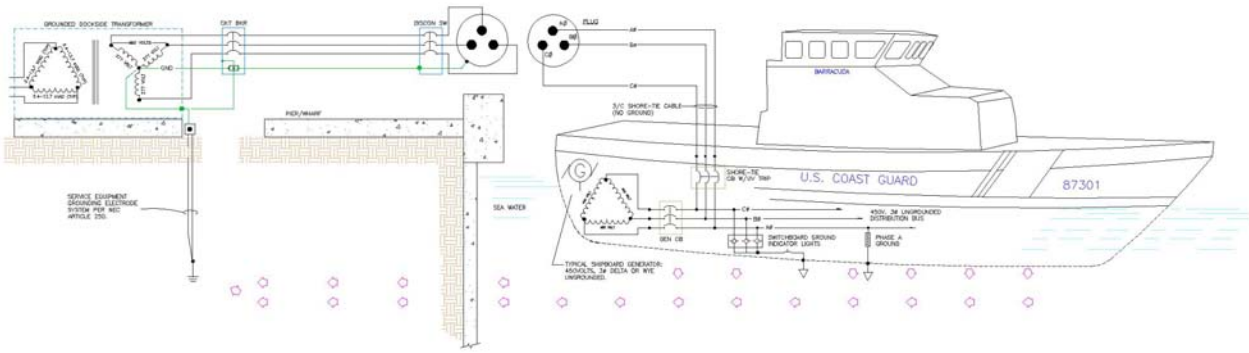

Figure 8 – On Grounded Power, Leakage Current Seeks Return Path through Hull and Harbor Water

4.3 When two ships receive shore power from the same dockside transformer, a ground aboard one will show up on the ground detector of the other. If both ships have a ground, but on different phases, leakage current will flow between the underwater bodies, potentially endangering divers as shown in Figure 9 below. Whenever possible, cutters should receive shore power from different sources.

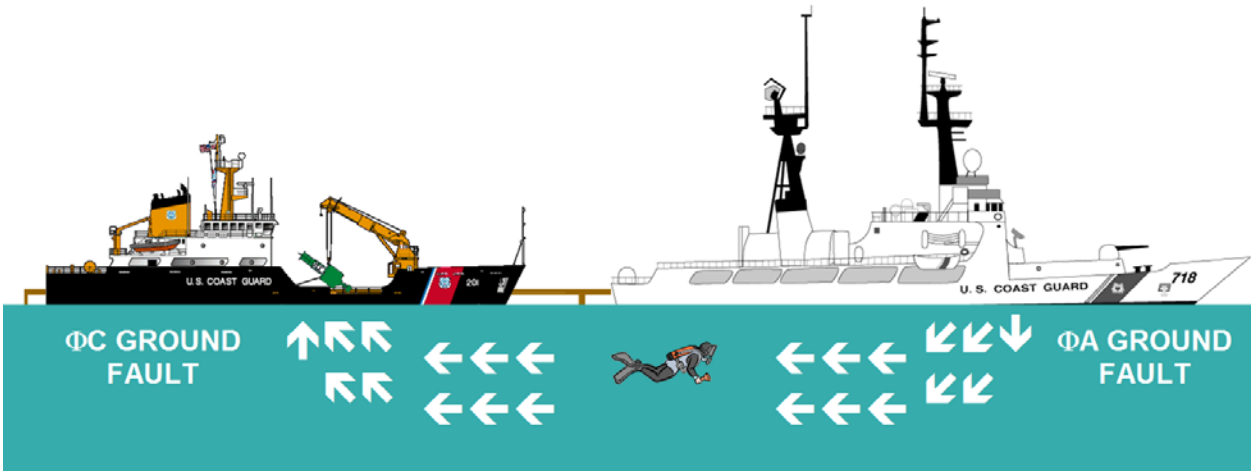

Figure 9 – When Powered from a Common Source, Ground Fault Current Can Flow Between Ships

4.4 When temporary equipment is used shipboard, but powered from shore, hull ground may become bonded to earth ground through the equipment grounding conductor and metal frame of the load. The quality of the bonding will depend upon the resistance between the deck and metal equipment frame. If such resistance is low, stray current in the harbor may preferentially seek out the underwater body, as shown in Figure 10 below, because of the lower resistance (compared to harbor water) back to the earth grounding electrodes. Over a long period, this stray current sink effect can potentially cause corrosion damage to the underwater body surfaces. The shunt path may be eliminated by using double insulated tools with a two conductor cord. Alternatively, the temporary load may be powered from the shipboard power distribution system instead of from shore.

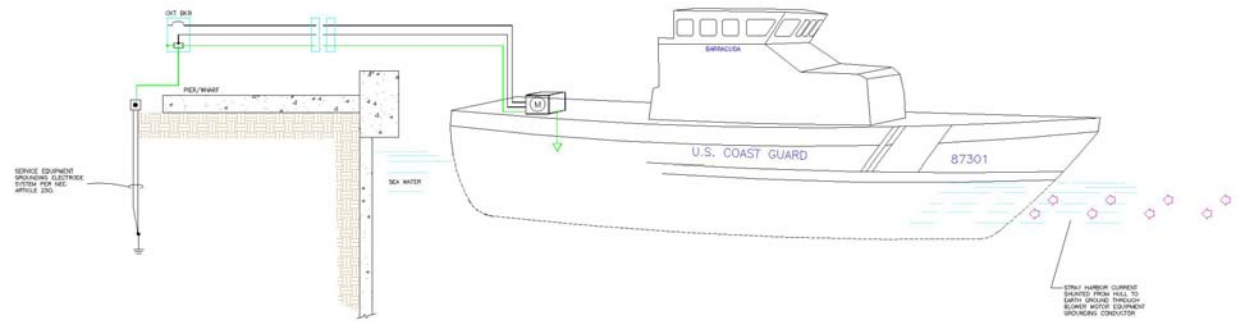

Figure 10 – Stray Harbor Current Shunting via Shipboard Load Powered from Shore

4.5 When temporary equipment is used ashore, but powered from the cutter's electrical distribution system, hull ground may become bonded to earth ground through the equipment grounding conductor and metal frame of the load. The quality of the bonding will depend upon the resistance between the deck and metal equipment frame. If such resistance is low, stray current in the harbor may preferentially seek out the underwater body, as shown in Figure 11 below, because of the lower resistance (compared to harbor water) back to the earth grounding electrodes. Over a long period, this stray current sink effect can potentially cause corrosion damage to the underwater body surfaces. The shunt path may be eliminated by using double insulated tools with a two conductor cord. Alternatively, the temporary load may be powered from shore instead of the shipboard power distribution system.

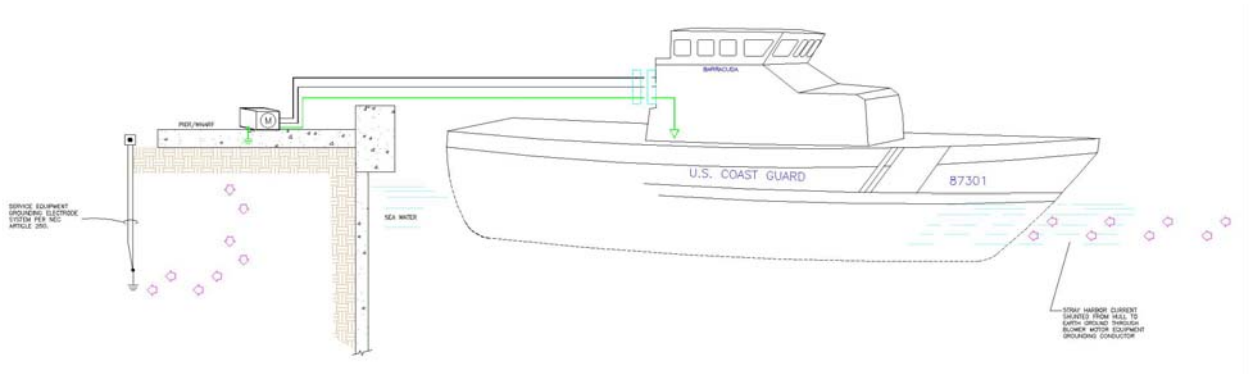

Figure 11 – Stray Harbor Current Shunting via Shore Load Powered from Ship

APPENDIX A

UTILITY POWER FOR DOCKSIDE ELECTRICAL LOADS

A1. SCOPE

A1.1 Intent. This appendix describes the particular requirements for the powering of dockside Contractor tools and equipment from the dockside power distribution system.

A2. REQUIREMENTS

A2.1 Power Sources.

A2.1.1 Contractor Power Receptacles. At large Coast Guard facilities, power mounds are often equipped with receptacles intended for ship repair Contractor use (see Figure A-1). Such receptacles are the preferred method of powering dockside Contractor tools and equipment.

A2.1.2 Typically, one single phase 120 VAC, 15 A GFCI duplex receptacle is provided.

A2.1.3 One or two 480 or 480/277 VAC sleeve and pin receptacles may be provided with typical ampacity ranging from 30 to 200 A.

Figure A-1 – Typical Sleeve and Pin Receptacle for Ship Repair Contractor Use

A2.1.4 Shore Power Receptacles. At Coast Guard facilities for medium and large cutters, Contractor power may often be obtained from unused shore power receptacles, either at the same berth or from an adjacent one. If the transformer providing power to the adjacent berth is not powering any cutter, such is the preferred connection point. Such power is normally ungrounded, although many facilities are still supplying grounded power. At some Coast Guard installations, a single shore power transformer serves multiple berths and the sum of the Government and Contractor demand must be considered to prevent overloading. When required by the General Requirements, submit a load analysis to the COR at least one week before the availability start. At facilities with ungrounded power, coordinate with the Facilities Engineering staff to ensure that the ground fault monitoring system (if installed) is active after the receptacle is energized.

A2.1.4.1 Cutters greater than 170 feet in length are powered by one or more 450 volt MIL-C-24368/2 receptacles, often referred to as NATO, Joy, or Viking receptacles (see Figure A-2). Although they are rated for up to 500 A, most are protected by 400 A circuit breakers, some by even less. Neither the receptacle nor mating MIL-C-24368/1 plug has provisions for an equipment grounding conductor, so the metal frame of equipment connected to this type of receptacle must be separately bonded to earth. The receptacle must be manually deenergized prior to opening the cover or disconnecting a plug; do not rely on the cover latch interlock circuit to trip the circuit breaker in the switchgear.

Figure A-2 – MIL-C-24368/2 Shore Power Receptacles

A2.1.4.2 Except for BLUEBELL, cutters between 87 and 160 feet in length are generally powered by a 200 A Russellstoll Max-Gard® DBRS2404 receptacle with interlocking disconnect switch (see Figure A-3). Although the receptacle contains a grounding pin that is not used in Coast Guard shore power applications, it should not be used without first verifying continuity of the low impedance path between the pin and earth ground with an ohmmeter. The mating plug is a Russellstoll Max-Gard® DS2404MP. Services are generally three-phase 450 volts, 100 to 200 amperes.

A2.1.4.3 BLUEBELL and cutters not exceeding 75 feet in length typically use a Russellstoll Max-Gard® receptacle configuration commensurate with the cutter's shore power voltage and current, but may use non-standard receptacles that suit their area of operation. Services are generally three-phase 450 volts, 60 amperes or 230 volts, 100 to 200 amperes. The reserve capacity available for powering Contractor tools and equipment may be limited.

A2.1.5 Supplemental Power. At municipal piers and other small facilities, there may be little to no reserve power from the Coast Guard's service that can be made available for Contractor use. In such

case, the Contractor may wish to discuss the availability of supplemental power with the harbormaster or electrical utility company.

Figure A-3 – Russellstoll Max-Gard® DBRS2404 Receptacle with Interlocking Disconnect Switch

A2.2 Dockside Loads.

A2.2.1 Under this appendix, all loads powered from dockside receptacles shall physically be located on the pier, wharf, or quay wall. No cords with equipment grounding conductors shall run from such receptacles or the loads served over to the cutter or any adjacent floating structure, such as a paint float.

A2.2.2 Dockside receptacles may be used to power two wire brow lighting strings.

A3. NOTES

A3.1 Typical Dockside Loads.

A3.1.1 480 VAC.

- Arc welders
- Air compressors
- Large blowers
- Lube and hydraulic oil flushing rigs
- Refrigerated and frozen food storage
- Chillers

A3.1.2 120 VAC.

- Temporary office spaces
- Brow lighting
- Flood lights

A3.2 Typical Arrangements. See Figures A-4 and A-5 below for a typical temporary power distribution system layout for Contractor's dockside tools and equipment. Note that when the source power receptacle does not contain an equipment grounding pin (e.g., MIL-C-24368), a bonding jumper from the main panel grounding bar to a suitable earth ground must be installed.

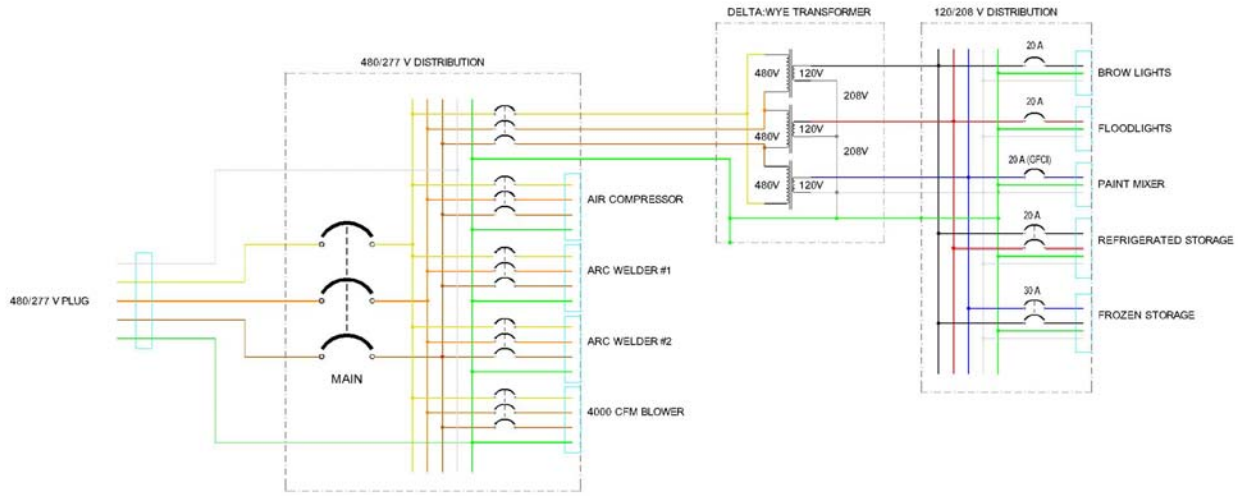

Figure A-4 – Dockside Receptacle Source with Equipment Grounding Conductor

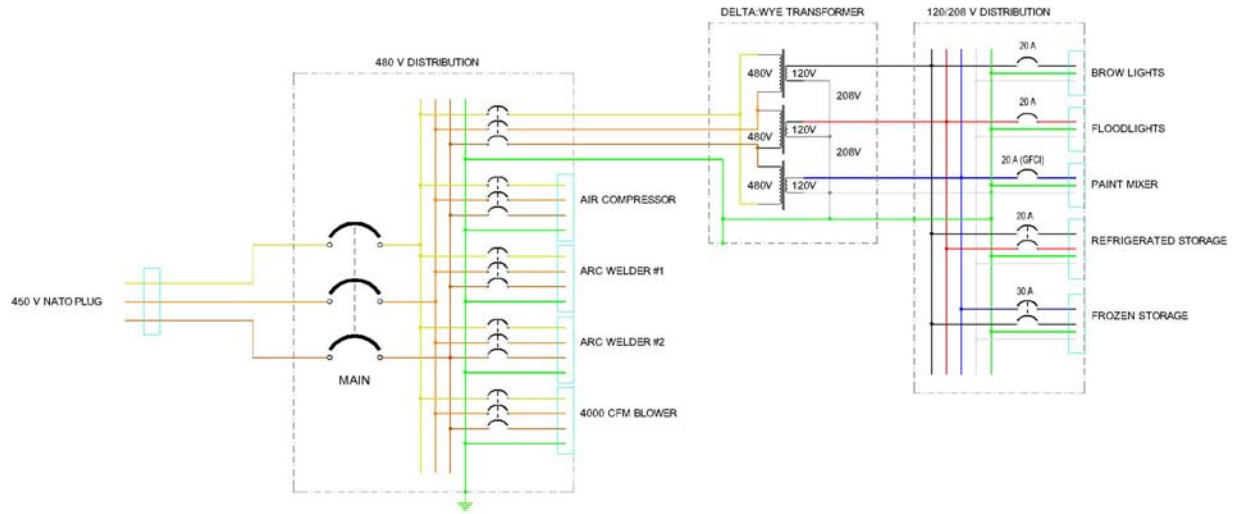

Figure A-5 – Dockside Receptacle Source without Equipment Grounding Conductor

APPENDIX B

SHIPBOARD POWER FOR SHIPBOARD ELECTRICAL LOADS

B1. SCOPE

B1.1 Intent. This appendix describes the particular requirements for the powering of shipboard Contractor tools and equipment from the cutter's power distribution system.

B2. REQUIREMENTS

B2.1 Power Sources.

B2.1.1 Welding Machine and Submersible Pump Receptacles. Cutters greater than 170 feet in length are generally outfitted with three phase 450 volt switched receptacle outlets (Navy symbol 915.1, MIL-DTL-2726/19) for plugging in welding machines and submersible pumps. These receptacles, rated for 30 A, are the preferred source of 450 volt shipboard power and are generally protected by a 30 A circuit breaker. The outlet accepts a 4 pin Navy Symbol 717.1 (MIL-R-2726/3) plug, typically soldered to type LSFHOF-9 or SOW 10/4 cable, where the fourth lead serves as an equipment grounding conductor.

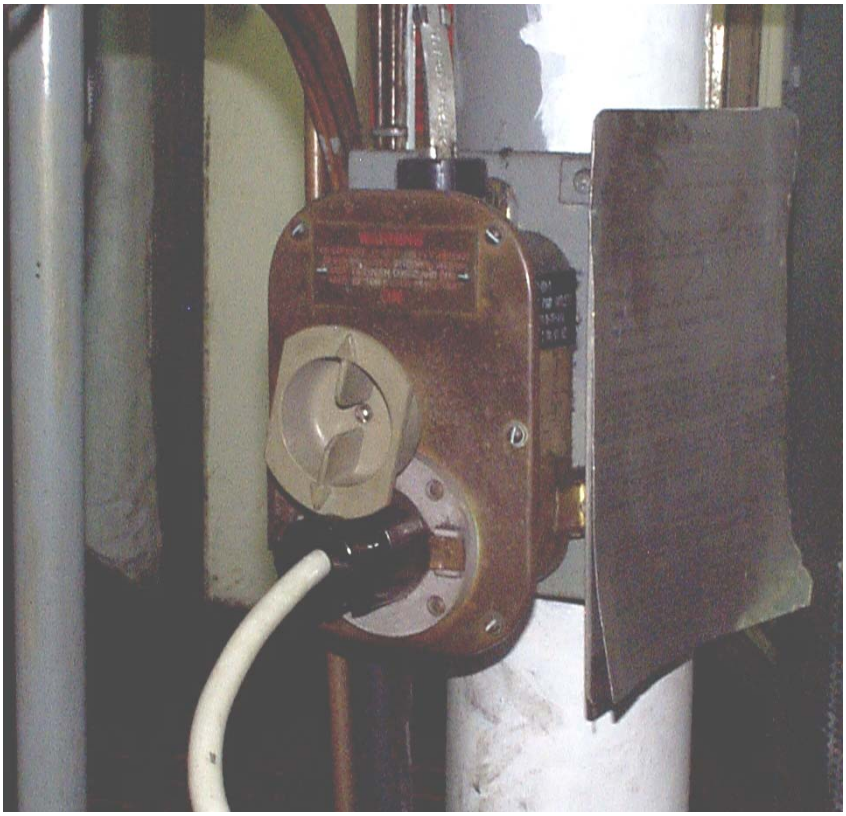

Figure B-1 – 450 VAC Switched Receptacle Outlet

B2.1.2 Science Van Receptacles. Icebreakers greater than 399 feet in length are outfitted with three phase 450 volt outlets for plugging in science vans and cargo containers These receptacles are of commercial marine duty construction, rated from 30 A to 200 A, and are the preferred source of high current shipboard power. These receptacles and associated disconnect switches are generally located on the upper weather decks and fantail areas.

B2.1.3 Standard (NEMA) Receptacles. All cutters have single phase 120 VAC duplex receptacles (NEMA 5-15R). Most are 15 A devices protected by either 15 or 20 A double pole circuit breakers. Some cutters may have 20 A receptacles (NEMA 5-20R) in selected spaces. Air capable ships, particularly those with aviation shops, may have single or duplex NEMA 6-15R receptacles for testing 400 Hz equipment. Such receptacles shall not be used for Contractor's tools or equipment unless verified to be supplied by 240 VAC, 60 Hz power. Small cutters may be outfitted with high current 120/240 volt receptacles (see Table B-1 below) that may be repurposed for Contractor use when not needed for crew habitability. Such receptacles typically supply commercial laundry and galley equipment; such equipment on larger cutters is typically hardwired to 450 VAC.

TABLE B-1 – NATIONAL ELECTRICAL MANUFACTUERS ASSOCIATION RECEPTACLES

VOLTAGE (VAC)	FREQUENCY (HZ)	CIRCUIT AMPACITY (A)	PLUG	RECEPTACLE(S)	
120	60	15 or 20	NEMA 5-15P	NEMA 5-15R	NEMA 5-20R
120	400	15	NEMA 6-15P	NEMA 6-15R	
240	60	15 or 20	NEMA 6-15P	NEMA 6-15R	NEMA 6-20R
120/240	60	30	NEMA 14-30P	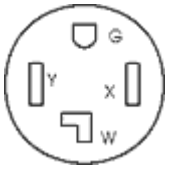 NEMA 14-30R	

VOLTAGE (VAC)	FREQUENCY (HZ)	CIRCUIT AMPACITY (A)	PLUG	RECEPTACLE(S)
120/240	60	50	NEMA 14-50P	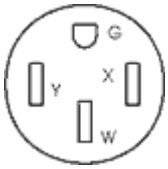 NEMA 14-50R
120/240	60	60	NEMA 14-60P	NEMA 14-60R

B2.1.4 Scientific Laboratory Receptacles. Icebreakers greater than 399 feet in length are outfitted with single phase 240 volt receptacles in the scientific laboratories. These switched receptacles, rated for 30 A, are the preferred source of 240 volt shipboard power and are generally protected by a 30 A circuit breaker.

B2.1.5 Spare Circuit Breakers. Generally, all cutters are outfitted with spare circuit breakers, typically at least one for each distribution system voltage used aboard the ship. When suitable receptacles are not available, one or more spare circuit breakers may be used. Temporarily replacing an installed circuit breaker with a higher ampacity unit is also permissible as long as no part of the shipboard power distribution system will be overloaded. Cords from spare circuit breakers need not exit through connectors or stuffing tubes as long as all circuit breakers on the panel remain operable and no live parts are exposed such that personnel could make inadvertent contact.

B2.1.6 Bus Bars. As a last resort, temporary power may be obtained by temporarily bolting lugged cable directly to switchboard bus bars. Such cable need not exit through stuffing tubes as long as all circuit breakers on the switchboard remain operable and no live parts are exposed such that personnel could make inadvertent contact. The length of cable run between the connection point and the main overcurrent protective device in the Contractor's temporary power distribution system shall be minimized.

B2.2 Shipboard Loads.

B2.2.1 Under this appendix, all loads powered from shipboard receptacles shall physically be located on the cutter or an adjacent floating structure, such as a paint float.

B2.2.2 Shipboard receptacles may be used to power two wire brow lighting strings.

B2.2.3 A tool or piece of equipment that has a low insulation resistance as shown on a shipboard ground detector shall be removed from service and not used again until repaired or replaced.

B3. NOTES

B3.1 Typical Shipboard Loads.

B3.1.1 480 VAC.

- Large blowers
- Strip heaters
- Dehumidifiers

B3.1.2 120 VAC.

- Small power tools
- Small blowers and vacuums
- Test equipment
- Power washers
- Temporary lighting

APPENDIX C

UTILITY POWER FOR SHIPBOARD ELECTRICAL LOADS

C1. SCOPE

C1.1 Intent. This appendix describes the particular requirements for the powering of shipboard Contractor tools and equipment from the dockside utility power distribution system.

C2. REQUIREMENTS

C2.1 Power Sources. Power sources shall be the same as described in Appendix A.

C2.2 Isolation Transformer. An isolation transformer of sufficient power rating to carry the maximum expected load shall be installed between the power source and each cable crossing over to the cutter or adjacent floating structure, such as a paint float. The isolation transformer shall be located ashore and its frame bonded to earth ground. If the neutral of the isolation transformer secondary winding is to be grounded, it shall be bonded only to hull ground.

C3. NOTES

C3.1 Typical Arrangement. See Figure C-1 below for the typical layout of a shore supplied temporary power distribution system for Contractor's shipboard tools and equipment.

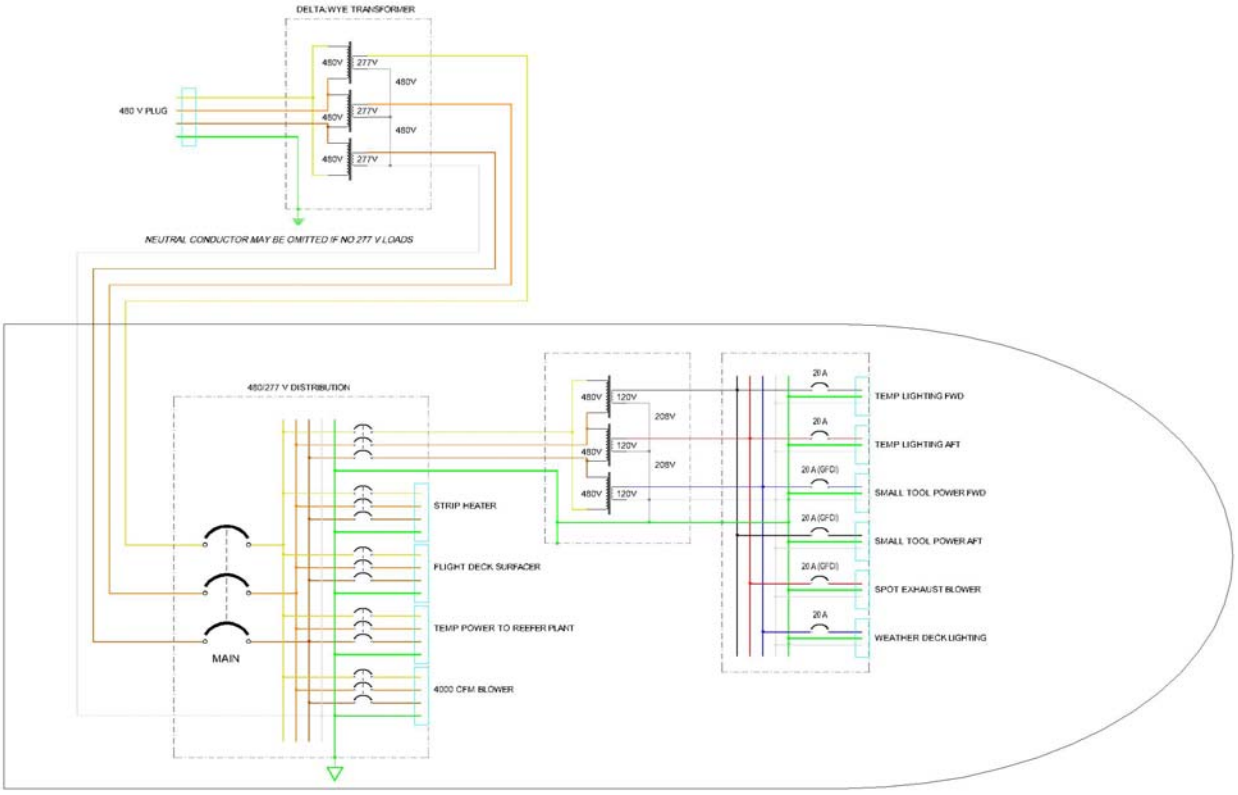

Figure C-1 – Typical Contractor's Shipboard Tool Power Distribution System Fed from Shore

APPENDIX D

SHIPBOARD POWER FOR DOCKSIDE ELECTRICAL LOADS

D1. SCOPE

D1.1 Intent. This appendix describes the particular requirements for the powering of dockside Contractor tools and equipment from the cutter's electrical power distribution system.

D2. REQUIREMENTS

D2.1 Power Sources. Power sources shall be the same as described in Appendix B.

D2.2 Isolation Transformer. An isolation transformer of sufficient power rating to carry the maximum expected load shall be installed between the cutter and each cable crossing to shore. The isolation transformer shall be located afloat and its frame bonded to hull ground. If the neutral of the isolation transformer secondary winding is to be grounded, it shall be bonded only to earth ground.

D3. NOTES

D3.1 Typical Arrangement. See Figure D-1 below for the typical layout of a cutter supplied temporary power distribution system for Contractor's dockside tools and equipment.

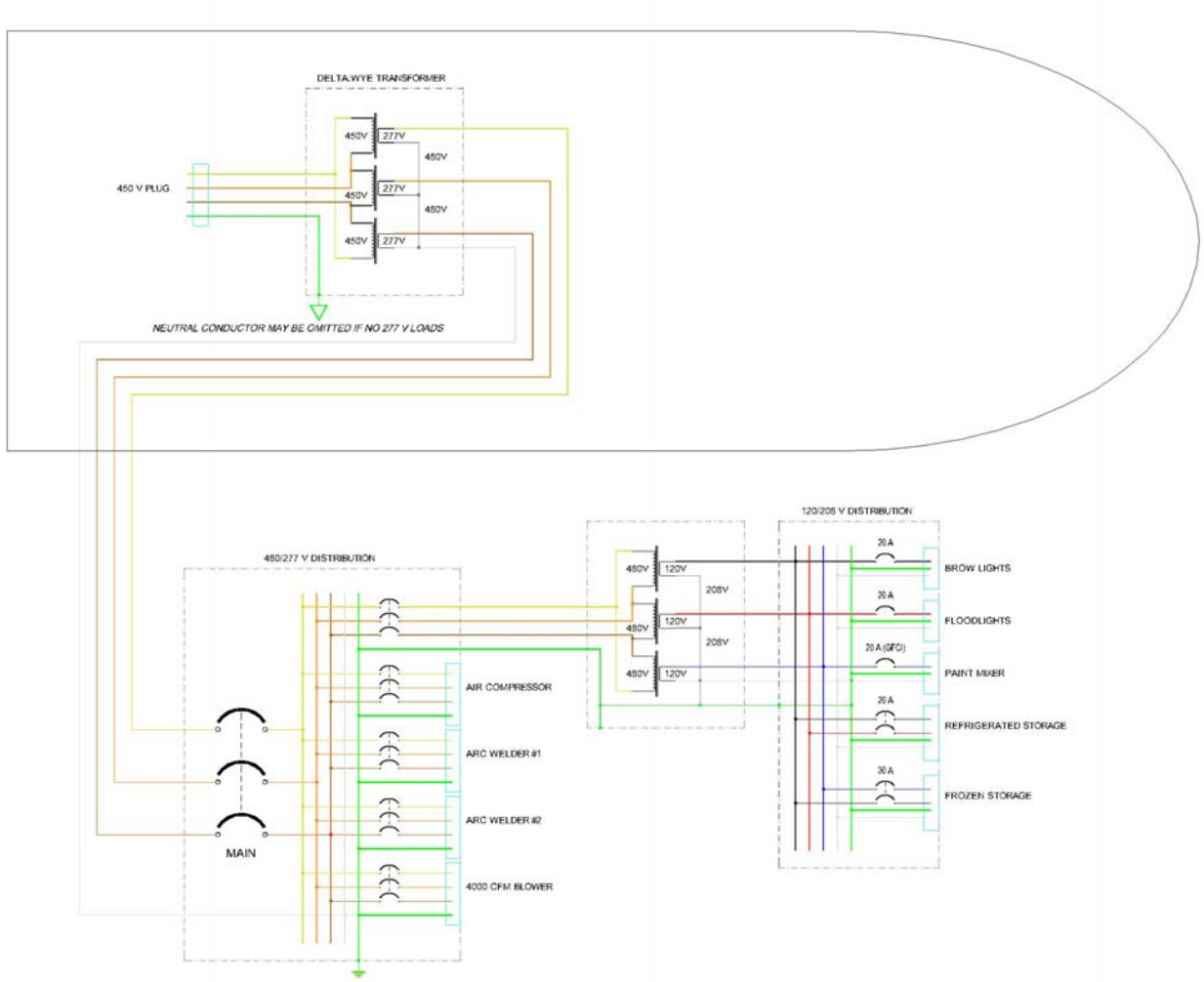

Figure D-1 – Typical Contractor Tool Power Distribution System Fed from Shore

APPENDIX E

GENERATOR POWER FOR DOCKSIDE AND SHIPBOARD ELECTRICAL LOADS

E1. SCOPE

E1.1 Intent. This appendix describes the particular requirements for the powering of Contractor tools and equipment from a temporary diesel generator.

E2. REQUIREMENTS

E2.1 Power Source. The power source shall be a diesel generator of sufficient power rating to carry the maximum expected load. The generator may be grounded or ungrounded, but if it is also used to supply power to the cutter's electrical distribution system, it shall match the shipboard grounding scheme unless an isolation transformer is installed.

E2.2 The generator set may be located ashore or afloat. It may be air or water cooled. Exhaust must not enter any permanent or temporary ventilation system supply air intake and must be directed away from breathing air intakes used by powered respirators or self-contained breathing apparatus compressors.

E2.3 If the generator is to be brought to a non-Contractor owned facility, the Contractor is responsible for meeting noise, weight limitation, access, spill prevention planning, and environmental permitting requirements of the facility owner and the local authorities having jurisdiction.

E2.4 Unenclosed generators shall be posted to warn passersby of potentially hot surfaces.

E2.5 Isolation Transformer. An isolation transformer of sufficient power rating to carry the maximum expected load shall be installed between the power source and each cable crossing between the cutter or adjacent floating structure, such as a paint float, and shore. The isolation transformer shall be located near the generator and its frame bonded to the same grounding reference. If the neutral of the isolation transformer secondary winding is to be grounded, it shall be bonded only to the ground reference where the loads will be located, i.e., earth ground for dockside circuits and hull ground for afloat.

E3. NOTES

E3.1 Typical Arrangements. See Figures E-1 and E-2 below for typical generator supplied temporary power distribution system layouts for Contractor's tools and equipment. Note that a bonding jumper from each main panel grounding bar to a suitable ground must be installed.

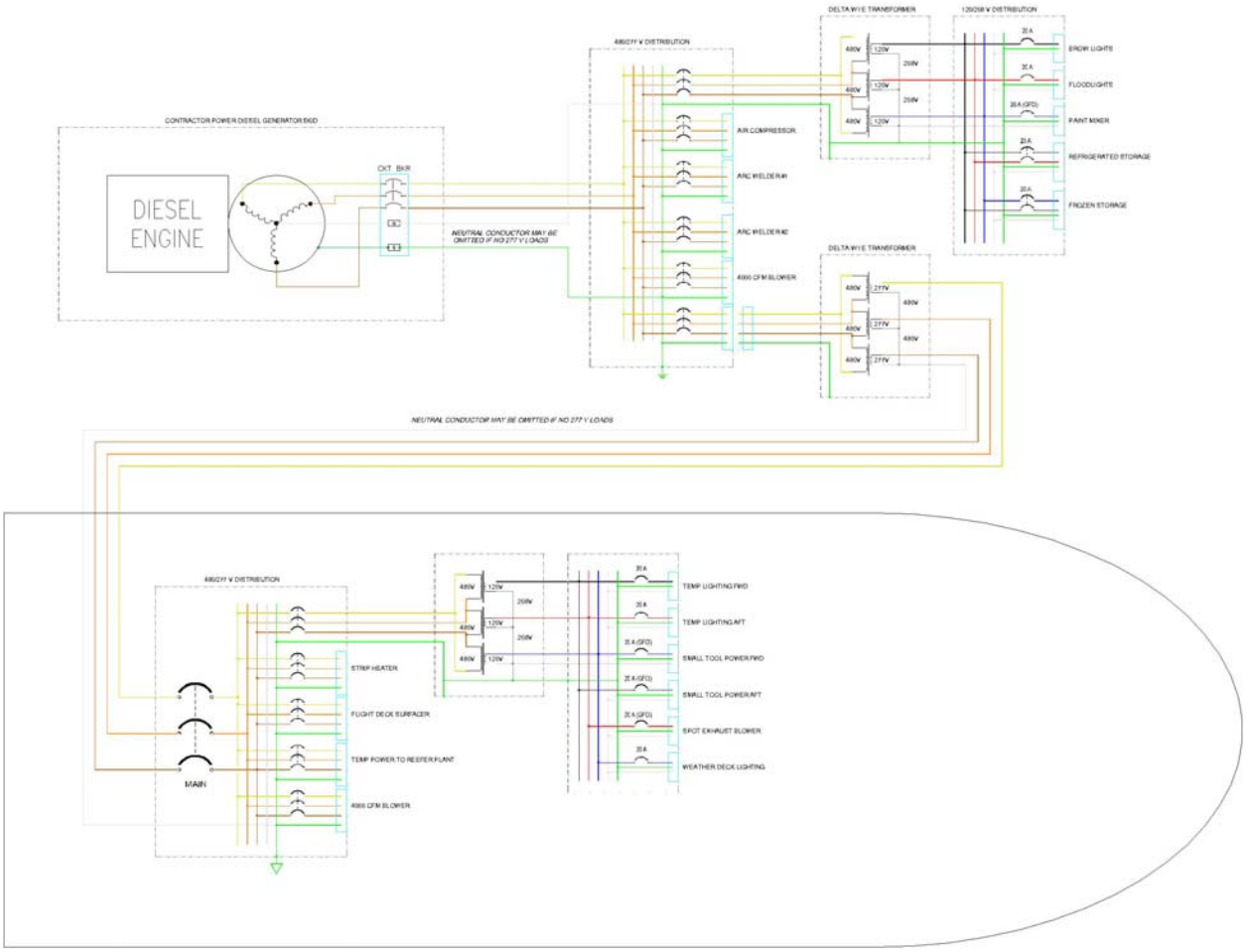

Figure E-1 – Typical Contractor's Tool Power Distribution System Fed from Generator Ashore

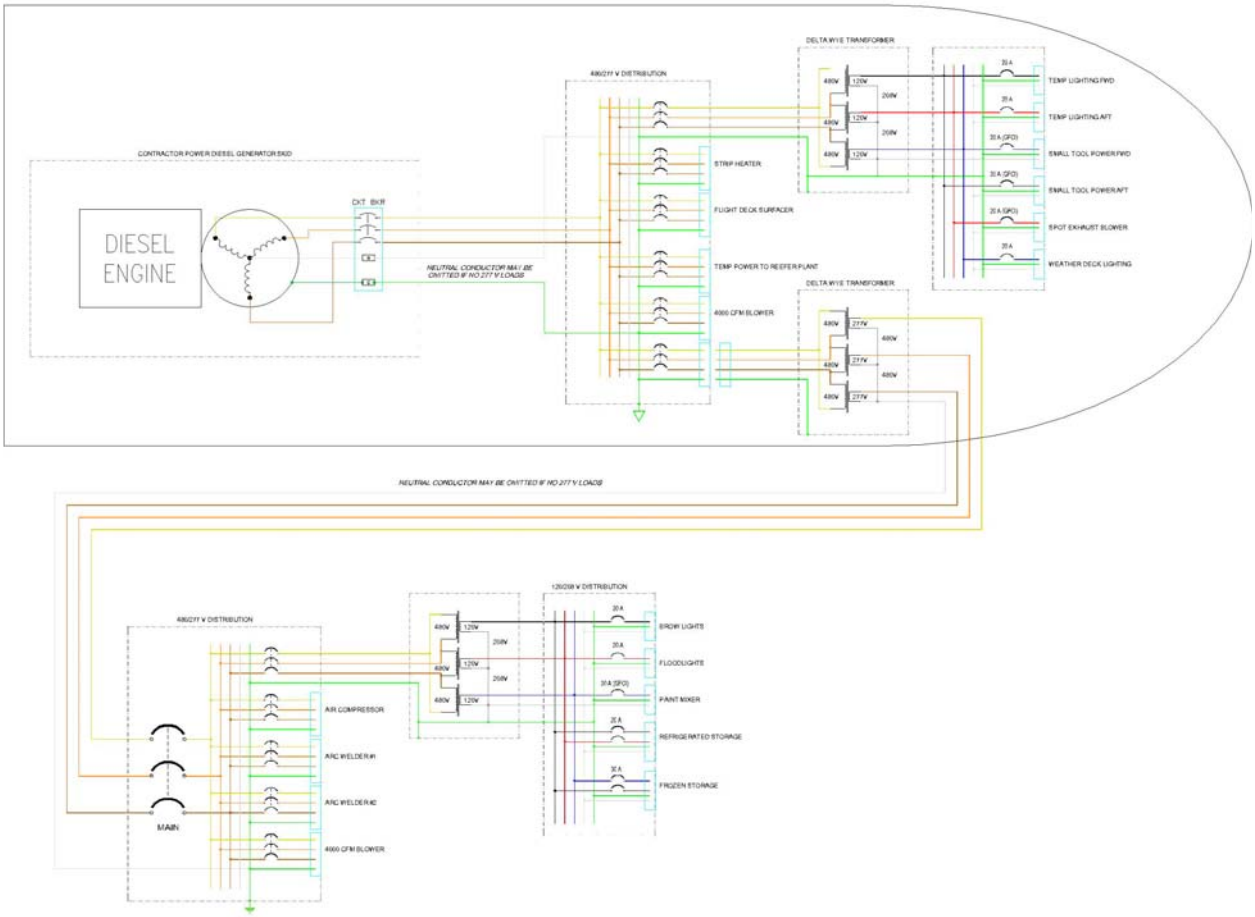

Figure E-2 – Typical Contractor's Tool Power Distribution System Fed from Generator Afloat