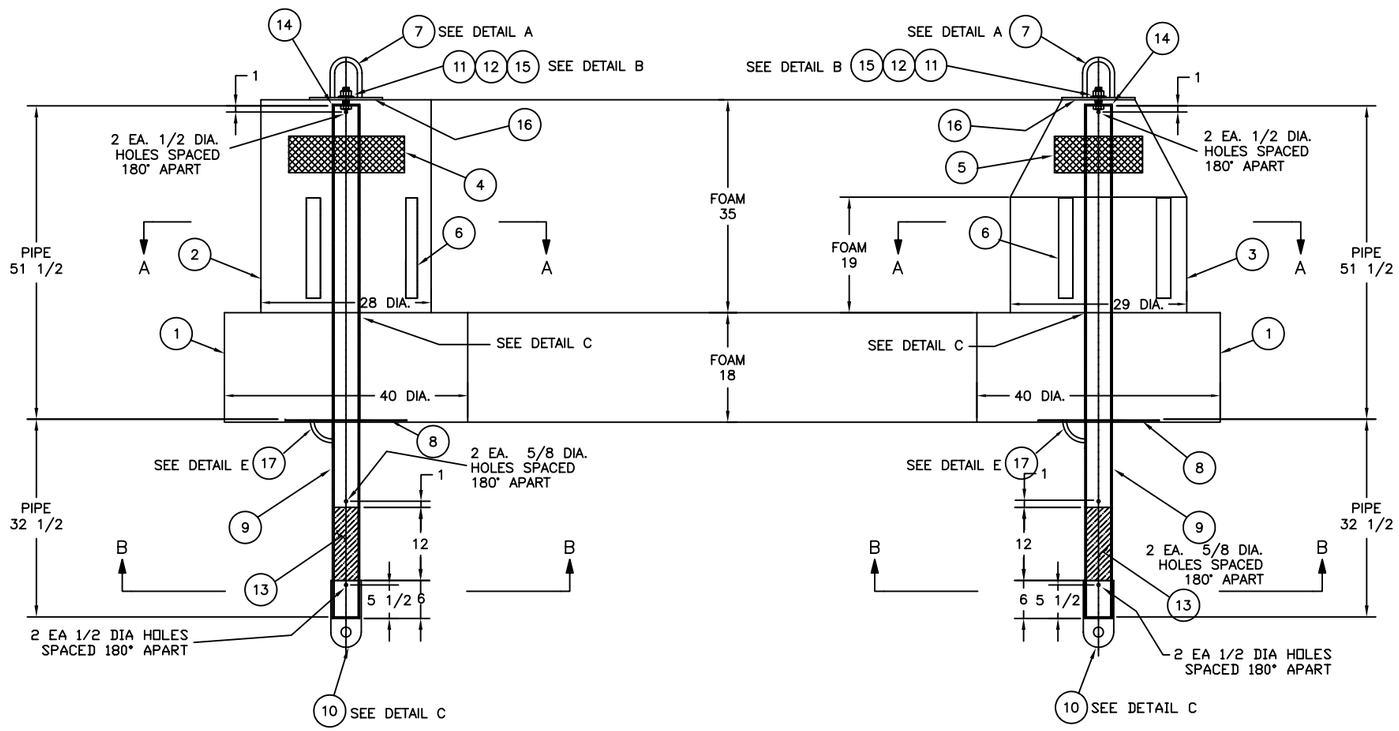

4CFR
SCALE: 1"=1'-0"

4NFR
SCALE: 1"=1'-0"

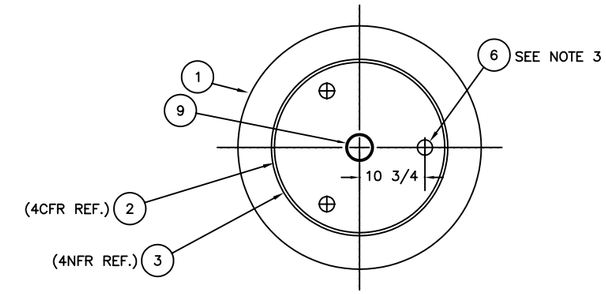

SECTION A–A
SCALE: 1"=1'-0"

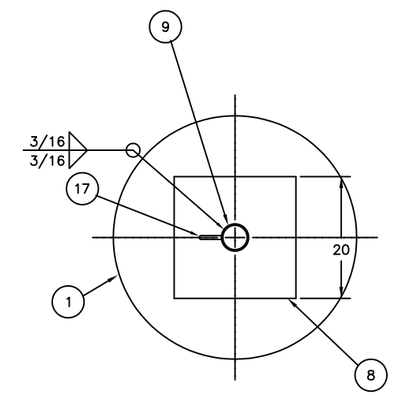

SECTION B–B
SCALE: 1"=1'-0"

REV.	DATE	APPR.	DESCRIPTION	BY
B	1–5–99	S.W.	MOD QTY. FOR ITEM 6. ADDED ITEM 17.	S.M.
A	1–22–97	S.W.	REORGANIZED DRAWING. MODIFIED ITEMS 7, 9, 10, 11, 12, 14, AND 15. ADDED ITEM 16. MODIFIED NOTES 2, AND 5.	C.B.

DESIGNED: D.B.
DRAWN: D.B.
TRACED: S.M.
CHECKED: S.M.
REVIEWED BY: D. Braganza, PROJECT ENGINEER
REVIEWED BY: S. McEvoy, G-ECV-3B
REVIEWED BY: S. D. Walker

U.S. COAST GUARD HEADQUARTERS
CIVIL ENGINEERING

4CFR AND 4NFR UNLIGHTED FOAM BUOYS

APPROVED: L. E. Jaeger, CHIEF OF OCEAN ENGINEERING BRANCH
DATE: 08–30–95

UNLESS OTHERWISE SPECIFIED:
ALL DIMENSIONS ARE IN INCHES.
TOLERANCES: DIM. ±1/8
ANG. ±1°

DRAWING NUMBER: 121168
REV. B
SCALE: AS NOTED
SHEET 1 OF 2

PLOTTING SCALE: 1"=1'-0"

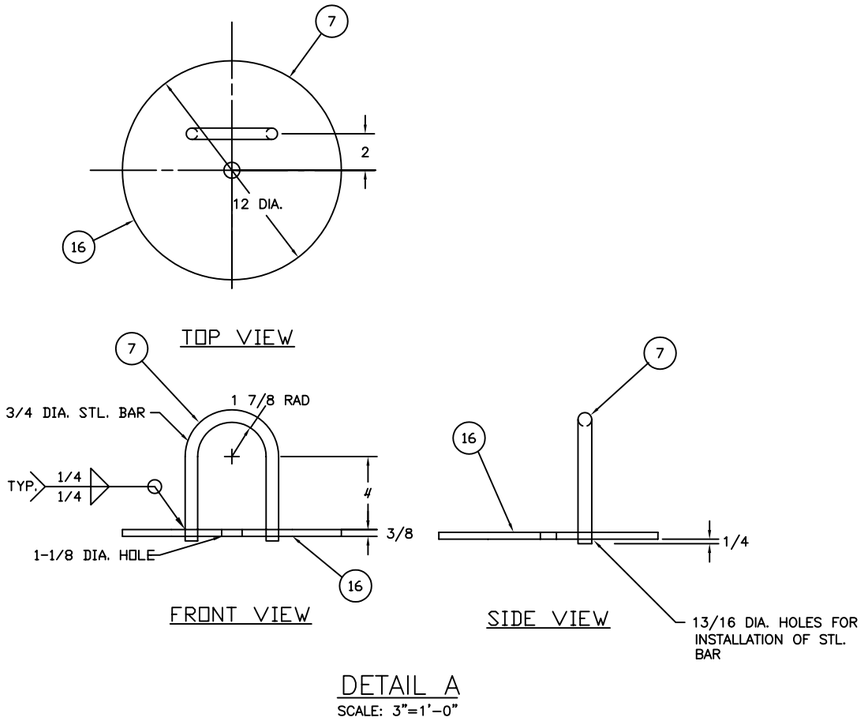

DETAIL A
SCALE: 3"=1'-0"

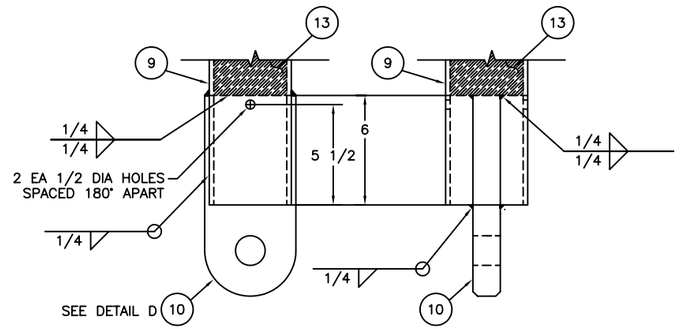

DETAIL C
SCALE: 3"=1'-0"

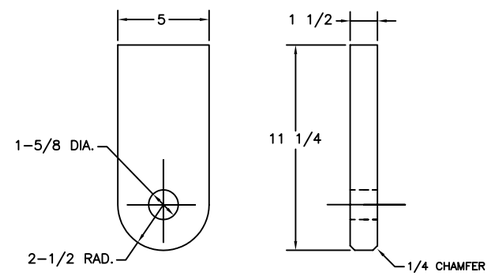

10 DETAIL D
SCALE: 3"=1'-0"

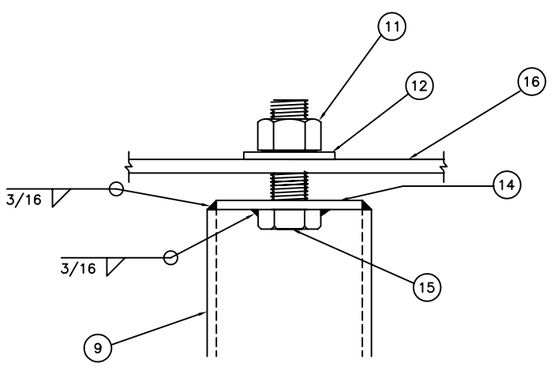

DETAIL B
SCALE: HALF

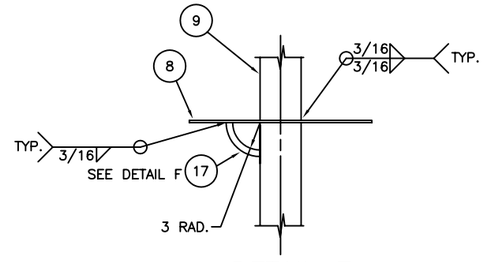

DETAIL E
SCALE: 1-1/2""=1'-0"

BILL OF MATERIALS

ITEM NO.	(CFR) NO. REQ.	(NFR) NO. REQ.	DESCRIPTION	MATL.	REMARKS
1	1	1	BUOY BODY	FOAM	3 PCF, SEE NOTE 1
2	1	–	BUOY TOP (CFR)	FOAM	3 PCF, SEE NOTES 1 - 3
3	–	1	BUOY TOP (NFR)	FOAM	3 PCF, SEE NOTES 1 - 3
4	3	–	RETROREFLECTIVE MATERIAL	---	6x19 SEE NOTE 4
5	–	3	RETROREFLECTIVE MATERIAL	---	6x14-1/2 SEE NOTE 4
6	3	3	RADAR REFLECTOR ASSEMBLY	---	MORBI M3 SEE NOTE 3
7	1	1	LIFTING EYE	STEEL	3/4 BAR, SEE DET. A
8	1	1	BOTTOM PLATE	STEEL	1/4" THK.
9	1	1	CENTER PIPE	STEEL	3 DIA, SCH 40X84"
10	1	1	MOORING EYE	STEEL	1 1/2 THK.
11	1	1	NYLOCK NUT	STAINLESS STEEL	1-8 UNC-2B
12	1	1	WASHER	STAINLESS STEEL	1-NOMINAL DIA.
13	1	1	BALLAST	STEEL	3 O.D. X 12 LG. SOLID STEEL
14	1	1	TUBE SEAL PLATE	STEEL	1/4 THK.
15	1	1	HEX HEAD BOLT	STAINLESS STEEL	1-8 UNC-2BX3 LG
16	1	1	TOP PLATE	STEEL	3/8 PLATE, 12 DIA.
17	1	1	MOORING BAR	STEEL	5/8 DIA.

NOTES:

1. SEE LATEST REVISION OF U.S.C.G. CIVIL ENGINEERING SPECIFICATION No. 450 FOR FABRICATION REQUIREMENTS.

2. CUT HOLES IN ITEMS 2 & 3 TO PERMIT A TIGHT FIGHT WITH ITEM 6. FILL VOID WITH IONOMER FOAM PLUGS.

3. INSTALL ITEM 6, 120 DEGREES APART.

4. INSTALL ITEMS 4 & 5, 120 DEGREES APART AND 6 INCHES FROM THE TOP ON THE BUOY BODY.

5. ITEMS 7, 8, 9, 10, 13, 14, 15, 16, & 17 SHALL BE HOT DIPPED GALVANIZED IN ACCORDANCE WITH THE SPECIFICATION.

REV.	DATE	APPR.	DESCRIPTION	BY
B	1-5-99	S.W.	MOD QTY. FOR ITEM 6. ADDED ITEM 17.	S.M.
A	1-22-97	S.W.	REORGANIZED DRAWING. MODIFIED ITEMS 7, 9, 10, 11, 12, 14, AND 15. ADDED ITEM 16. MODIFIED NOTES 2, AND 5.	C.B.

DESIGNED: D.B.
DRAWN: D.B.
TRACED: S.M.
CHECKED: S.M.

REVIEWED BY: D. Braganza
PROJECT ENGINEER

REVIEWED BY: S. McEvoy
G-ECV-3B

REVIEWED BY: S.D. Walker

U.S. COAST GUARD HEADQUARTERS
CIVIL ENGINEERING

4CFR AND 4 NFR UNLIGHTED FOAM BUOYS

APPROVED: L. E. Jaeger
CHIEF OF OCEAN ENGINEERING BRANCH

DATE 08-30-95

UNLESS OTHERWISE SPECIFIED:
ALL DIMENSIONS ARE IN INCHES.
TOLERANCES: DIM. ±1/8
ANG. ±1°

DRAWING NUMBER 121168 REV. B

SCALE: AS NOTED SHEET 2 OF 2

PLOTTING SCALE: 1-1/2"=1'-0"