ANNEX 3

RESOLUTION MEPC.125(53)

Adopted on 22 July 2005

GUIDELINES FOR APPROVAL OF BALLAST WATER MANAGEMENT SYSTEMS (G8)

THE MARINE ENVIRONMENT PROTECTION COMMITTEE,

RECALLING Article 38(a) of the Convention on the International Maritime Organization concerning the functions of the Marine Environment Protection Committee conferred upon it by the international conventions for the prevention and control of marine pollution,

RECALLING ALSO that the International Conference on Ballast Water Management for Ships held in February 2004 adopted the International Convention for the Control and Management of Ships' Ballast Water and Sediments, 2004 (the Ballast Water Management Convention) together with four Conference resolutions,

NOTING that Regulation A-2 of the Ballast Water Management Convention requires that discharge of ballast water shall only be conducted through Ballast Water Management in accordance with the provisions of the Annex to the Convention,

NOTING FURTHER that Regulation D-3 of the Annex to the Ballast Water Management Convention provides that Ballast Water Management Systems used to comply with this Convention must be approved by the Administration, taking into account Guidelines developed by the Organization,

NOTING ALSO that resolution 1 adopted by the International Conference on Ballast Water Management for Ships invites the Organization to develop these Guidelines as a matter of urgency,

HAVING CONSIDERED the draft Guidelines for Approval of Ballast Water Management Systems developed by the Ballast Water Working Group,

1. ADOPTS the Guidelines for approval of Ballast Water Management Systems, as set out in the Annex to this resolution;

2. INVITES Governments to apply the Guidelines as soon as possible, or when the Convention becomes applicable to them; and

3. AGREES to keep the Guidelines under review.

ANNEX

GUIDELINES FOR APPROVAL OF BALLAST WATER MANAGEMENT SYSTEMS (G8)

Contents

1 INTRODUCTION

General
Goal and purpose
Applicability
Summary of requirements

2 BACKGROUND

3 DEFINITIONS

4 TECHNICAL SPECIFICATIONS

Ballast Water Management Systems
Ballast Water Treatment Equipment
Control and Monitoring Equipment

5 LAND-BASED TESTING REQUIREMENTS FOR APPROVAL OF BALLAST WATER MANAGEMENT SYSTEMS

Ballast Water Treatment Equipment scaling

6 TYPICAL DOCUMENT REQUIREMENTS FOR THE PLAN APPROVAL PROCESS

7 APPROVAL AND CERTIFICATION PROCEDURES

8 INSTALLATION REQUIREMENTS

Sampling facilities

9 INSTALLATION SURVEY AND COMMISSIONING PROCEDURES

ANNEX

PART 1 – SPECIFICATIONS FOR PRE-TEST EVALUATION OF SYSTEM DOCUMENTATION

PART 2 – TEST AND PERFORMANCE SPECIFICATIONS FOR APPROVAL OF BALLAST WATER MANAGEMENT SYSTEMS

PART 3 – SPECIFICATION FOR ENVIRONMENTAL TESTING FOR APPROVAL OF BALLAST WATER MANAGEMENT SYSTEMS

PART 4 – SAMPLE ANALYSIS METHODS FOR THE DETERMINATION OF BIOLOGICAL CONSTITUENTS IN BALLAST WATER

Appendix – TYPE APPROVAL CERTIFICATE OF BALLAST WATER MANAGEMENT SYSTEM

GUIDELINES FOR APPROVAL OF BALLAST WATER MANAGEMENT SYSTEMS (G8)

1 INTRODUCTION

General

1.1 These Guidelines for Approval of Ballast Water Management Systems are aimed primarily at Administrations, or their designated bodies, in order to assess whether ballast water treatment systems meet the standard as set out in Regulation D-2 of the "International Convention for the Control and Management of Ships' Ballast Water and Sediments," hereafter referred to as the "Convention". In addition, this document can be used as guidance for manufacturers and ship owners on the evaluation procedure that equipment will undergo and the requirements placed on Ballast Water Management Systems. These Guidelines should be applied in an objective, consistent and transparent way and their application should be evaluated periodically by the Organization.

1.2 Articles and Regulations referred to in these Guidelines are those contained in the Convention.

1.3 The Guidelines include general requirements concerning design and construction, technical procedures for evaluation and the procedure for issuance of the Type Approval Certificate of the Ballast Water Management System.

1.4 These Guidelines are intended to fit within an overall framework for evaluating the performance of Systems that includes the experimental shipboard evaluation of prototype Systems under the provisions of Regulation D-4, approval of Ballast Water Management Systems and associated systems that comply fully with the requirements of the Convention, and port State control sampling for compliance under the provisions of Article 9 of the Convention.

1.5 The requirements of Regulation D-3 stipulate that Ballast Water Management Systems used to comply with the Convention must be approved by the Administration, taking into account these Guidelines. In addition to such Ballast Water Management System approval, as set forth in Regulation A-2 and Regulation B-3, the Convention requires that discharges of ballast water from ships must meet the Regulation D-2 performance standard on an on-going basis. Approval of a system is intended to screen-out management systems that would fail to meet the standards prescribed in Regulation D-2 of the Convention. Approval of a system, however, does not ensure that a given system will work on all vessels or in all situations. To satisfy the Convention, a discharge must comply with the D-2 standard throughout the life of the vessel.

1.6 The operation of Ballast Water Management Systems should not impair the health and safety of the ship or personnel, nor should it present any unacceptable harm to the environment or to public health.

1.7 Ballast Water Management Systems are required to meet the standards of Regulation D-2 and the conditions established in Regulation D-3 of the Convention. These Guidelines serve to evaluate the safety, environmental acceptability, practicability and biological effectiveness of the systems designed to meet these standards and conditions. The

cost effectiveness of type-approved equipment will be used in determining the need for revisions of these Guidelines.

1.8 These Guidelines contain recommendations regarding the design, installation, performance, testing and approval of Ballast Water Management Systems.

1.9 To achieve consistency in its application, the approval procedure requires that a uniform manner of testing, analysis of samples, and evaluation of results is developed and applied. These Guidelines should be applied in an objective, consistent, and transparent way; and their suitability should be periodically evaluated and revised as appropriate by the Organization. New versions of these Guidelines should be duly circulated by the Organization. Due consideration should be given to the practicability of the Ballast Water Management Systems.

Goal and purpose

1.10 The goal of these Guidelines is to ensure uniform and proper application of the standards contained in the Convention. As such the Guidelines are to be updated as the state of knowledge and technology may require.

1.11 The purpose of these Guidelines is to:

.1 define test and performance requirements for the approval of Ballast Water Management Systems;

.2 assist Administrations in determining appropriate design, construction and operational parameters necessary for the approval of Ballast Water Management Systems;

.3 provide a uniform interpretation and application of the requirements of Regulation D-3;

.4 provide guidance to equipment manufacturers and ship owners in determining the suitability of equipment to meet the requirements of the Convention; and

.5 assure that Ballast Water Management Systems approved by Administrations are capable of achieving the standard of Regulation D-2 in land-based and shipboard evaluations.

Applicability

1.12 These Guidelines apply to the approval of Ballast Water Management Systems in accordance with the Convention.

1.13 These Guidelines apply to Ballast Water Management Systems intended for installation on board all ships required to comply with Regulation D-2.

Summary of requirements

1.14 The land-based and shipboard approval requirements for Ballast Water Management Systems specified in these Guidelines are summarized below.

1.15 The manufacturer of the equipment should submit information regarding the design, construction, operation and functioning of the Ballast Water Management System in accordance with Part 1 of the annex. This information should be the basis for a first evaluation of suitability by the Administration.

1.16 The Ballast Water Management System should be tested for Type Approval in accordance with the procedures described in Parts 2 and 3 of the Annex.

1.17 Successful fulfilment of the requirements and procedures for Type Approval as outlined in Parts 2 and 3 of the Annex should lead to the issuance of a Type Approval Certificate by the Administration.

1.18 When a Type Approved Ballast Water Management System is installed on board, an installation survey according to section 8 should be carried out.

2 BACKGROUND

2.1 The requirements of the Convention relating to approval of Ballast Water Management Systems used by ships are set out in Regulation D-3.

2.2 Regulation D-2 stipulates that ships meeting the requirements of the Convention by meeting the ballast water performance standard must discharge:

.1 less than 10 viable organisms per cubic metre greater than or equal to 50 micrometres in minimum dimension;

.2 less than 10 viable organisms per millilitre less than 50 micrometres in minimum dimension and greater than or equal to 10 micrometres in minimum dimension; and

.3 less than the following concentrations of indicator microbes, as a human health standard:

.1 Toxicogenic *Vibrio cholerae* (serotypes O1 and O139) with less than 1 Colony Forming Unit (cfu) per 100 millilitres or less than 1 cfu per 1 gramme (wet weight) of zooplankton samples;

.2 *Escherichia coli* less than 250 cfu per 100 millilitres; and

.3 Intestinal *Enterococci* less than 100 cfu per 100 millilitres.

3 DEFINITIONS

For the purpose of these Guidelines:

3.1 Active Substance means a substance or organism, including a virus or a fungus that has a general or specific action on or against Harmful Aquatic Organisms and Pathogens.

3.2 Ballast Water Management System (BWMS) means any system which processes ballast water such that it meets or exceeds the Ballast Water Performance Standard in Regulation D-2. The BWMS includes Ballast Water Treatment Equipment, all associated Control Equipment, Monitoring Equipment and Sampling Facilities.

3.3 The Ballast Water Management Plan is the document referred to in Regulation B-1 of the Convention describing the ballast water management process and procedures implemented on board individual ships.

3.4 Ballast Water Treatment Equipment means equipment which mechanically, physically, chemically, or biologically processes, either singularly or in combination, to remove, render harmless, or avoid the uptake or discharge of Harmful Aquatic Organisms and Pathogens within Ballast Water and Sediments. Ballast Water Treatment Equipment may operate at the uptake or discharge of ballast water, during the voyage, or at a combination of these events.

3.5 Control Equipment refers to the installed equipment required to operate and control the Ballast Water Treatment Equipment.

3.6 The Convention means the International Convention for the Control and Management of Ships' Ballast Water and Sediments.

3.7 Monitoring Equipment refers to the equipment installed for the assessment of the effective operation of the Ballast Water Treatment Equipment.

3.8 Sampling Facilities refers to the means provided for sampling treated or untreated ballast water as needed in these Guidelines and in the "Guidelines for Ballast Water Sampling" developed by the Organization.

3.9 Shipboard Testing is a full-scale test of a complete BWMS carried out on board a ship according to Part 2 of the annex to these Guidelines, to confirm that the system meets the standards set by Regulation D-2 of the Convention.

3.10 Treatment Rated Capacity (TRC) is the maximum continuous capacity expressed in cubic metres per hour for which the BWMS is type approved. It states the amount of ballast water that can be treated per unit time by the BWMS to meet the standard in Regulation D-2 of the Convention.

3.11 Land-based Testing is a test of the BWMS carried out in a laboratory, equipment factory or pilot plant including a moored test barge or test ship, according to Parts 2 and 3 of the Annex to these Guidelines, to confirm that the BWMS meets the standards set by Regulation D-2 of the Convention.

3.12 Viable Organisms are organisms and any life stages thereof that are living.

4 TECHNICAL SPECIFICATIONS

4.1 This section details general technical requirements which a BWMS should meet in order to obtain Type Approval.

Ballast Water Management Systems

4.2 The BWMS should not contain or use any substance of a dangerous nature, unless adequate arrangements for storage, application, mitigation, and safe handling, acceptable to the Administration, are provided to mitigate any hazards introduced thereby.

4.3 In case of any failure compromising the proper operation of the BWMS, audible and visual alarm signals should be given in all stations from which ballast water operations are controlled.

4.4 All working parts of the BWMS that are liable to wear or to be damaged should be easily accessible for maintenance. The routine maintenance of the BWMS and troubleshooting procedures should be clearly defined by the manufacturer in the Operating and Maintenance Manual. All maintenance and repairs should be recorded.

4.5 To avoid interference with the BWMS, the following items should be included:

.1 every access of the BWMS beyond the essential requirements of paragraph 4.4, should require the breaking of a seal;

.2 if applicable, the BWMS should be so constructed that a visual alarm is always activated whenever the BWMS is in operation for purposes of cleaning, calibration, or repair, and these events should be recorded by the Control Equipment;

.3 in the event of an emergency, suitable by-passes or overrides to protect the safety of the ship and personnel should be installed; and

.4 any bypass of the BWMS should activate an alarm, and the bypass event should be recorded by the Control Equipment.

4.6 Facilities should be provided for checking, at the renewal surveys and according to the manufacturer's instructions, the performance of the BWMS components that take measurements. A calibration certificate certifying the date of the last calibration check, should be retained on board for inspection purposes. Only the manufacturer or persons authorized by the manufacturer should perform the accuracy checks.

Ballast Water Treatment Equipment

4.7 The Ballast Water Treatment Equipment should be robust and suitable for working in the shipboard environment, should be of a design and construction adequate for the service for which it is intended and should be so installed and protected as to reduce to a minimum any danger to persons on board, due regard being paid to hot surfaces and other hazards. The design should have regard to materials used in construction, the purpose for which the equipment is intended, the working conditions to which it will be subjected and the environmental conditions on board.

4.8 The Ballast Water Treatment Equipment should be provided with simple and effective means for its operation and control. It should be provided with a control system that should be such that the services needed for the proper operation of the Ballast Water Treatment Equipment are ensured through the necessary automatic arrangements.

4.9 The Ballast Water Treatment Equipment should, if intended to be fitted in locations where flammable atmospheres may be present, comply with the relevant safety regulations for such spaces. Any electrical equipment that is part of the BWMS should be based in a non-hazardous area, or should be certified by the Administration as safe for use in a hazardous area. Any moving parts, which are fitted in hazardous areas, should be arranged so as to avoid the formation of static electricity.

Control and Monitoring Equipment

4.10 The BWMS should incorporate Control Equipment that automatically monitors and adjusts necessary treatment dosages or intensities or other aspects of the BWMS of the vessel, which while not directly effecting treatment are nonetheless required for proper administration of the necessary treatment.

4.11 The Control Equipment should incorporate a continuous self-monitoring function during the period in which the BWMS is in operation.

4.12 The Monitoring Equipment should record the proper functioning or failure of the BWMS.

4.13 To facilitate compliance with Regulation B-2, the Control Equipment should also be able to store data for at least 24 months, and should be able to display or print a record for official inspections as required. In the event the Control Equipment is replaced, means should be provided to ensure the data recorded prior to replacement remains available on board for 24 months.

4.14 It is recommended that simple means be provided aboard ship to check on drift by measuring devices that are part of the Control Equipment, repeatability of the Control Equipment devices, and the ability to re-zero the Control Equipment meters.

5 TYPICAL DOCUMENT REQUIREMENTS FOR THE PLAN APPROVAL PROCESS

5.1 The documentation submitted for approval should include at least the following:

.1 a description of the BWMS. The description should include a diagrammatic drawing of the typical or required pumping and piping arrangements, and sampling facilities, identifying the operational outlets for treated ballast water and any waste streams as appropriate and necessary. Special considerations may have to be given to installations intended for ships that have unusual pumping and piping arrangements;

.2 equipment manuals, supplied by manufacturers, containing details of the major components of the BWMS and their operation and maintenance;

.3 a generic operations and technical manual for the complete BWMS. This manual should cover the arrangements, the operation and maintenance of the BWMS as a whole and should specifically describe parts of the BWMS which are not covered by the manufacturer's equipment manuals;

.4 the operations section of the manual including normal operational procedures and procedures for the discharge of untreated water in the event of malfunction of the Ballast Water Treatment Equipment, maintenance procedures, and emergency action necessary for securing the ship;

.5 methods for the conditioning of treated water prior to discharge should be provided, and assessment of discharged water should include a description of the effect of treatment on the ship's ballast water, in particular the nature of any treatment residuals and by-products and the water's suitability for discharge into coastal waters. A description should also be provided of any actions necessary to monitor, and if necessary "condition", treated water prior to discharge in order that it meets applicable water quality regulations;

.6 a description of BWMS side streams (e.g., filtered material, centrifugal concentrate, waste or residual chemicals) including a description of the actions planned to properly manage and dispose of such wastes;

.7 a technical section of the manual including adequate information (description and diagrammatic drawings of the monitoring system and electrical/electronic wiring diagrams) to enable faultfinding. This section should include instructions for keeping a maintenance record;

.8 a technical installation specification defining, *inter alia*, requirements for the location and mounting of components, arrangements for maintaining the integrity of the boundary between safe and hazardous spaces and the arrangement of the sample piping; and

.9 a recommended test and checkout procedure specific to the BWMS. This procedure should specify all the checks to be carried out in a functional test by the installation contractor and should provide guidance for the surveyor when carrying out the on-board survey of the BWMS and confirming the installation reflects the manufacturer's specific installation criteria.

6 APPROVAL AND CERTIFICATION PROCEDURES

6.1 A BWMS which in every respect fulfils the requirements of these Guidelines may be approved by the Administration for fitting on board ships. The approval should take the form of a Type Approval Certificate of BWMS, specifying the main particulars of the apparatus and any limiting conditions on its usage necessary to ensure its proper performance. Such certificate should be issued in the format shown in Appendix 1. A copy of the Type Approval Certificate of BWMS should be carried on board ships fitted with such equipment at all times.

6.2 A Type Approval Certificate of BWMS should be issued for the specific application for which the BWMS is approved, e.g., for specific ballast water capacities, flow rates, salinity or temperature regimes, or other limiting conditions or circumstances as appropriate.

6.3 A Type Approval Certificate of BWMS should be issued by the Administration based on satisfactory compliance with all the test requirements described in Parts 2, 3 and 4 of the Annex.

6.4 An Administration may issue a Type Approval Certificate of BWMS based on separate testing or on testing already carried out under supervision by another Administration.

6.5 The Type Approval Certificate of BWMS should:

.1 identify the type and model of the BWMS to which it applies and identify equipment assembly drawings, duly dated;

.2 identify pertinent drawings bearing model specification numbers or equivalent identification details;

.3 include a reference to the full performance test protocol on which it is based, and be accompanied by a copy of the original test results;

.4 identify if it was issued by an Administration based on a Type Approval Certificate previously issued by another Administration. Such a certificate should identify the Administration that conducted the tests on the BWMS and a copy of the original test results should be attached to the Type Approval Certificate of BWMS.

6.6 An approved BWMS may be Type Approved by other Administrations for use on their vessels. Should equipment approved by one country fail Type Approval in another country, then the two countries concerned should consult one another with a view to reaching a mutually acceptable agreement.

7 INSTALLATION REQUIREMENTS

Sampling facilities

7.1 The BWMS should be provided with sampling facilities so arranged in order to collect representative samples of the ship's ballast water.

7.2 Sampling facilities should in any case be located on the BWMS intake, before the discharging points, and any other points necessary for sampling to ascertain the proper functioning of the equipment as may be determined by the Administration.

8 INSTALLATION SURVEY AND COMMISSIONING PROCEDURES

8.1 Verify that the following documentation is on board in a suitable format:

.1 a copy of the Type Approval Certificate of BWMS;

.2 a statement from the Administration, or from a laboratory authorized by the Administration, to confirm that the electrical and electronic components of the BWMS have been type-tested in accordance with the specifications for environmental testing contained in Part 3 of the Annex;

.3 equipment manuals for major components of the BWMS;

.4 an operations and technical manual for the BWMS specific to the ship and approved by the Administration, containing a technical description of the BWMS, operational and maintenance procedures, and backup procedures in case of equipment malfunction;

.5 installation specifications;

.6 installation commissioning procedures; and

.7 initial calibration procedures.

8.2 Verify that:

.1 the BWMS installation has been carried out in accordance with the technical installation specification referred to in paragraph 8.1.5;

.2 the BWMS is in conformity with the Type Approval Certificate of BWMS issued by the Administration or its representative;

.3 the installation of the complete BWMS has been carried out in accordance with the manufacturer's equipment specification;

.4 any operational inlets and outlets are located in the positions indicated on the drawing of the pumping and piping arrangements;

.5 the workmanship of the installation is satisfactory and, in particular, that any bulkhead penetrations or penetrations of the ballast system piping are to the relevant approved standards; and

.6 the Control and Monitoring Equipment operates correctly.

ANNEX

This annex provides detailed test and performance specifications for a BWMS and contains:

PART 1 – Specifications for Pre-test Evaluation of System Documentation

PART 2 – Test and Performance Specifications for Approval of Ballast Water Management Systems

PART 3 – Specification for Environmental Testing for Approval of Ballast Water Management Systems

PART 4 – Sample Analysis Methods for the Determination of Biological Constituents in Ballast Water

PART 1 – SPECIFICATIONS FOR PRE-TEST EVALUATION OF SYSTEM DOCUMENTATION

1.1 Adequate documentation should be prepared and submitted to the Administration as part of the approval process well in advance of the intended approval testing of a BWMS. Approval of the submitted documentation should be a pre-requisite for carrying out independent approval tests.

General

1.2 Documentation should be provided by the manufacturer/developer for two primary purposes: evaluating the readiness of the BWMS for undergoing approval testing, and evaluating the manufacturer's proposed test requirements and procedures for the test.

Readiness evaluation

1.3 The readiness evaluation should examine the design and construction of the BWMS to determine whether there are any fundamental problems that might constrain the ability of the BWMS to manage ballast water as proposed by the manufacturer, or to operate safely, on board ships. The latter concern should, in addition to basic issues related to the health and safety of the crew, interactions with the ship's systems and cargo, and potential adverse environmental effects, also consider the potential for longer term impacts to the safety of the crew and vessel through effects of the BWMS on corrosion in the ballast system and other spaces.

1.4 The evaluation should also address the degree, if any, to which the manufacturer's/developer's efforts during the research and development phase tested the performance and reliability of the system under operational shipboard conditions and should include a report of the results of those tests.

Test proposal evaluation

1.5 Evaluation of the test proposal should examine all of the manufacturer's stated requirements and procedures for installing, calibrating, and operating (including maintenance requirements) the BWMS during a test. This evaluation should help the test organization to identify any potential health or environmental safety problems, unusual operating requirements (labour or materials), and any issues related to the disposal of treatment by-products or waste streams.

Documentation

1.6 The documentation to be submitted should include at least the following:

.1 **Technical Manual** – The technical description should include:

- product specification;
- process description;
- operational instructions;
- details (including Certificates where appropriate) of the major components and materials used;
- technical installation specifications in accordance with manufacturers' specific installation criteria;
- system limitations; and
- routine maintenance and trouble-shooting procedures;

.2 **BWMS Drawings** – Diagrammatic drawings of the pumping and piping arrangements, electrical/electronic wiring diagrams, which should include reference to any waste streams and sampling points;

.3 **Link to the Ballast Water Management Plan** – Information regarding the characteristics and arrangements in which the equipment is to be installed as well as the scope of the ships (sizes, types and operation) for which the equipment is intended. This information can later form the link between the equipment and the ship's Ballast Water Management Plan; and

.4 **Environmental and Public Health Impacts** – Potential hazards for the environment should be identified and documented based on environmental studies performed to the extent necessary to assure that no harmful effects are to be expected. In the case of Ballast Water Management Systems that make use of Active Substances or Preparations containing one or more Active Substances the procedure described in the "Procedure for the Approval of Ballast Water Management Systems that make use of Active Substances" should be followed. The equipment must then ensure that dosage of the Active Substance and the maximum allowable discharge concentration are kept under the approved criteria at all times.

1.7 The documentation may include specific information relevant to the test set-up to be used for land-based testing according to these Guidelines. Such information should include the sampling needed to ensure proper functioning and any other relevant information needed to ensure proper evaluation of the efficacy and effects of the equipment. The information

provided should also address general compliance with applicable environment, health and safety standards during the Type Approval procedure.

PART 2 – TEST AND PERFORMANCE SPECIFICATIONS FOR APPROVAL OF BALLAST WATER MANAGEMENT SYSTEMS

The Administration decides the sequence of land-based and shipboard testing.

2.1 Quality Assurance and Quality Control Procedures

2.1.1 The testing body performing the tests should have implemented appropriate quality control measures in accordance with recognized international standards acceptable to the Administration.

2.1.2 The approval testing process should contain a rigorous quality control/quality assurance program, consisting of:

.1 Both a Quality Management Plan (QMP) and a Quality Assurance Project Plan (QAPP). Guidance on preparation of these plans, along with other guidance documents and other general quality control information are available from appropriate international organizations[1].

.2 The QMP addresses the quality control management structure and policies of the testing body (including subcontractors and outside laboratories).

.3 The QAPP is a project specific technical document reflecting the specifics of the BWMS to be tested, the test facility, and other conditions affecting the actual design and implementation of the required experiments.

2.2 Shipboard tests

2.2.1 A shipboard test cycle includes:

.1 the uptake of ballast water of the ship;

.2 the storage of ballast water on the ship;

.3 treatment of the ballast water in accordance with paragraph 2.2.2.3 by the BWMS, except in control tanks; and

.4 the discharge of ballast water from the ship.

Success criteria for shipboard testing

2.2.2 In evaluating the performance of BWMS installation(s) on a ship or ships, the following information and results should be supplied to the satisfaction of the Administration:

[1] Such as ISO/IEC 17025.

.1 Test plan to be provided prior to testing.

.2 Documentation that the BWMS is of a capacity within the range of the Treatment Rated Capacity for which it is intended.

.3 The amount of ballast water tested in the test cycle onboard should be consistent with the normal ballast operations of the ship and the BWMS should be operated at the Treatment Rated Capacity for which it is intended to be approved.

.4 Documentation of the results of three consecutive, valid test cycles showing discharge of treated ballast water in compliance with Regulation D-2.

.5 Valid tests are indicated by uptake water, for both the control tank and ballast water to be treated, with viable organism concentration exceeding 10 times the values of Regulation D-2.1 and control tank viable organism concentration exceeding the values of Regulation D-2.1 on discharge.

.6 Sampling regime:

.1 For the control tank:

.1 three replicate samples of influent water, collected over the period of uptake (e.g. beginning, middle, end).

.2 three replicate samples of discharge control water, collected over the period of discharge (e.g. beginning, middle, end).

.2 For treated ballast water:

.1 Three replicate samples of discharge treated water collected at each of three times during the period of discharge (e.g. 3 x beginning, 3 x middle, 3 x end).

.3 Sample sizes are:

.1 For the enumeration of organisms greater than or equal to 50 micrometres or more in minimum dimension, samples of at least one cubic metre should be collected. If samples are concentrated for enumeration the samples should be concentrated using a sieve no greater than 50 micrometres mesh in diagonal dimension.

.2 For the enumeration of organisms greater than or equal to 10 micrometres and less than 50 micrometres in minimum dimension, samples of at least one litre should be collected. If samples are concentrated for enumeration the samples should be concentrated using a sieve no greater than 10 micrometres mesh in diagonal dimension.

.3 For the evaluation of bacteria a sample of at least 500 millilitres should be taken from the influent and treated water.

.7 The test cycles including invalid and unsuccessful test cycles are to span a trial period of not less than six months.

.8 The applicant is requested to perform three consecutive test cycles that comply with Regulation D-2 and which are valid in accordance with paragraph 2.2.2.5. Any invalid test cycle does not affect the consecutive sequence.

.9 The source water for test cycles shall be characterized by measurement of salinity, temperature, particulate organic carbon and total suspended solids.

.10 For system operation throughout the trial period, the following information should also be provided:

.1 documentation of all ballast water operations including volumes and locations of uptake and discharge, and if heavy weather was encountered and where;

.2 the possible reasons for the occurrence of an unsuccessful test cycle, or a test cycle discharge failing the D-2 Standard should be investigated and reported to the Administration;

.3 documentation of scheduled maintenance performed on the system;

.4 documentation of unscheduled maintenance and repair performed on the system;

.5 documentation of engineering parameters monitored as appropriate to the specific system;

.6 documentation of functioning of the control and monitoring equipment.

2.3 Land-based testing

2.3.1 The test set-up including the Ballast Water Treatment Equipment should operate as described in the provided documentation during at least 5 valid replicate test cycles. Each test cycle should take place over a period of at least 5 days.

2.3.2 A land-based test cycle should include:

.1 the uptake of ballast water by pumping;

.2 the storage of ballast water for at least 5 days;

.3 treatment of ballast water within the BWMS, except in control tanks; and

.4 the discharge of ballast water by pumping.

2.3.3 Testing should occur using different water conditions sequentially as provided for in paragraphs 2.3.16 and 2.3.17.

2.3.4 The BWMS should be tested at its rated capacity or as given in paragraphs 2.3.12 to 2.3.14 of Part 2 of the annex to these Guidelines for each test cycle. The equipment should function to specifications during this test.

2.3.5 The analysis of treated water discharge from each test cycle should be used to determine that the average of discharge samples does not exceed the concentrations of Regulation D-2 of the Convention.

Land-based testing objectives, limitations and criteria for evaluation

2.3.6 The land-based testing serves to determine the biological efficacy of the BWMS under consideration for Type Approval. The approval testing aims to ensure replicability and comparability to other treatment equipment.

2.3.7 Any limitations imposed by the Ballast Water Management System on the testing procedure described here should be duly noted and evaluated by the Administration.

Land-based set-up

2.3.8 The test set-up for approval tests should be representative of the characteristics and arrangements of the types of ships in which the equipment is intended to be installed. The test set-up should therefore include at least the following:

.1 the complete BWMS to be tested;

.2 piping and pumping arrangements;

.3 the storage tank that simulates a ballast tank, constructed such that the water in the tank must be completely shielded from light.

2.3.9 The control and treated simulated ballast tanks should each include:

.1 a minimum capacity of 200 m^3;

.2 normal internal structures, including lightening and drainage holes;

.3 standard industry practices for design, construction and surface coatings for ships; and

.4 the minimum modifications required for structural integrity on land.

2.3.10 The test set-up should be pressure-washed with tap water, dried and swept to remove loose debris, organisms and other matter before starting testing procedures, and between test cycles.

2.3.11 The test set-up will include facilities to allow sampling as described in paragraphs 2.3.25 and 2.3.26 and provisions to supply influents to the system, as specified in paragraph 2.3.18 and/or 2.3.19. The installation arrangements must conform in each case with those specified and approved under the procedure outlined in section 7 of the main body to these Guidelines.

Ballast Water Treatment Equipment scaling

2.3.12 In-line treatment equipment may be downsized for land-based testing, but only when the following criteria are taken into account:

.1 equipment with a TRC equal to or smaller than 200 m^3/h should not be downscaled;

.2 equipment with a TRC larger than 200 m^3/h but smaller than 1000 m^3/h may be downscaled to a maximum of 1:5 scale, but may not be smaller than 200 m^3/h; and

.3 equipment with a TRC equal to, or larger than, 1000 m^3/h may be downscaled to a maximum of 1:100 scale, but may not be smaller than 200 m^3/h.

2.3.13 The manufacturer of the equipment should demonstrate by using mathematical modelling and/or calculations, that any downscaling will not affect the ultimate functioning and effectiveness on board a ship of the type and size for which the equipment will be certified.

2.3.14 In-tank treatment equipment should be tested on a scale that allows verification of full scale effectiveness. The suitability of the test set-up should be evaluated by the manufacturer and approved by the Administration.

2.3.15 Larger scaling may be applied and lower flow rates used than provided for in 5.1, if the manufacturer can provide evidence from full-scale shipboard testing and in accordance with 5.2 that scaling and flow rates will not adversely affect the ability of the results to predict full-scale compliance with the standard.

Land-based test design - inlet and outlet criteria

2.3.16 For any given set of test cycles (5 replicates is considered a set) a salinity range should be chosen. Given the salinity, the test water used in the test set up described above should have dissolved and particulate content in one of the following combinations:

	Salinity		
	> 32 PSU	3 – 32 PSU	< 3 PSU
Dissolved Organic Carbon (DOC)	> 1 mg/l	> 5 mg/l	> 5 mg/l
Particulate Organic Carbon (POC)	> 1 mg/l	> 5 mg/l	> 5 mg/l
Total Suspended Solids (TSS)	> 1 mg/l	> 50 mg/l	> 50 mg/l

2.3.17 At least two sets of tests cycles should be conducted, each with a different salinity range and associated dissolved and particulate content as prescribed in paragraph 2.3.12. Tests under adjacent salinity ranges in the above table should be separated by at least 10 PSU[2].

2.3.18 Test organisms may be either naturally occurring in the test water, or cultured species that may be added to the test water. The organism concentration should comply with paragraph 2.3.19 below.

2.3.19 The influent water should include:

.1 test organisms of greater than or equal to 50 micrometres or more in minimum dimension should be present in a total density of preferably 10^6 but not less than 10^5 individuals per cubic metre, and should consist of at least 5 species from at least 3 different phyla/divisions;

.2 test organisms greater than or equal to 10 micrometres and less than 50 micrometres in minimum dimension should be present in a total density of preferably 10^4 but not less than 10^3 individuals per millilitre, and should consist of at least 5 species from at least 3 different phyla/divisions;

.3 heterotrophic bacteria should be present in a density of at least 10^4 living bacteria per millilitre; and

.4 the variety of organisms in the test water should be documented according to the size classes mentioned above regardless if natural organism assemblages or cultured organisms were used to meet the density and organism variety requirements.

2.3.20 The following bacteria do not need to be added to the influent water, but should be measured at the influent and at the time of discharge:

.1 Coliform;

.2 Enterococcus group;

.3 *Vibrio cholerae*; and

.4 Heterotrophic bacteria.

2.3.21 If cultured test organisms are used, then it should be ensured that local applicable quarantine regulations are taken into account during culturing and discharge.

Land-based monitoring and sampling

2.3.22 Change of numbers of test organisms by treatment and during storage in the simulated ballast tank should be measured using methods described in Part 4 of the Annex, paragraphs 4.5 to 4.7.

---

[2] For example, if one set of test cycles is carried out at >32 PSU and a second set at 3-32 PSU, the test cycle in the 3-32 PSU range needs to be at least 10 PSU less than the lowest salinity used in the test cycle in the >32 PSU range.

2.3.23 It should be verified that the treatment equipment performs within its specified parameters, such as power consumption and flow rate, during the test cycle.

2.3.24 Environmental parameters such as pH, temperature, salinity, dissolved oxygen, TSS, DOC, POC and turbidity (NTU)[3] should be measured at the same time that the samples described are taken.

2.3.25 Samples during the test should be taken at the following times and locations: immediately before the treatment equipment, immediately after the treatment equipment and upon discharge.

2.3.26 The control and treatment cycles may be run simultaneously or sequentially. Control samples are to be taken in the same manner as the equipment test as prescribed in paragraph 2.3.25 and upon influent and discharge. A series of examples are included in Figure 1.

2.3.27 Facilities or arrangements for sampling should be provided to ensure representative samples of treated and control water can be taken that introduce as little adverse effects as possible on the organisms.

2.3.28 Samples described in paragraphs 2.3.25 and 2.3.26 should be collected in triplicate on each occasion.

2.3.29 Separate samples should be collected for:

.1 organisms of greater than or equal to 50 micrometres or more in minimum dimension;

.2 organisms greater than or equal to 10 micrometres and less than 50 micrometres in minimum dimension; and

.3 for coliform, enterococcus group, *Vibrio cholerae* and heterotrophic bacteria.

2.3.30 For the comparison of organisms of greater than or equal to 50 micrometres or more in minimum dimension against the D-2 standard, at least 20 litres of influent water and 1 cubic metre of treated water, in triplicate respectively, should be collected. If samples are concentrated for enumeration, the samples should be concentrated using a sieve no greater than 50 micrometres mesh in the diagonal dimension.

2.3.31 For the evaluation of organisms greater than or equal to 10 micrometres and less than 50 micrometres in minimum dimension, at least 1 litre of influent water and at least 10 litres of treated water must be collected. If samples are concentrated for enumeration, the samples should be concentrated using a sieve no greater than 10 micrometres mesh in the diagonal dimension.

2.3.32 For the evaluation of bacteria, at least 500 millilitres of influent and treated water should be collected in sterile bottles.

---

[3] NTU=Nominal Turbidity Unit.

2.3.33 The samples should be analysed as soon as possible after sampling, and analyzed live within 6 hours or treated in such a way so as to ensure that proper analysis can be performed.

2.3.34 The efficacy of a proposed system should be tested by means of standard scientific methodology in the form of controlled experimentation, i.e. "experiments". Specifically, the effect of the BWMS on organism concentration in ballast water should be tested by comparing treated ballast water, i.e. "treated groups", to untreated "control groups", such that:

.1 one experiment should consist of a comparison between control water and treated water. Multiple samples, but at a minimum of three, of control and treated water within a single test cycle should be taken to obtain a good statistical estimate of the conditions within the water during that experiment. Multiple samples taken during a single test cycle should not be treated as independent measures in the statistical evaluation of treatment effect, to avoid "pseudo-replication".

2.3.35 If in any test cycle the average discharge results from the control water is a concentration less than or equal to 10 times the values in Regulation D-2.1, the test cycle is invalid.

2.3.36 Statistical analysis of BWMS performance should consist of t-tests, or similar statistical tests, comparing control and treated water. The comparison between control and treated water will provide a test of unexpected mortality in the control water, indicating the effect of an uncontrolled source of mortality in the testing arrangement.

2.4 Reporting of test results

2.4.1 After approval tests have been completed, a report should be submitted to the Administration. This report should include information regarding the test design, methods of analysis and the results of these analyses.

2.4.2 The results of biological efficacy testing of the BWMS should be accepted if it is shown that the system has met the standard in Regulation D-2 in all test cycles as specified in paragraph 4.7 under land-based testing and shipboard testing as specified in section 2.2 of this Annex.

PART 3 — SPECIFICATION FOR ENVIRONMENTAL TESTING FOR APPROVAL OF BALLAST WATER MANAGEMENT SYSTEMS

Test specifications

3.1 The electrical and electronic sections of BWMS in the standard production configuration should be subjected to the programme of environmental tests set out in this specification at a laboratory approved for the purpose by the Administration or by the competent authority of the manufacturer's home country.

3.2 Evidence of successful compliance with the environmental tests below should be submitted to the Administration by the manufacturer together with the application for type approval.

Test specification details

3.3 Equipment should operate satisfactorily on completion of each of the operating environment tests listed below.

Vibration tests

3.4 A resonance search should be made over the following ranges of oscillation frequency and amplitude:

.1 2 to 13.3 Hz with a vibration amplitude of 1 mm; and

.2 13.2 to 80 Hz with an acceleration amplitude of 0.7 g.

This search should be made in each of the three orthogonal planes at a rate sufficiently low to permit resonance detection.

3.5 The equipment should be vibrated in the above mentioned planes at each major resonant frequency for a period of two hours.

3.6 In the absence of any resonant frequency, the equipment should be vibrated in each of the planes at 30 Hz with an acceleration of 0.7 g for a period of two hours.

3.7 After completion of the tests specified in paragraph 3.5 or 3.6 a search should again be made for resonance and there should be no significant change in the vibration pattern.

Temperature tests

3.8 Equipment that may be installed in exposed areas on the open deck, or in an enclosed space not environmentally controlled should be subjected, for a period of not less than two hours, to:

.1 a low temperature test at -25°C; and

.2 a high temperature test at 55°C.

3.9 Equipment that may be installed in an enclosed space that is environmentally controlled including an engine-room, should be subjected, for a period of not less than two hours, to:

.1 a low temperature test at 0°C; and

.2 a high temperature test at 55°C.

3.10 At the end of each of the tests referred to in the subparagraphs above, the equipment should be switched on and it should function normally under the test conditions.

Humidity tests

3.11 Equipment should be left switched off for a period of two hours at a temperature of 55°C in an atmosphere with a relative humidity of 90%. At the end of this period, the

equipment should be switched on and should operate satisfactorily for one hour under the test conditions.

Tests for protection against heavy seas

3.12 Equipment that may be installed in exposed areas on the open deck should be subjected to tests for protection against heavy seas in accordance with IP 56 of publication IEC 529 or its equivalent.

Fluctuation in power supply

3.13 Equipment should operate satisfactorily with:

.1 a voltage variation of +/- 10% together with a simultaneous frequency variation of +/- 5%; and

.2 a transient voltage of +/- 20% together with a simultaneous frequency transient of +/- 10%, with a transient recovery time of three seconds.

Inclination test

3.14 The BWMS should be designed to operate when the ship is upright and when inclined at any angle of list up to and including 15° either way under static conditions and 22.5° under dynamic conditions (rolling) either way and simultaneously inclined dynamically (pitching) 7.5° by bow or stern. The Administration may permit deviation from these angles, taking into consideration the type, size and service conditions of the ship and operational functioning of the equipment. Any deviation permitted is to be documented in the Type Approval Certificate.

Reliability of electrical and electronic equipment

3.15 The electrical and electronic components of the equipment should be of a quality guaranteed by the manufacturer and suitable for their intended purpose.

PART 4 – SAMPLE ANALYSIS METHODS FOR THE DETERMINATION OF BIOLOGICAL CONSTITUENTS IN BALLAST WATER

Sample processing and analysis

4.1 Samples taken during testing of BWMS are likely to contain a wide taxonomic diversity of organisms, varying greatly in size and susceptibilities to damage from sampling and analysis.

4.2 When available, widely accepted standard methods for the collection, handling (including concentration), storage, and analysis of samples should be used. These methods should be clearly cited and described in test plans and reports. This includes methods for detecting, enumerating, and identifying organisms and for determining viability (as defined in these Guidelines).

4.3 When standard methods are not available for particular organisms or taxonomic groups, methods that are developed for use should be described in detail in test plans and reports. The

descriptive documentation should include any experiments needed to validate the use of the methods.

4.4 Given the complexity in samples of natural and treated water, the required rarity of organisms in treated samples under Regulation D-2, and the expense and time requirements of current standard methods, it is likely that several new approaches will be developed for the analyses of the composition, concentration, and viability of organisms in samples of ballast water. Administrations/Parties are encouraged to share information concerning methods for the analysis of ballast water samples, using existing scientific venues, and papers distributed through the Organization.

Sample analysis

4.5 Sample analysis is meant to determine the species composition and the number of viable organisms in the sample. Different samples may be taken for determination of viability and for species composition.

4.6 Viability of an organism can be determined through live/dead judgement by appropriate methods including, but not limited to: morphological change, mobility, staining using vital dyes or molecular techniques.

4.7 A treatment test cycle should be deemed successful if:

.1 it is valid in accordance with paragraph 2.2.2.5 or 2.3.35 as appropriate;

.2 the average density of organisms greater than or equal to 50 micrometres in minimum diameter in the replicate samples is less than 10 viable organisms per cubic metre;

.3 the average density of organisms less than 50 micrometres and greater than or equal to 10 micrometres in minimum diameter in the replicate samples is less than 10 viable organisms per millilitre;

.4 the average density of *Vibrio cholerae* (serotypes O1 and O139) is less than 1 cfu per 100 millilitres, or less than 1 cfu per 1 gramme (wet weight) zooplankton samples;

.5 the average density of E. coli in the replicate samples is less than 250 cfu per 100 millilitres; and

.6 the average density of intestinal Enterococci in the replicate samples is less than 100 cfu per 100 millilitres.

4.8 It is recommended that a non-exhaustive list of standard methods and innovative research techniques be considered[4].

[4] Suggested sources may include but not be limited to:

.1 The Handbook of Standard Methods For the Analysis of Water and Waste Water
.2 ISO standard methods
.3 UNESCO standard methods
.4 World Health Organization
.5 American Society of Testing and Materials (ASTM) standard methods
.6 U.S. EPA standard methods
.7 Research papers published in peer-reviewed scientific journals
.8 MEPC papers.

APPENDIX

BADGE OR CIPHER *NAME OF ADMINISTRATION*

TYPE APPROVAL CERTIFICATE OF BALLAST WATER MANAGEMENT SYSTEM

This is to certify that the Ballast Water Management System listed below has been examined and tested in accordance with the requirements of the specifications contained in the Guidelines contained in IMO resolution MEPC...(..). This certificate is valid only for the Ballast Water Management System referred to below.

Ballast Water Management System supplied by .....

Under type and model designation .....
and incorporating:

Ballast Water Management System manufactured by .....

to equipment/assembly drawing No. ..... date .....

Other equipment manufactured by .....

to equipment/assembly drawing No. ..... date .....

Treatment Rated Capacity ..... m^3/h

A copy of this Type Approval Certificate, should be carried on board a vessel fitted with this Ballast Water Management System at all times. A reference to the test protocol and a copy of the test results should be available for inspection on board the vessel. If the Type Approval Certificate is issued based on approval by another Administration, reference to that Type Approval Certificate shall be made.

Limiting Conditions imposed are described in the appendix to this document.

Official stamp Signed .....

Administration of .....

Dated this ..... day of ..... 20.....

Enc. Copy of the original test results.

Figure 1 Diagrammatic arrangement of possible land-based tests

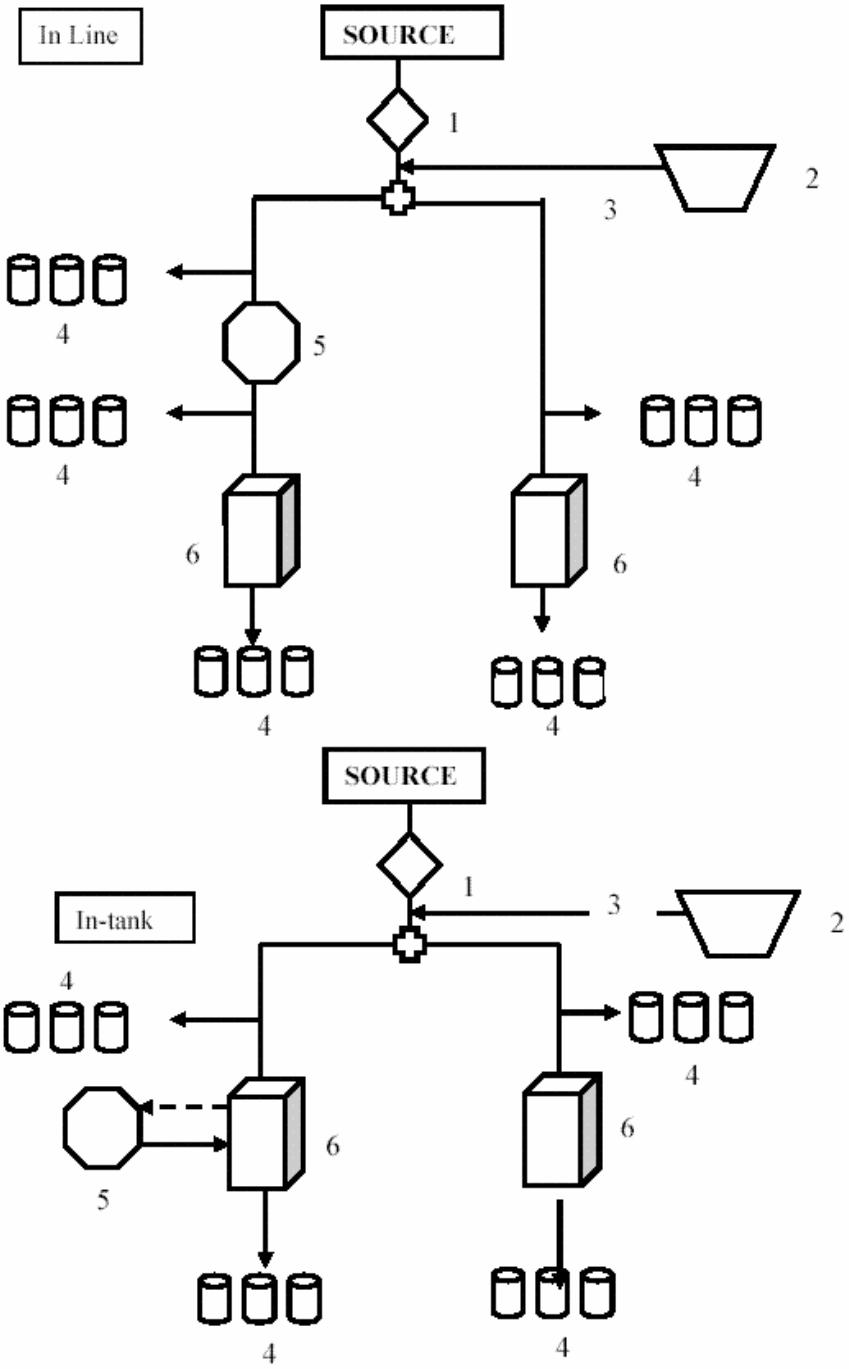

1. Pump
2. Feed Tank
3. Feed Line
4. Sample tanks
5. Treatment System
6. Simulated Ballast Water Tank

***