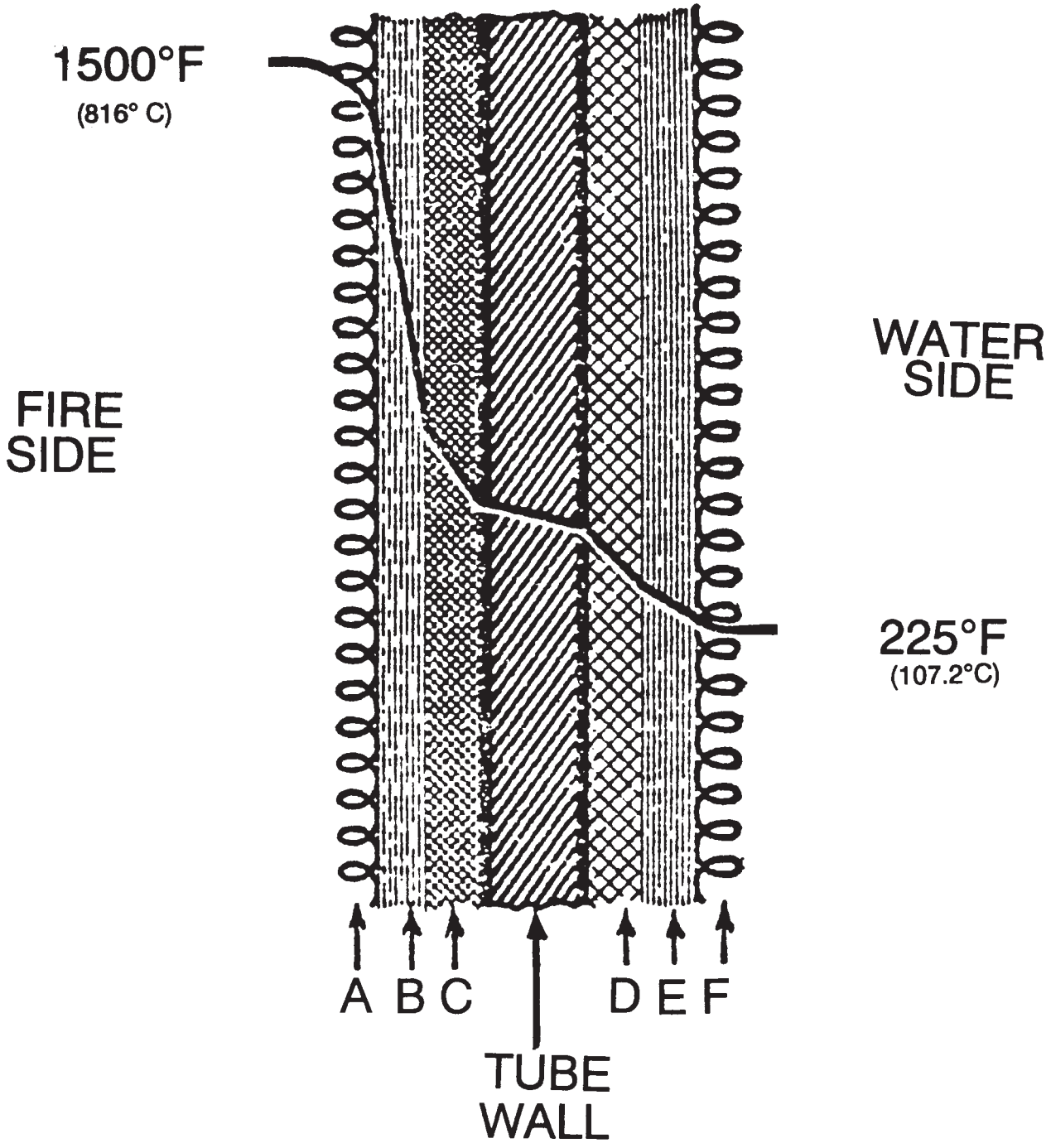
1500°F
(816° C)
FIRE SIDE
WATER SIDE
225°F
(107.2°C)
A B C
D E F
TUBE WALL

SG-0018

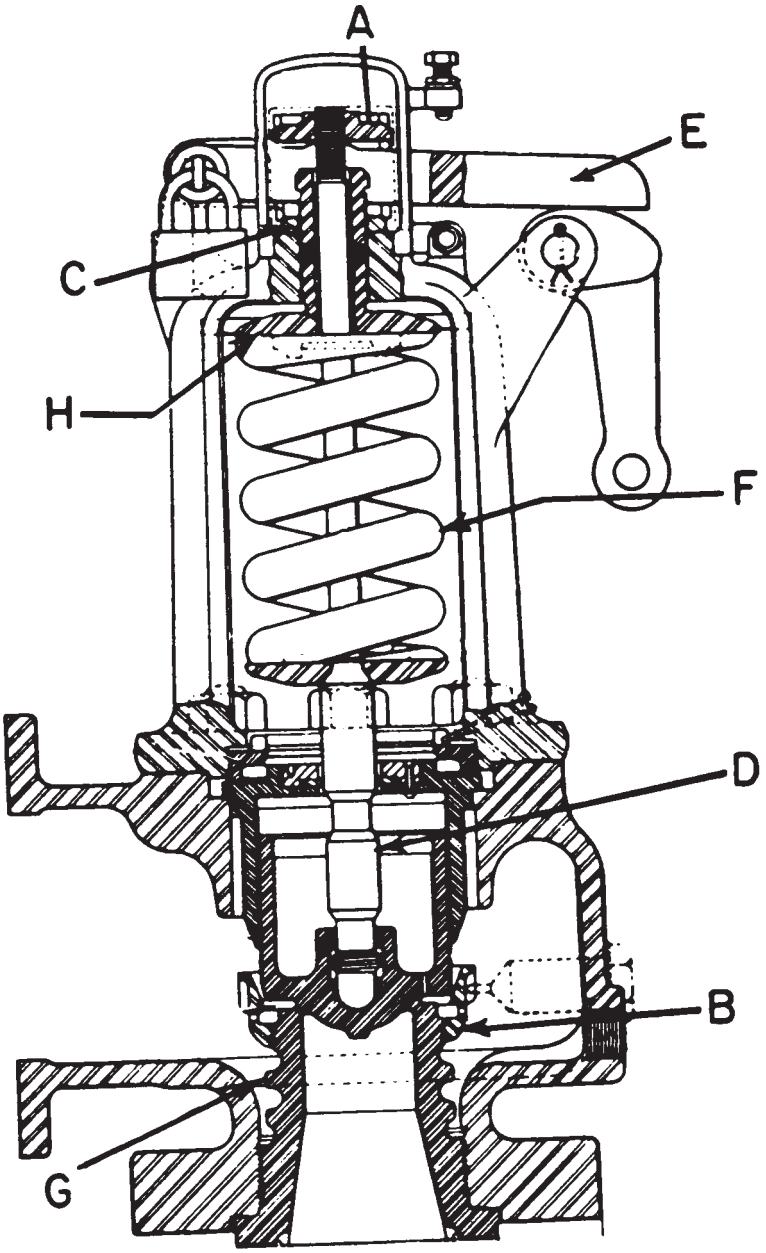

SG-0019

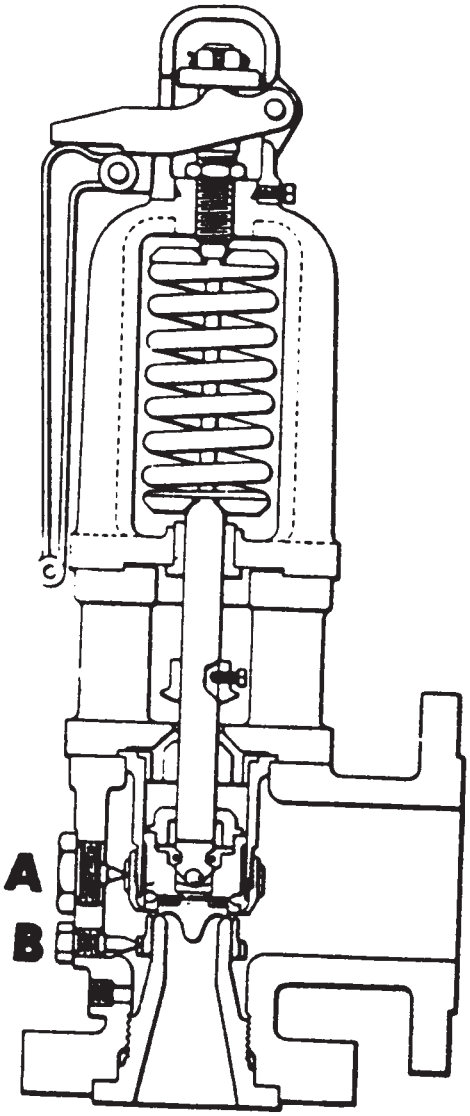

SG-0020

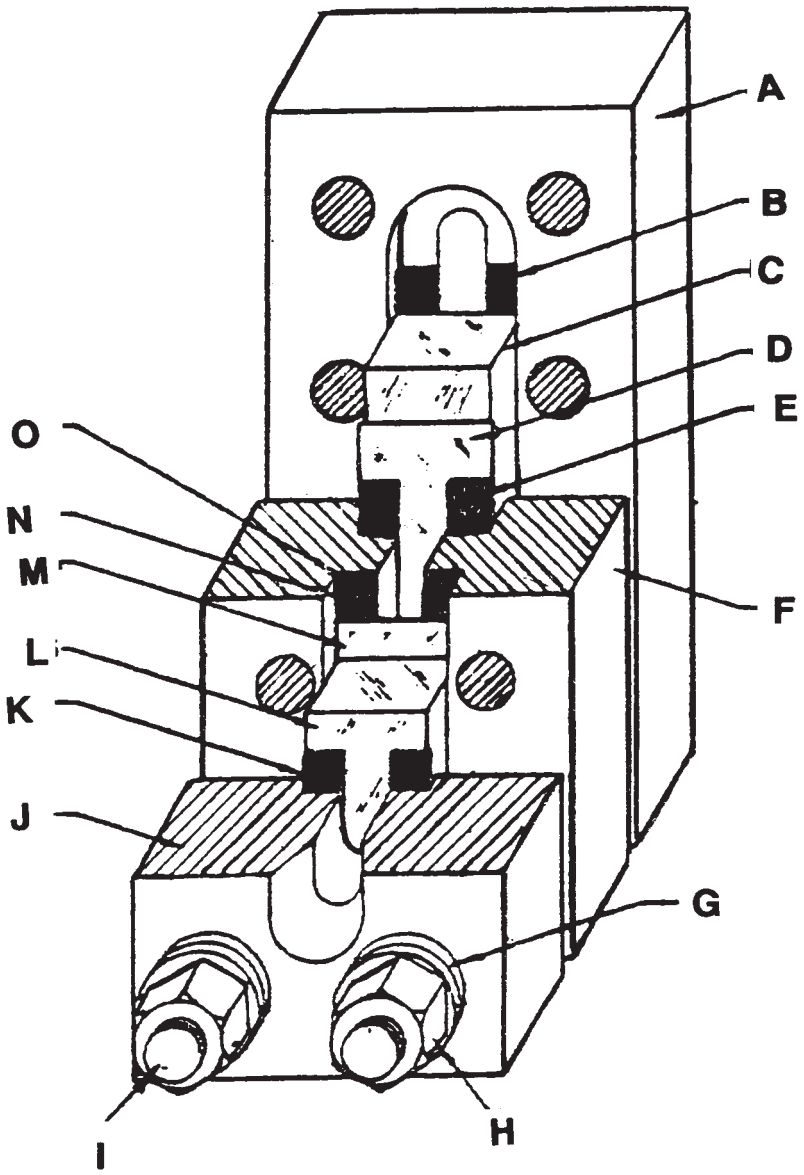

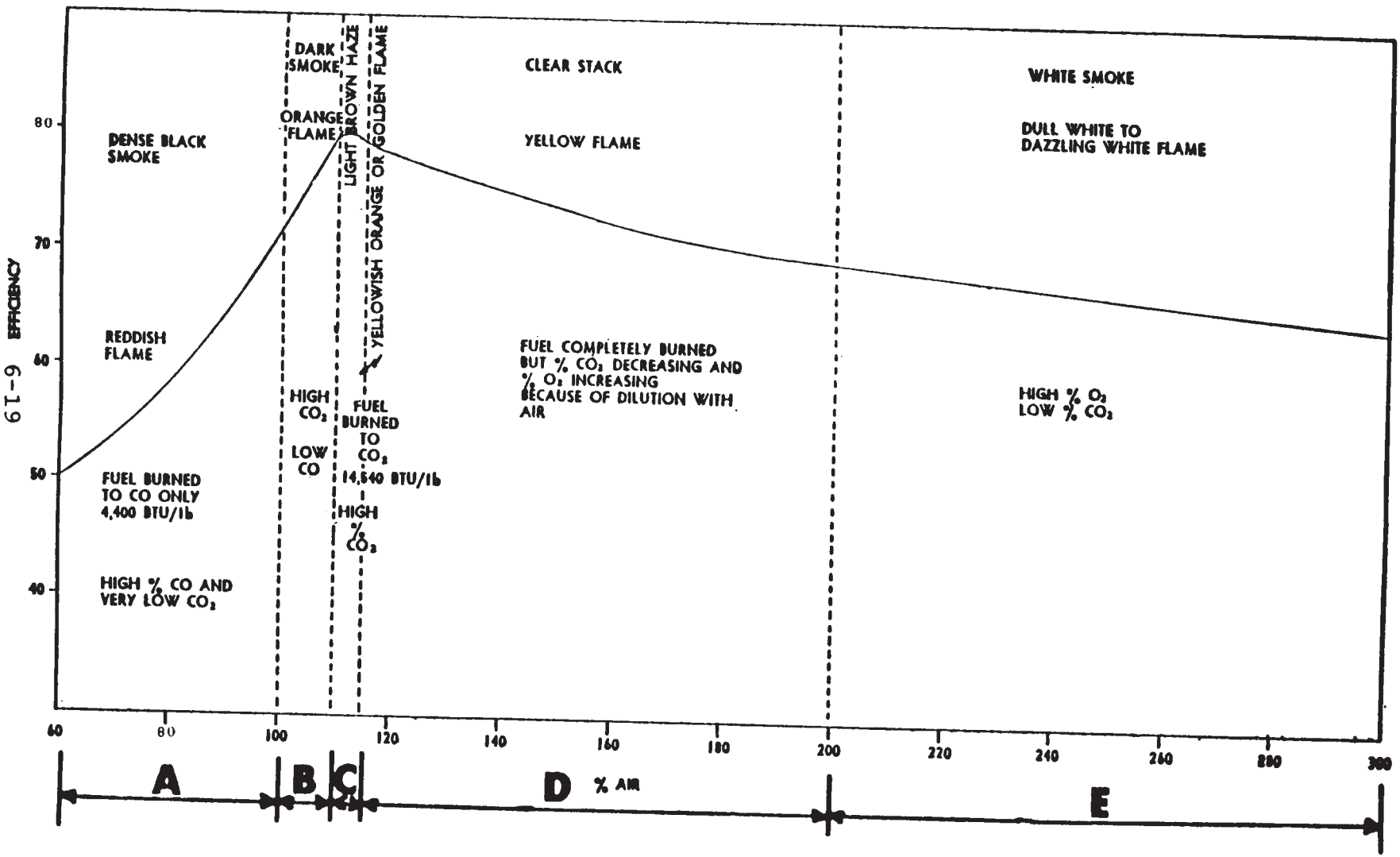
EFFICIENCY
80
70
60
50
40
DENSE BLACK SMOKE
REDDISH FLAME
FUEL BURNED TO CO ONLY 4,400 BTU/lb
HIGH % CO AND VERY LOW CO_2
DARK SMOKE
ORANGE FLAME
HIGH CO_2
LOW CO
LIGHT BROWN HAZE
YELLOWISH ORANGE OR GOLDEN FLAME
FUEL BURNED TO CO_2 14,540 BTU/lb
HIGH % CO_2
CLEAR STACK
YELLOW FLAME
FUEL COMPLETELY BURNED BUT % CO_2 DECREASING AND % O_2 INCREASING BECAUSE OF DILUTION WITH AIR
WHITE SMOKE
DULL WHITE TO DAZZLING WHITE FLAME
HIGH % O_2 LOW % CO_2
60
80
100
120
140
160
180
200
220
240
260
280
300
% AIR
A
B
C
D
E

SG-0021

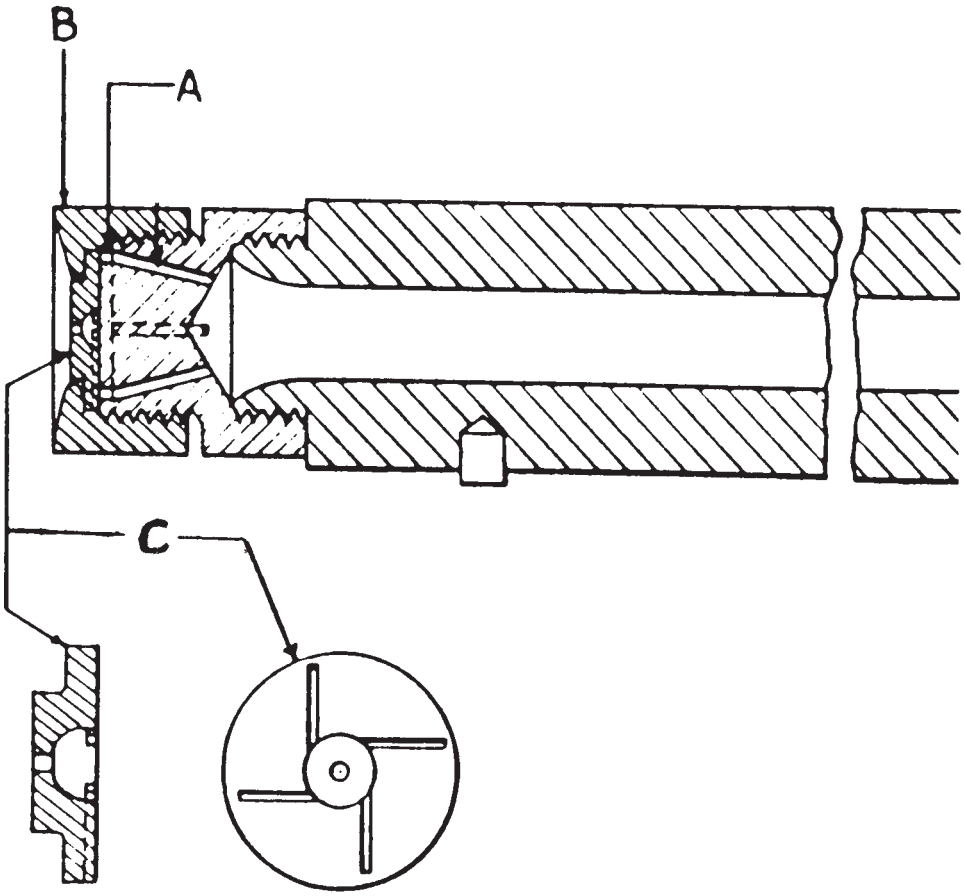

38T08

SG-0023

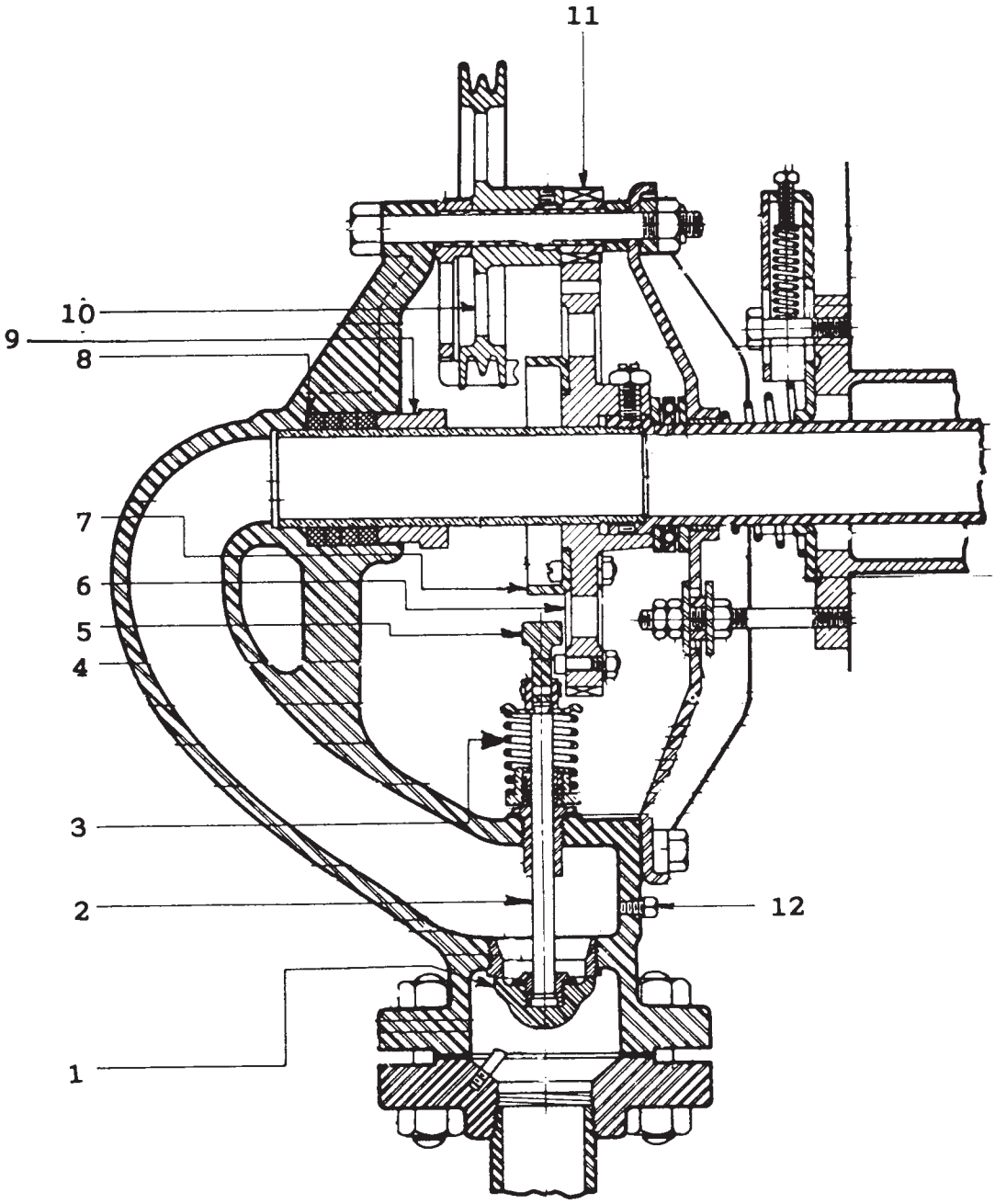

SG-0024

FLOWS AND VELOCITIES							
SYM	SIZE IN.	NOM. PRESS.	VEL. FT/SEC	FLOW LB/HR	CONDITION	SERVICE
A	3	35	78.2	1700	MAX. HEATING REQUIREMENT	STM. TO GALLEY, LAV. & SHIP HEATING
B	6	67	203	22610	MAXIMUM	I P TURBINE BLEED
C	4	67	267	13070	MAXIMUM	I P BLEED TO EXH. MN.
D	5	67	124	9540	ABS MAX. POWER	2 BOILER-AIR HEATERS
E	3½	67	125	4770	ABS MAX. POWER	1 BOILER-AIR HEATER
F	12	13.6 PSIA	190	19420	RATED	L.P. TURBINE BLEED
G	8	13.6 PSIA	160	7220	RATED	L.P. BLEED TO DISTIL. PLANT
H	10	13.6 PSIA	171	12200	RATED	L.P. BLEED TO FIRST STAGE FEED HEATER
J	4	35	418	13070	MAXIMUM	I P BLEED TO EXH. MN.
K	6	35	130	11000	RATED	EXH. - 1 MN. FD. PUMP
L	8	35	106	14230	ABS MAX. POWER	EXH. TO DFT.
M	5	33	128	7220	RATED	EXH. TO DISTL. PLANT
N	4	35	105	4309	STAND-BY	EXH. UNLOAD TO DUMP VALVE
P	5	35	130	7297	ASTERN	EMER. EXH. TO BLR. AIR HEATERS-
R	3	35	92.2	2000	MAX. HEATING REQUIREMENT	STM. TO H.W. HTR. GALLEY, LAV. & SHIP HEATING
S	3	35	92.2	2000	MAX. HEATING REQUIREMENT	SHORE STM. TO H.W. HTR. GALLEY, LAV. & SHIP HTG.
T	1½	35	67.2	300	RATED	STM. TO H.W. HEATER

* PSIG EXCEPT AS NOTED

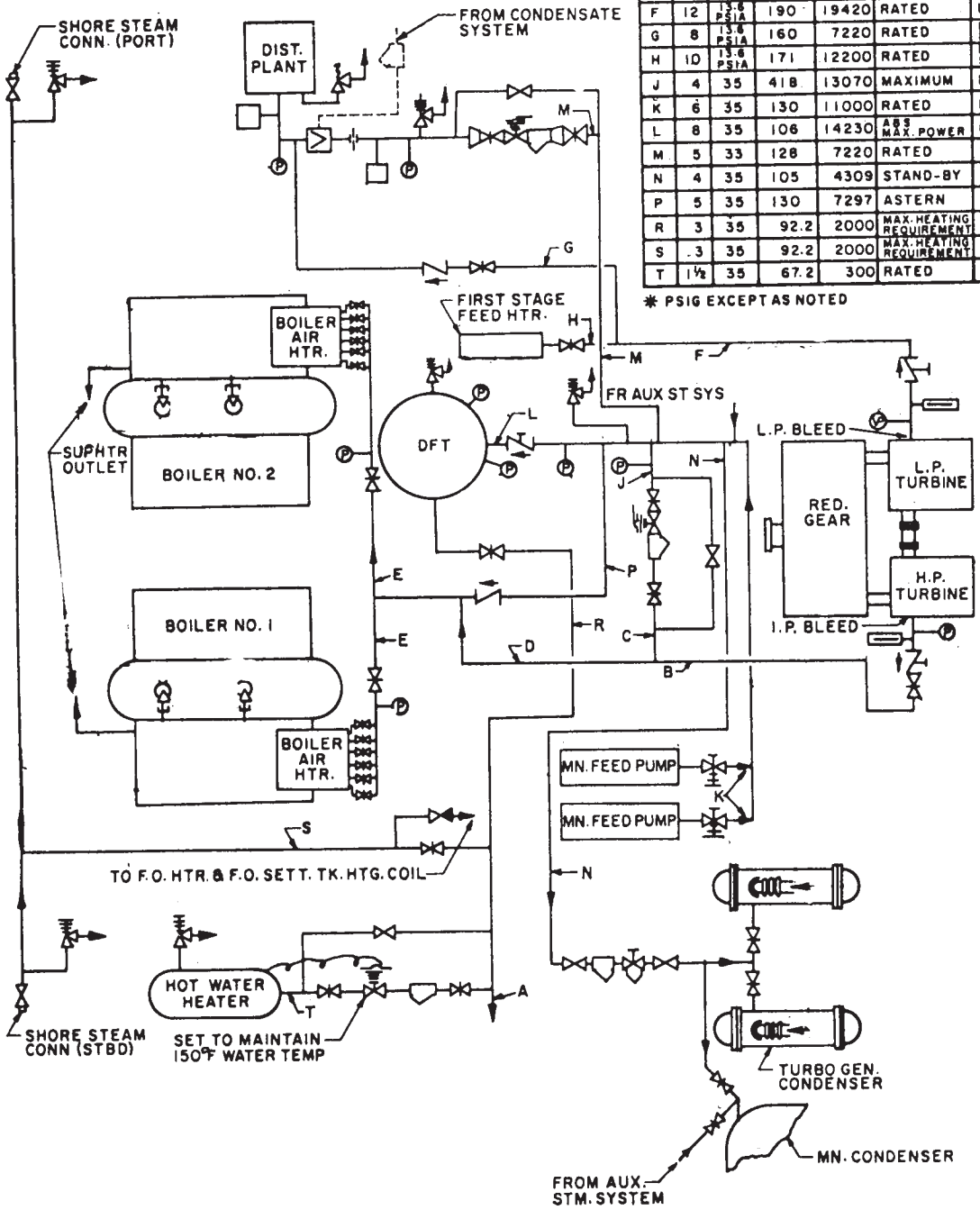

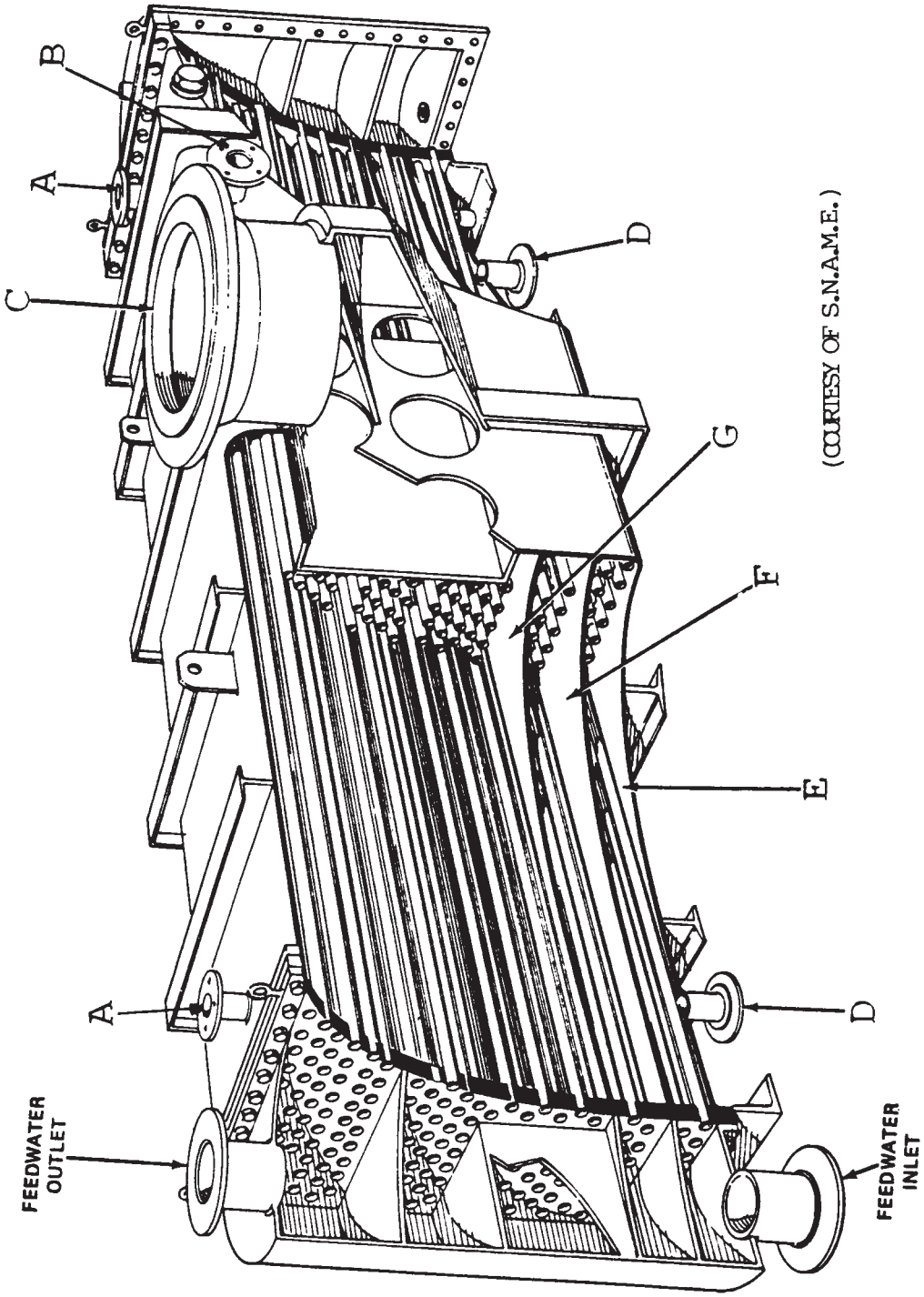

(COURTESY OF S.N.A.M.E.)