SE-0001

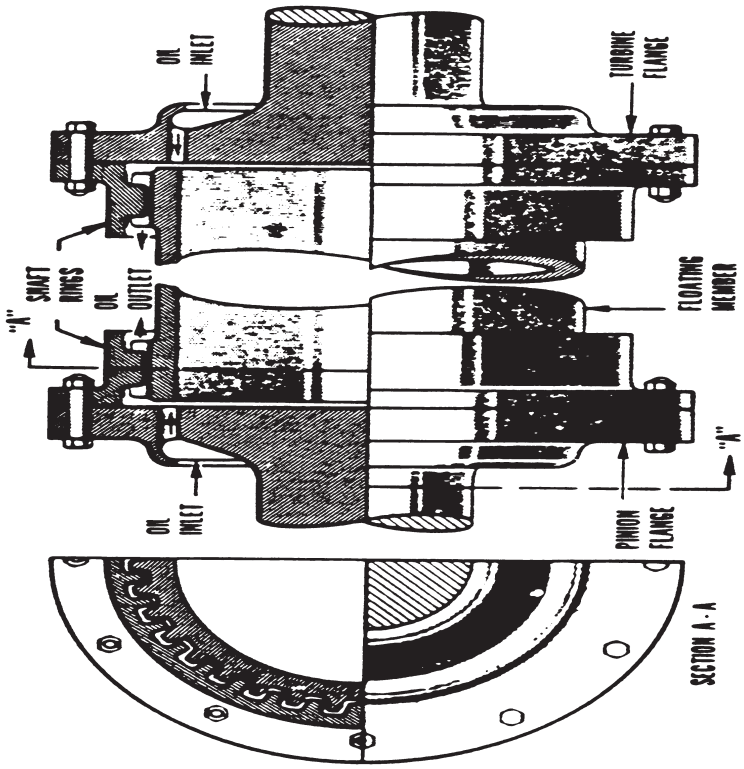
OIL INLET
SHAFT RINGS
"A"
OIL OUTLET
OIL INLET
TURBINE FLANGE
FLOATING MEMBER
"A"
PINION FLANGE
SECTION A-A

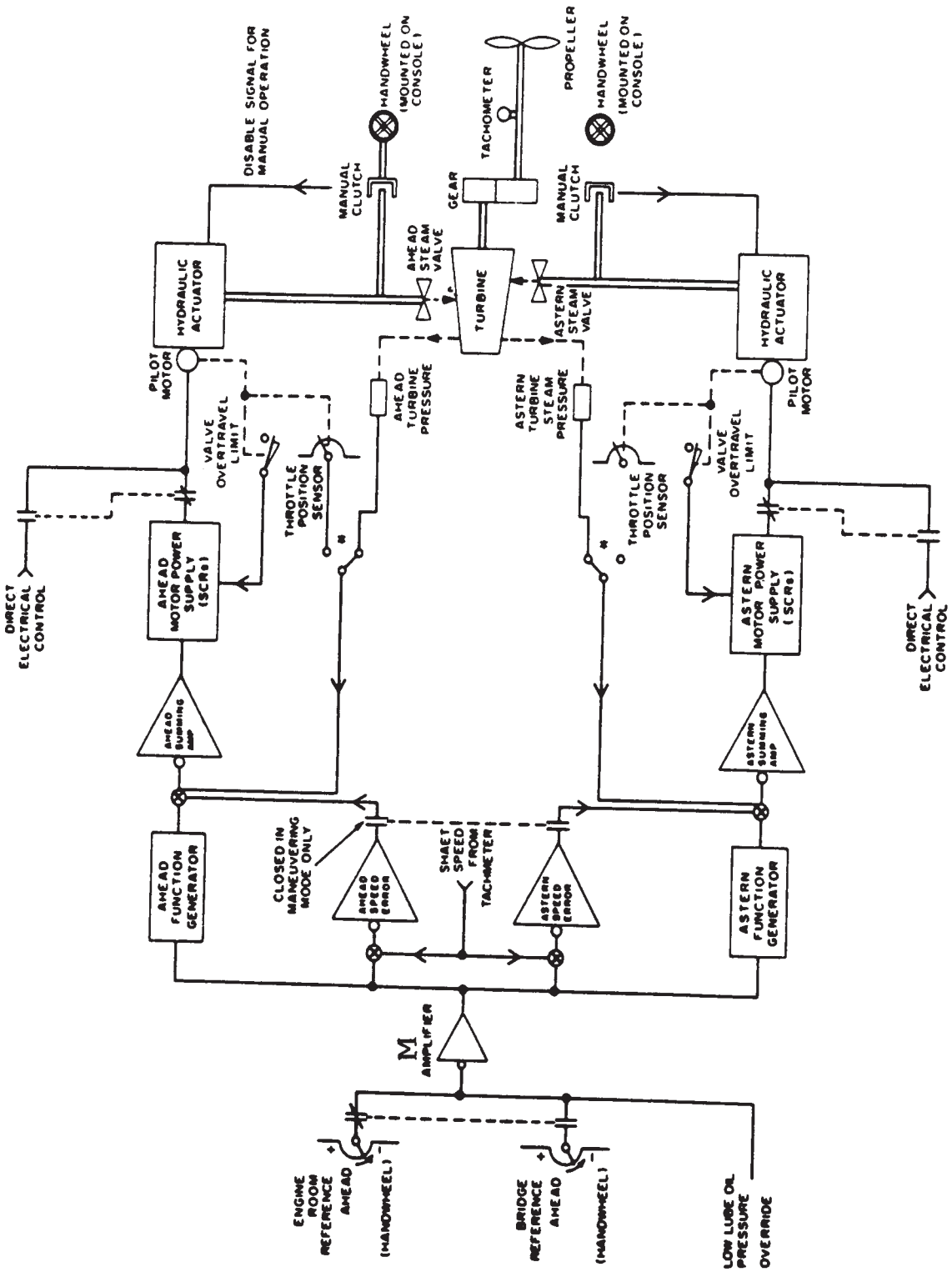
DISABLE SIGNAL FOR MANUAL OPERATION
HANDWHEEL (MOUNTED ON CONSOLE)
TACHOMETER
PROPELLER
HANDWHEEL (MOUNTED ON CONSOLE)
MANUAL CLUTCH
GEAR
MANUAL CLUTCH
HYDRAULIC ACTUATOR
AHEAD STEAM VALVE
TURBINE
ASTERN STEAM VALVE
HYDRAULIC ACTUATOR
PILOT MOTOR
AHEAD TURBINE PRESSURE
ASTERN TURBINE STEAM PRESSURE
PILOT MOTOR
VALVE OVERTRAVEL LIMIT
THROTTLE POSITION SENSOR
THROTTLE POSITION SENSOR
VALVE OVERTRAVEL LIMIT
DIRECT ELECTRICAL CONTROL
AHEAD MOTOR POWER SUPPLY (SCRs)
ASTERN MOTOR POWER SUPPLY (SCRs)
DIRECT ELECTRICAL CONTROL
AHEAD SUMMING AMP
ASTERN SUMMING AMP
AHEAD FUNCTION GENERATOR
CLOSED IN MANEUVERING MODE ONLY
AHEAD SPEED ERROR
SHAFT SPEED FROM TACHOMETER
ASTERN SPEED ERROR
ASTERN FUNCTION GENERATOR
M AMPLIFIER
ENGINE ROOM REFERENCE AHEAD
(HANDWHEEL)
BRIDGE REFERENCE AHEAD
(HANDWHEEL)
LOW LUBE OIL PRESSURE OVERRIDE

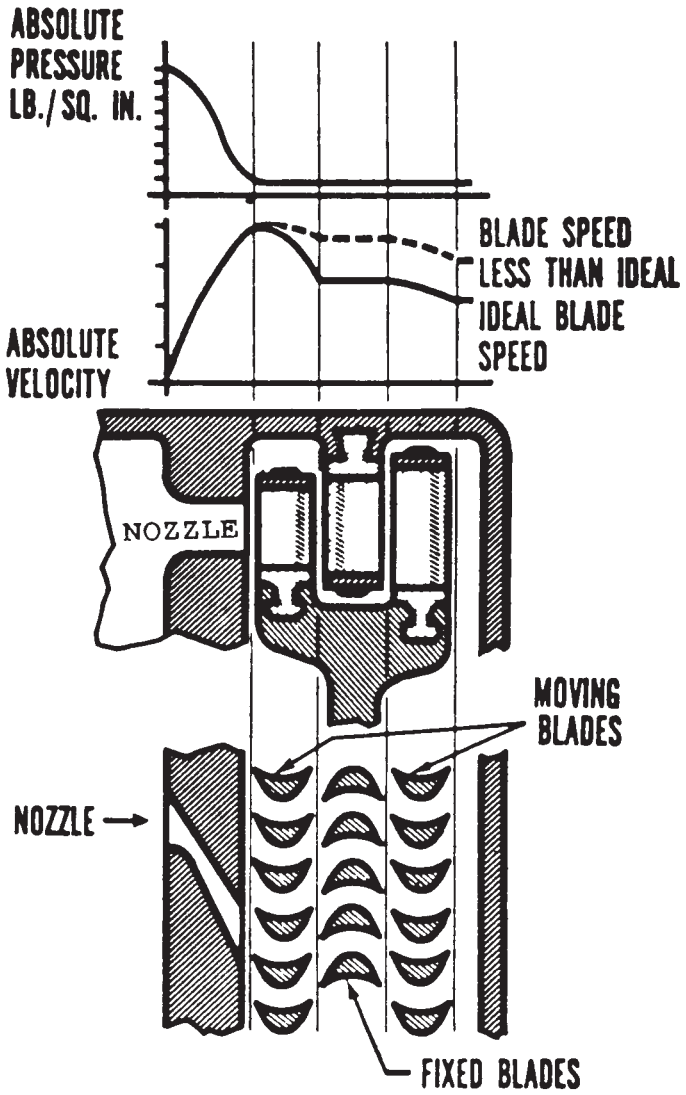
ABSOLUTE
PRESSURE
LB./SQ. IN.
BLADE SPEED
LESS THAN IDEAL
IDEAL BLADE
SPEED
ABSOLUTE
VELOCITY
NOZZLE
MOVING
BLADES
NOZZLE
FIXED BLADES

SE-0004

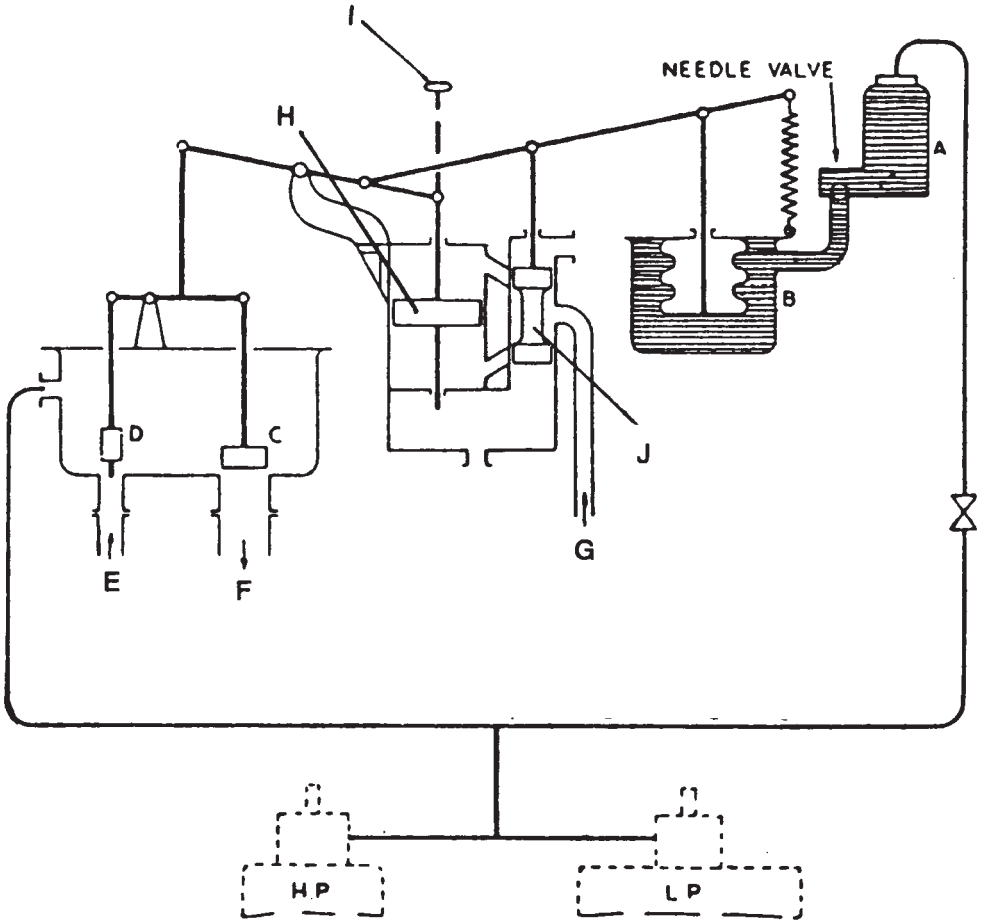

SE-0005

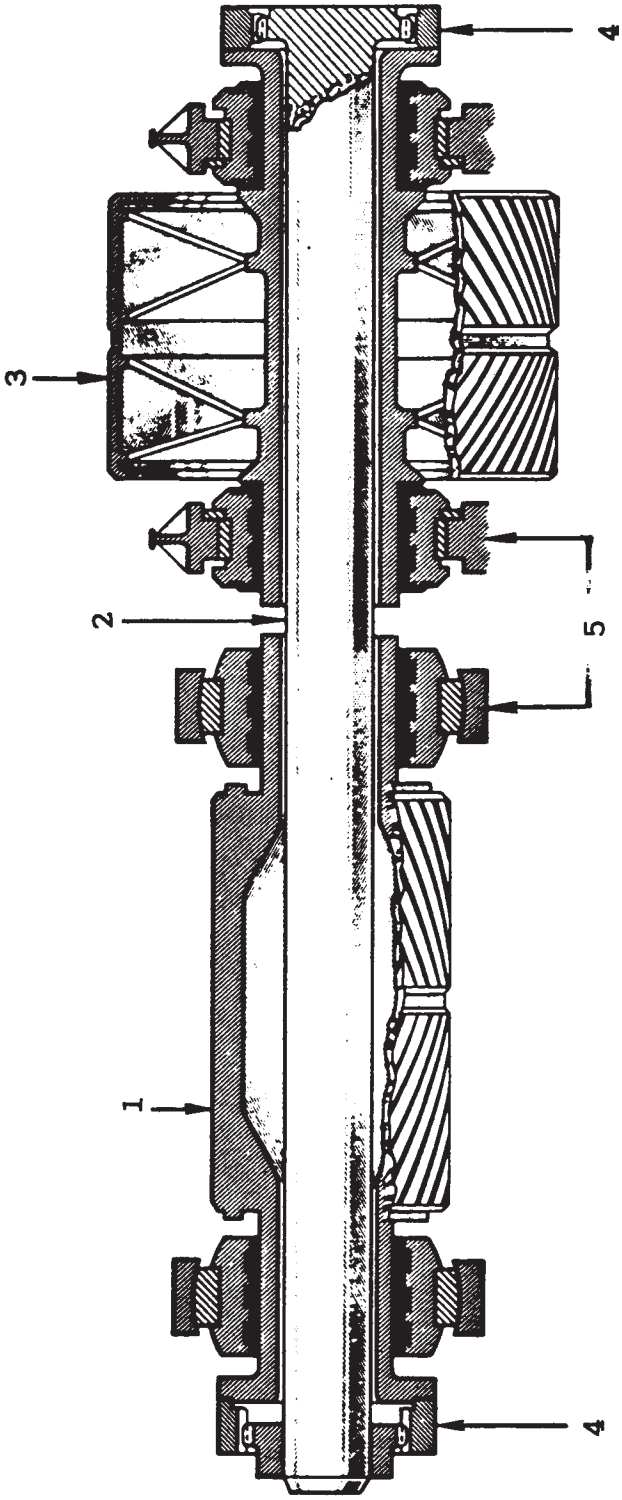

SE-0006

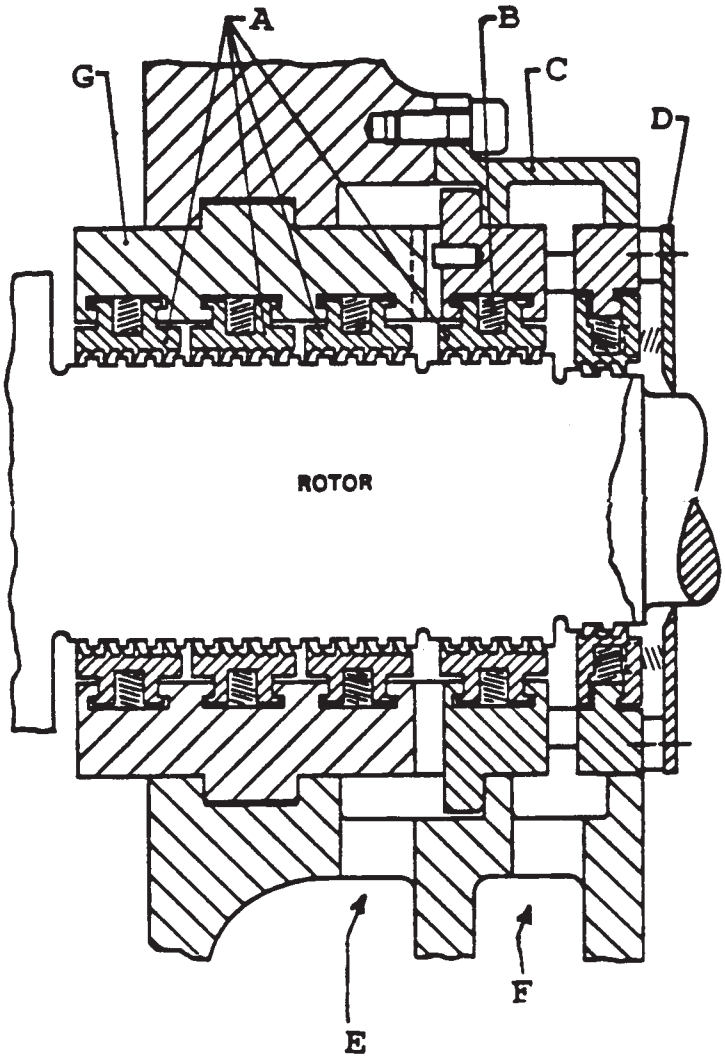

SE-0007

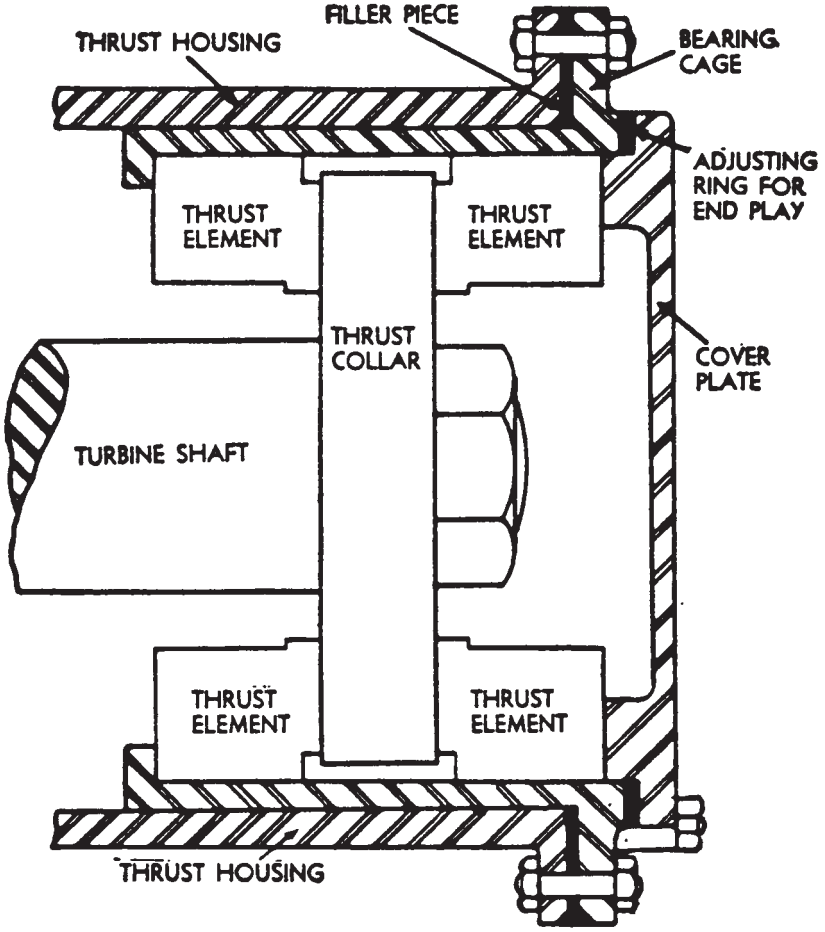
FILLER PIECE
THRUST HOUSING
BEARING CAGE
ADJUSTING RING FOR END PLAY
THRUST ELEMENT
THRUST ELEMENT
THRUST COLLAR
COVER PLATE
TURBINE SHAFT
THRUST ELEMENT
THRUST ELEMENT
THRUST HOUSING

SE-0008

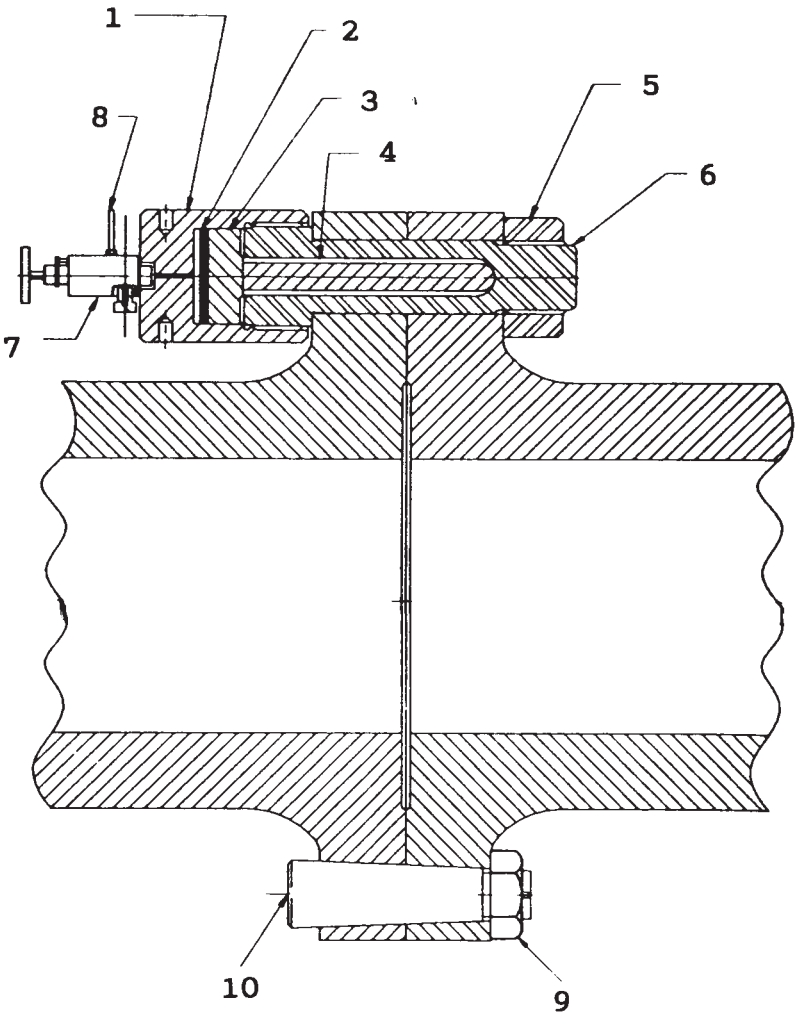

SE-0009

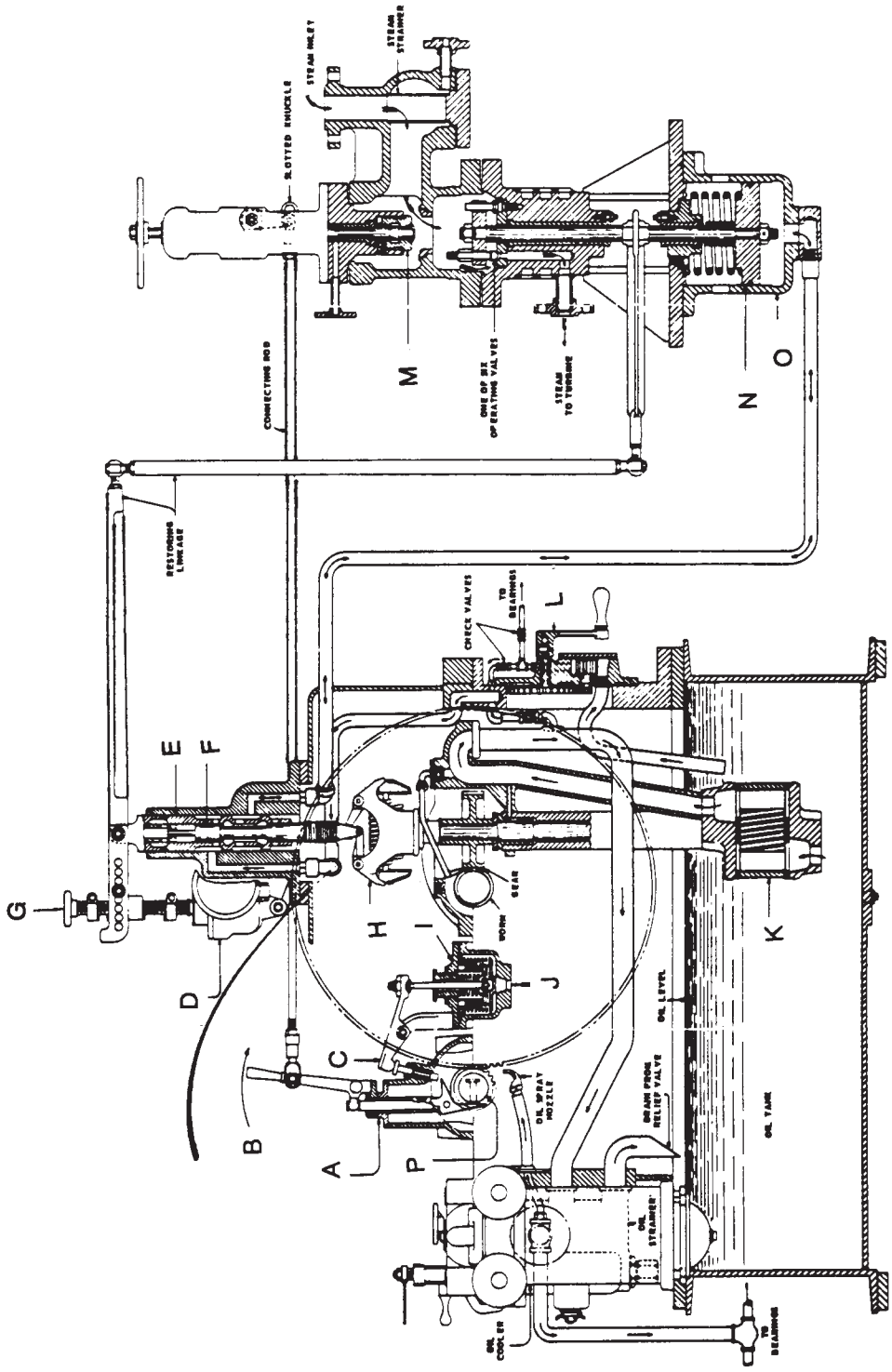
STEAM INLET
STEAM STRAINER
SLOTTED KNUCKLE
CONNECTING ROD
RESTORING LINKAGE
ONE OF SIX OPERATING VALVES
STEAM TO TURBINE
CHECK VALVES
TO BEARINGS
GEAR
WORM
OIL LEVEL
OIL SPRAY NOZZLE
DRAIN FROM RELIEF VALVE
OIL TANK
OIL STRAINER
OIL COOLER
TO BEARINGS
A
B
C
D
E
F
G
H
I
J
K
L
M
N
O
P

SE-0010

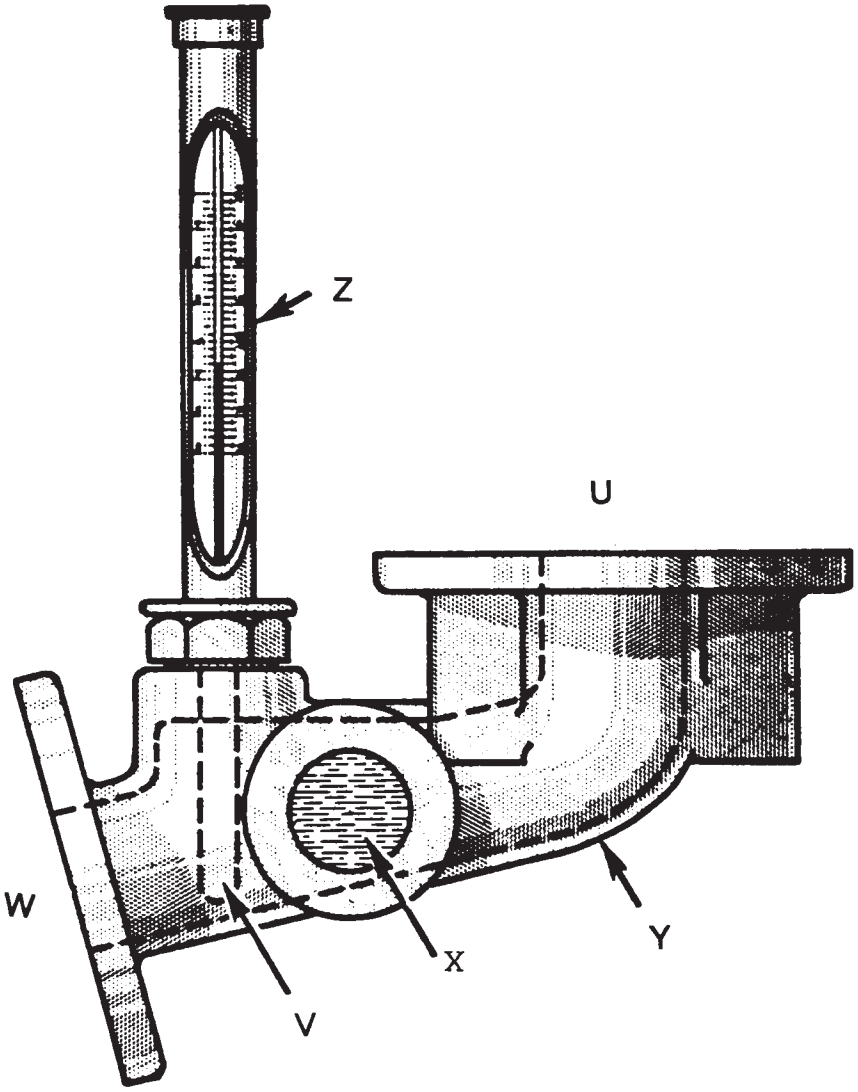

SE-0011

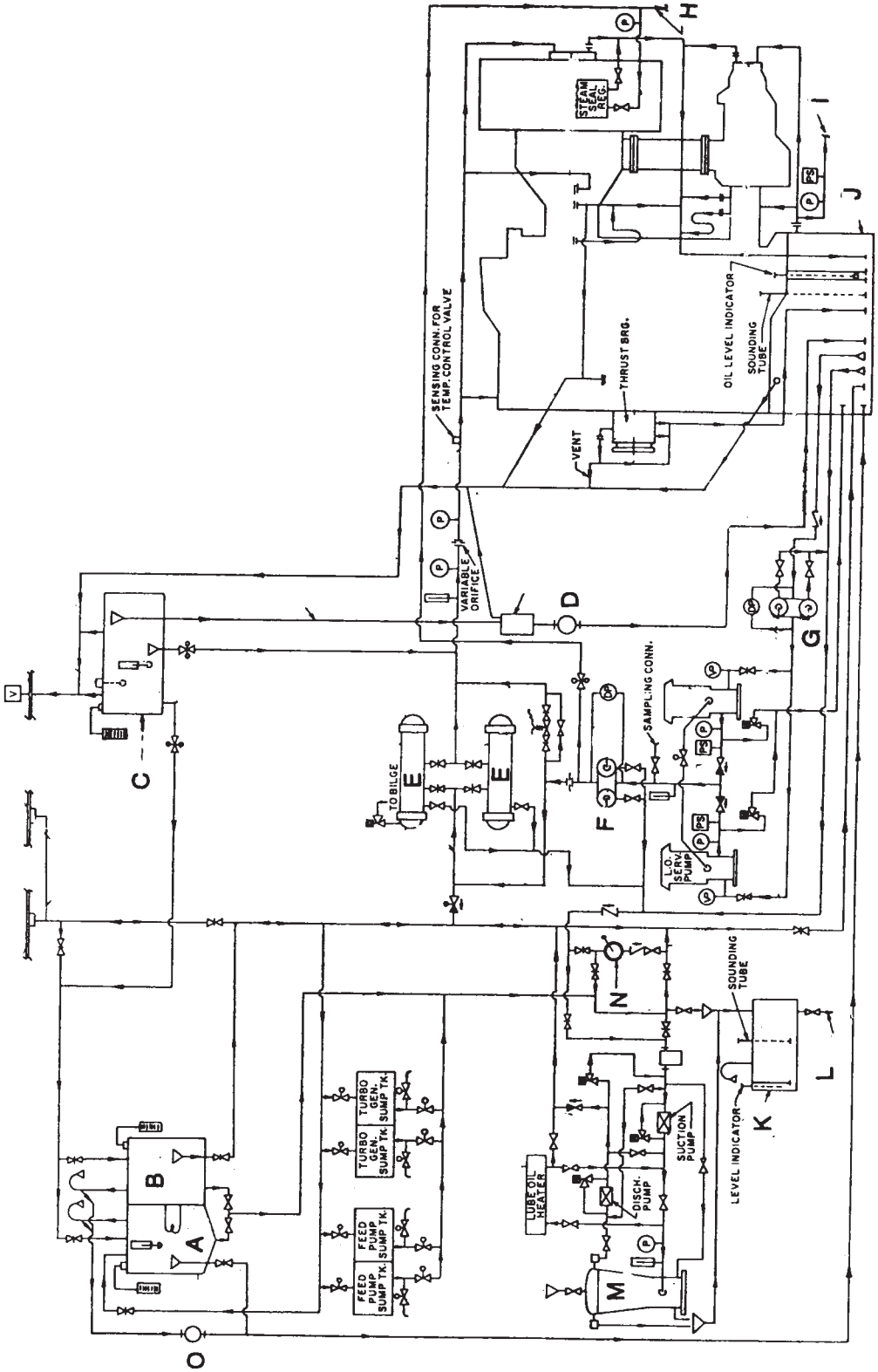
STEAM SEAL REG.
SENSING CONN. FOR TEMP. CONTROL VALVE
THRUST BRG.
OIL LEVEL INDICATOR
SOUNDING TUBE
VENT
VARIABLE ORIFICE
SAMPLING CONN.
TO BILGE
L.O. SERV. PUMP
TURBO GEN. SUMP TK.
FEED PUMP SUMP TK.
LUBE OIL HEATER
DISCH. PUMP
SUCTION PUMP
LEVEL INDICATOR
SOUNDING TUBE
A
B
C
D
E
F
G
H
I
J
K
L
M
N
O

SE-0012

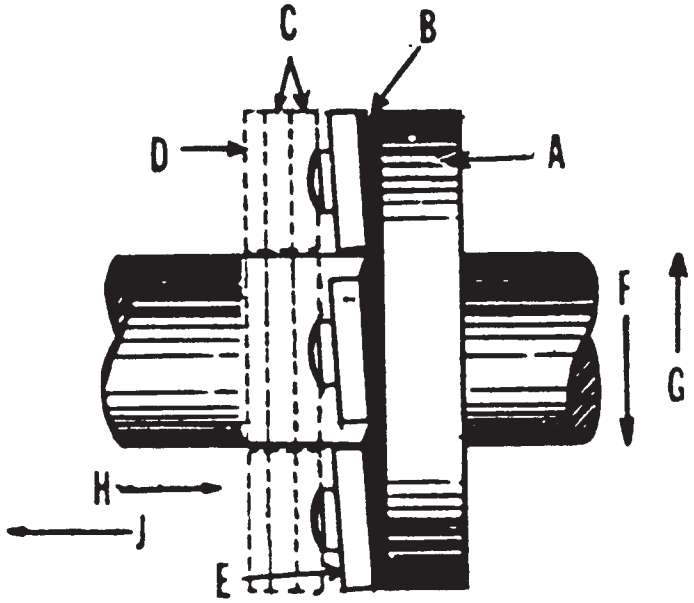

SE-0013

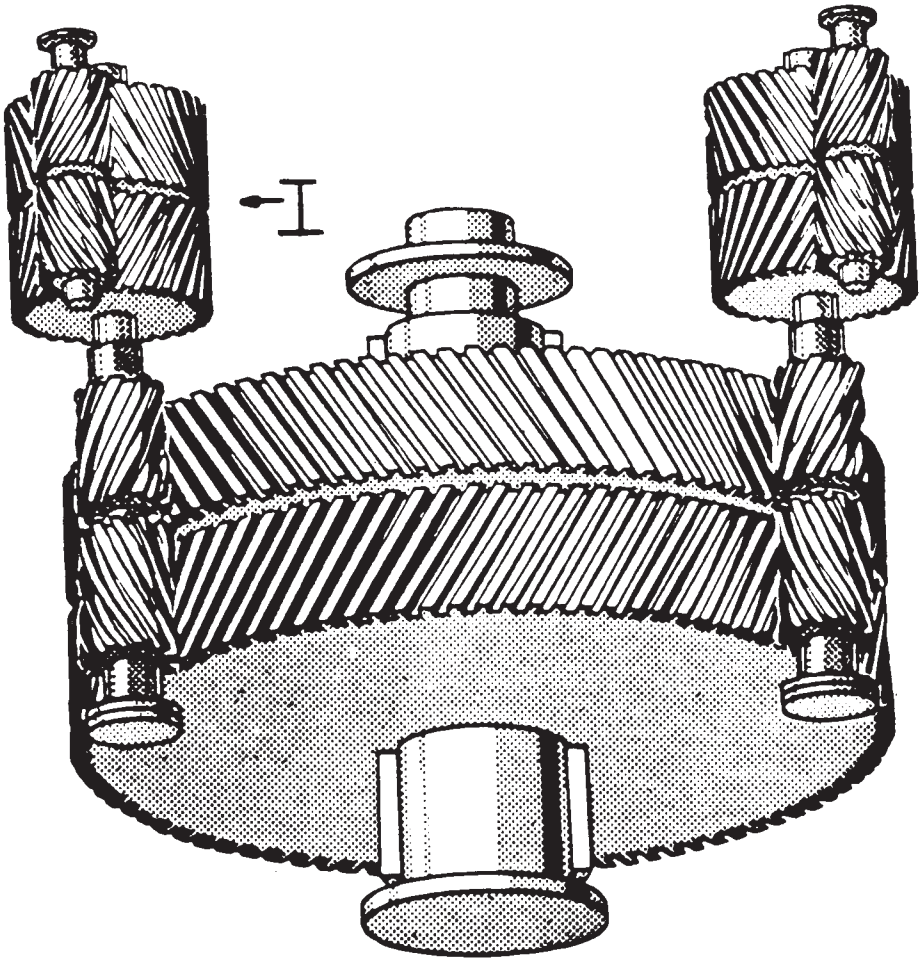

SE-0014

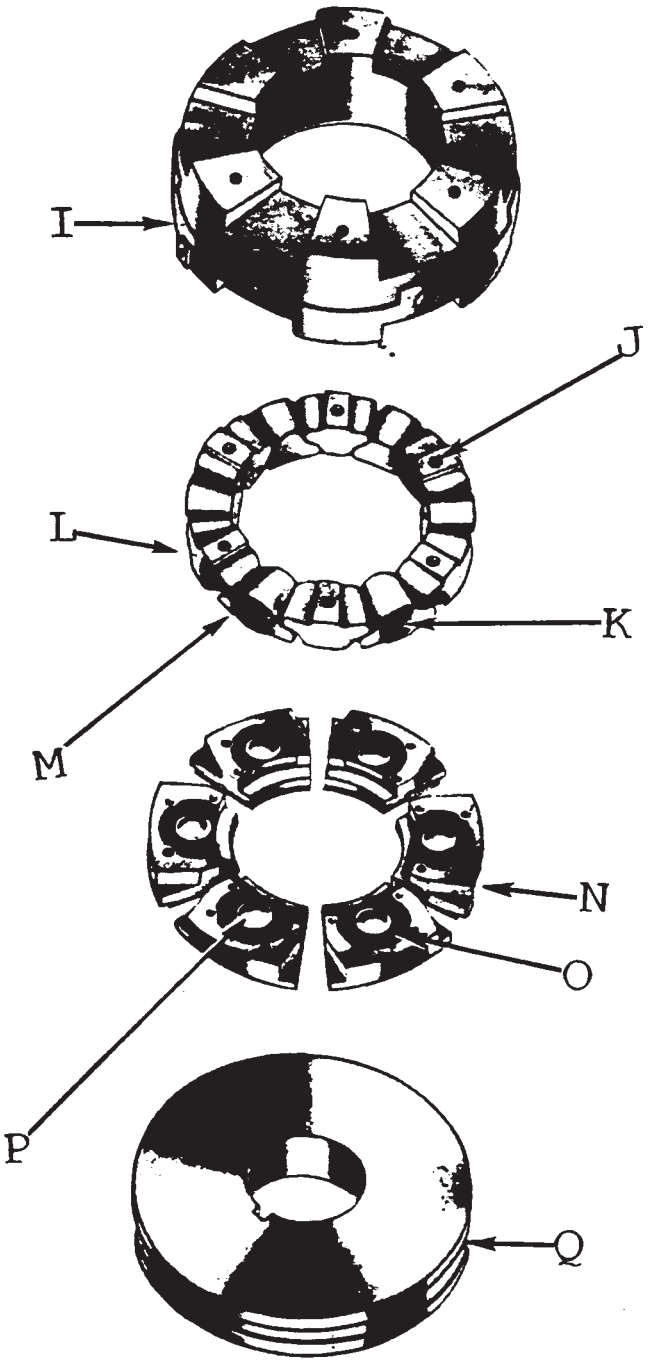

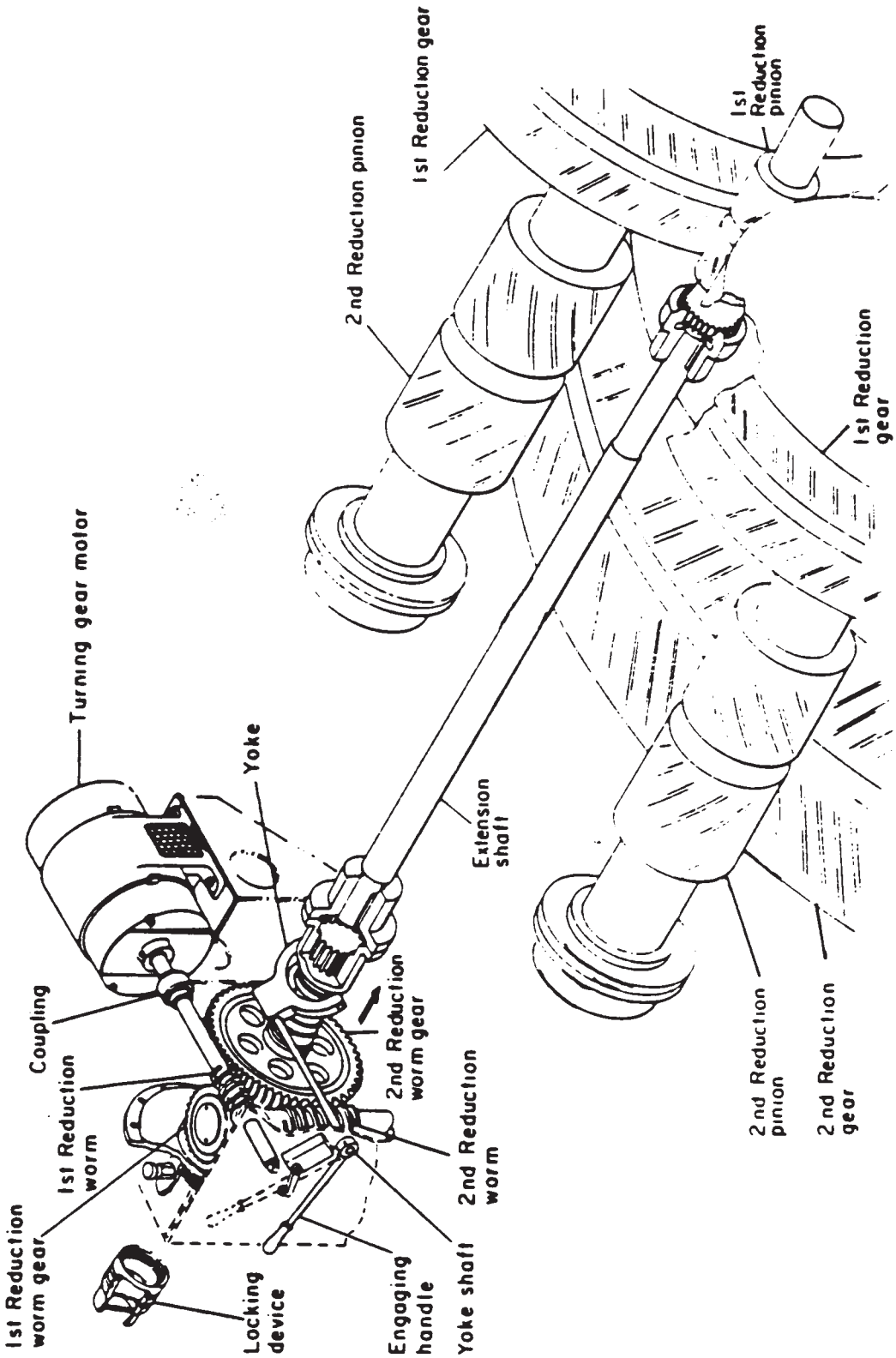
Turning gear motor
Yoke
Coupling
1st Reduction worm
1st Reduction worm gear
Locking device
Engaging handle
Yoke shaft
2nd Reduction worm
2nd Reduction worm gear
Extension shaft
2nd Reduction pinion
1st Reduction gear
1st Reduction pinion
1st Reduction gear
2nd Reduction pinion
2nd Reduction gear

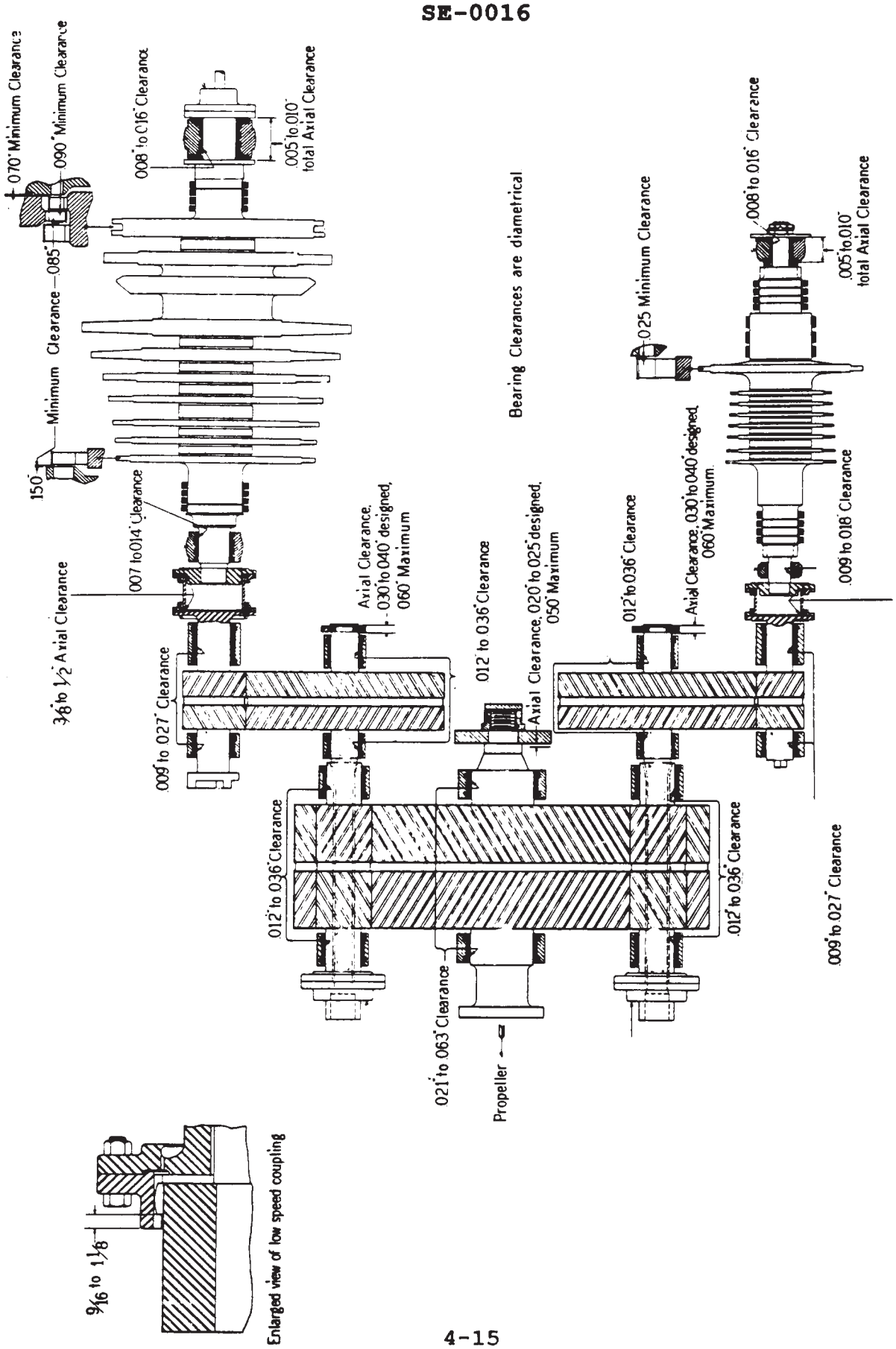
.070" Minimum Clearance
.090" Minimum Clearance
.085"
Minimum Clearance
.150"
.008" to .016" Clearance
.005" to .010" total Axial Clearance
.007 to .014" Clearance
3/8" to 1/2" Axial Clearance
.009" to .027" Clearance
Axial Clearance, .030" to .040" designed, .060" Maximum
.012" to .036" Clearance
Bearing Clearances are diametrical
Axial Clearance, .020" to .025" designed, .050" Maximum
.012" to .036" Clearance
.012" to .036" Clearance
.021" to .063" Clearance
Propeller
.025 Minimum Clearance
Axial Clearance, .030" to .040" designed, .060" Maximum.
.008" to .016" Clearance
.005" to .010" total Axial Clearance
.009 to .016" Clearance
.009" to .027" Clearance
9/16" to 1 1/8"
Enlarged view of low speed coupling

SE-0017

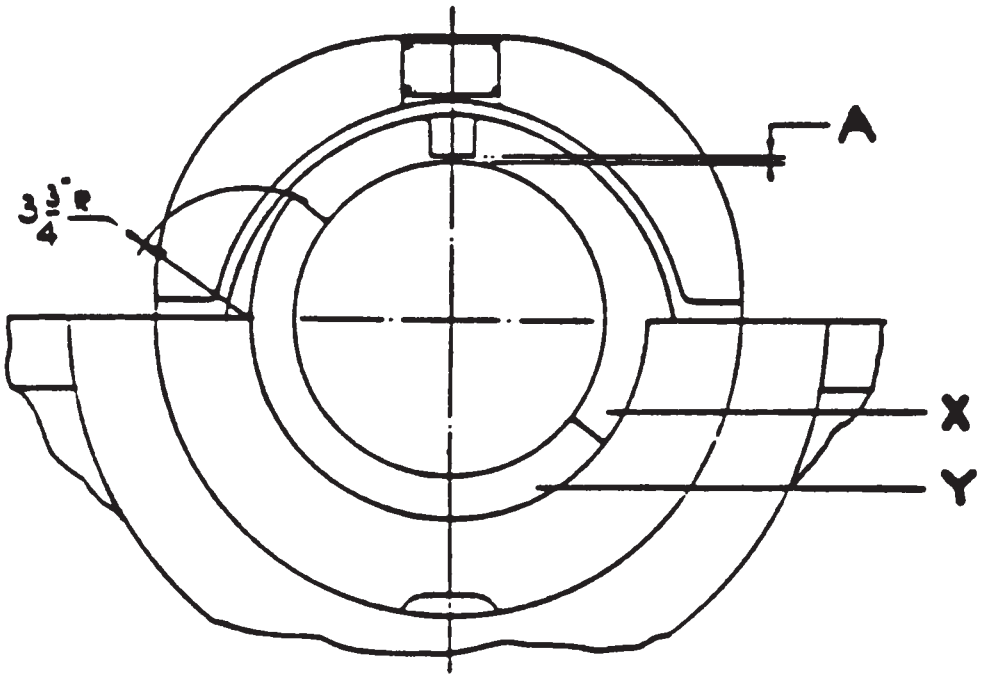

GEAR BEARINGS

SE-0018

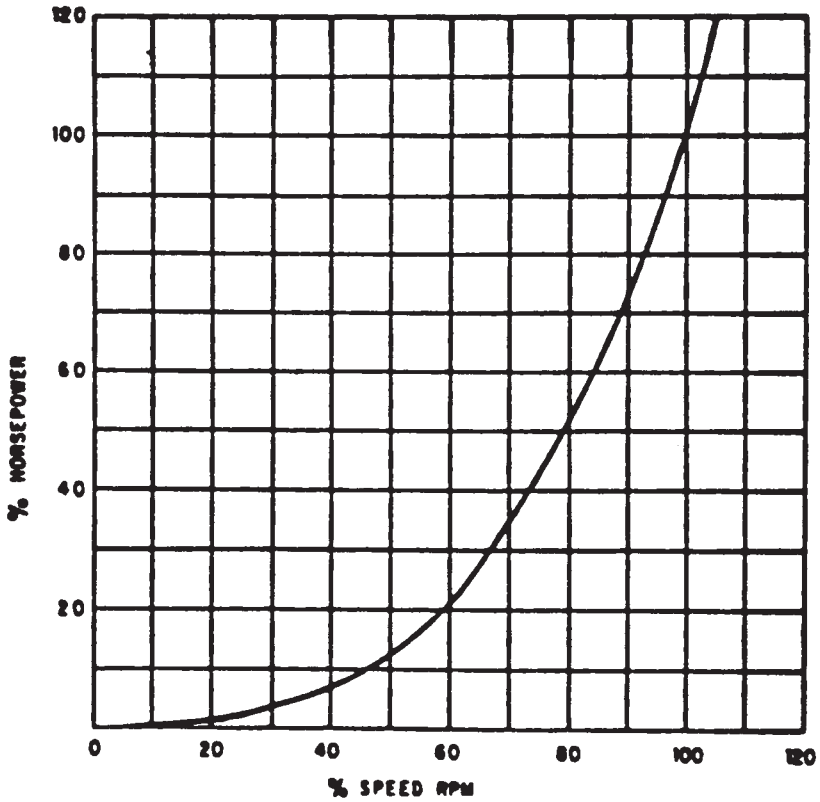

SE-0019

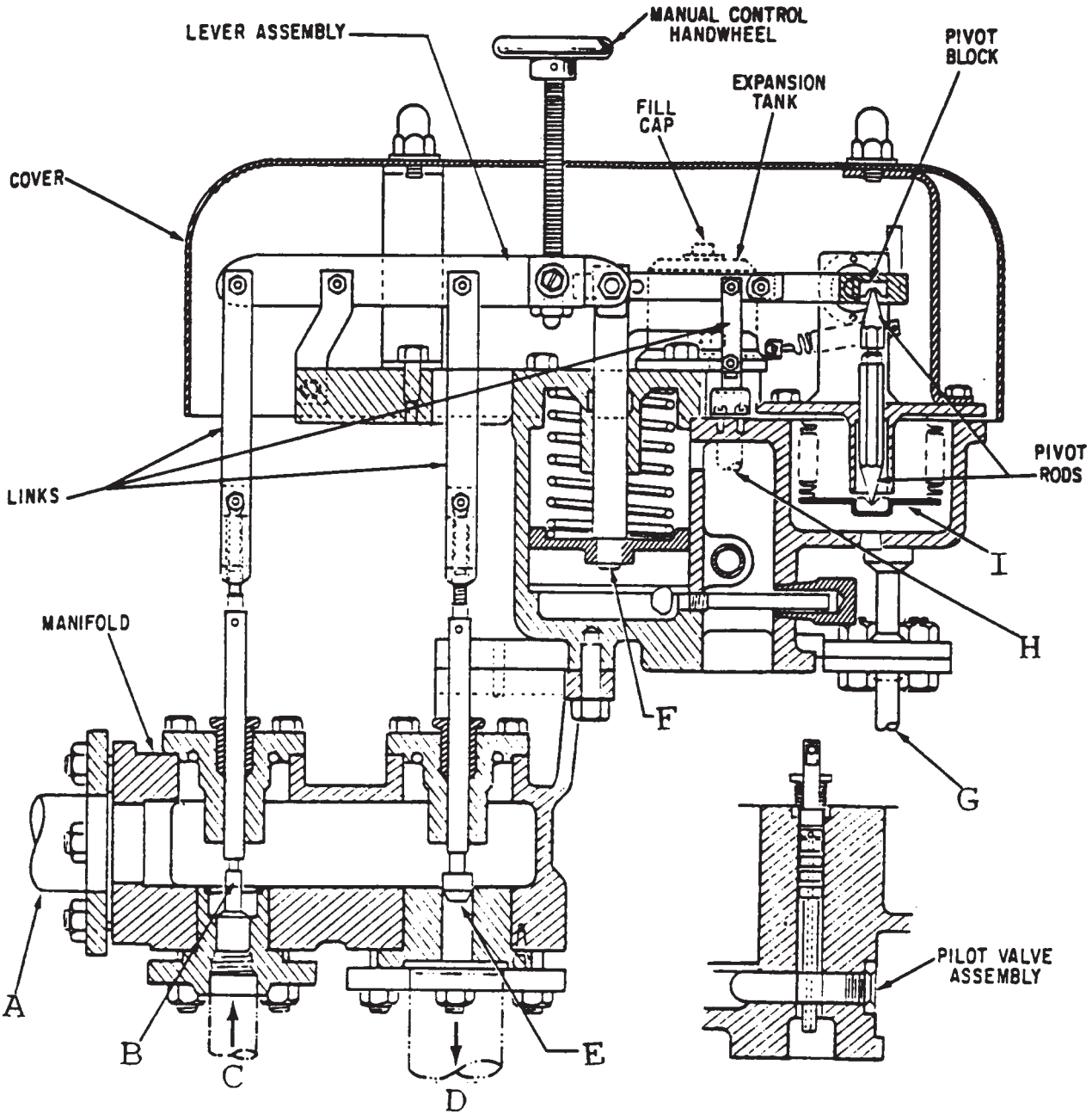
LEVER ASSEMBLY
MANUAL CONTROL HANDWHEEL
PIVOT BLOCK
EXPANSION TANK
FILL CAP
COVER
PIVOT RODS
LINKS
I
H
MANIFOLD
F
G
PILOT VALVE ASSEMBLY
A
B
C
D
E

SE-0020

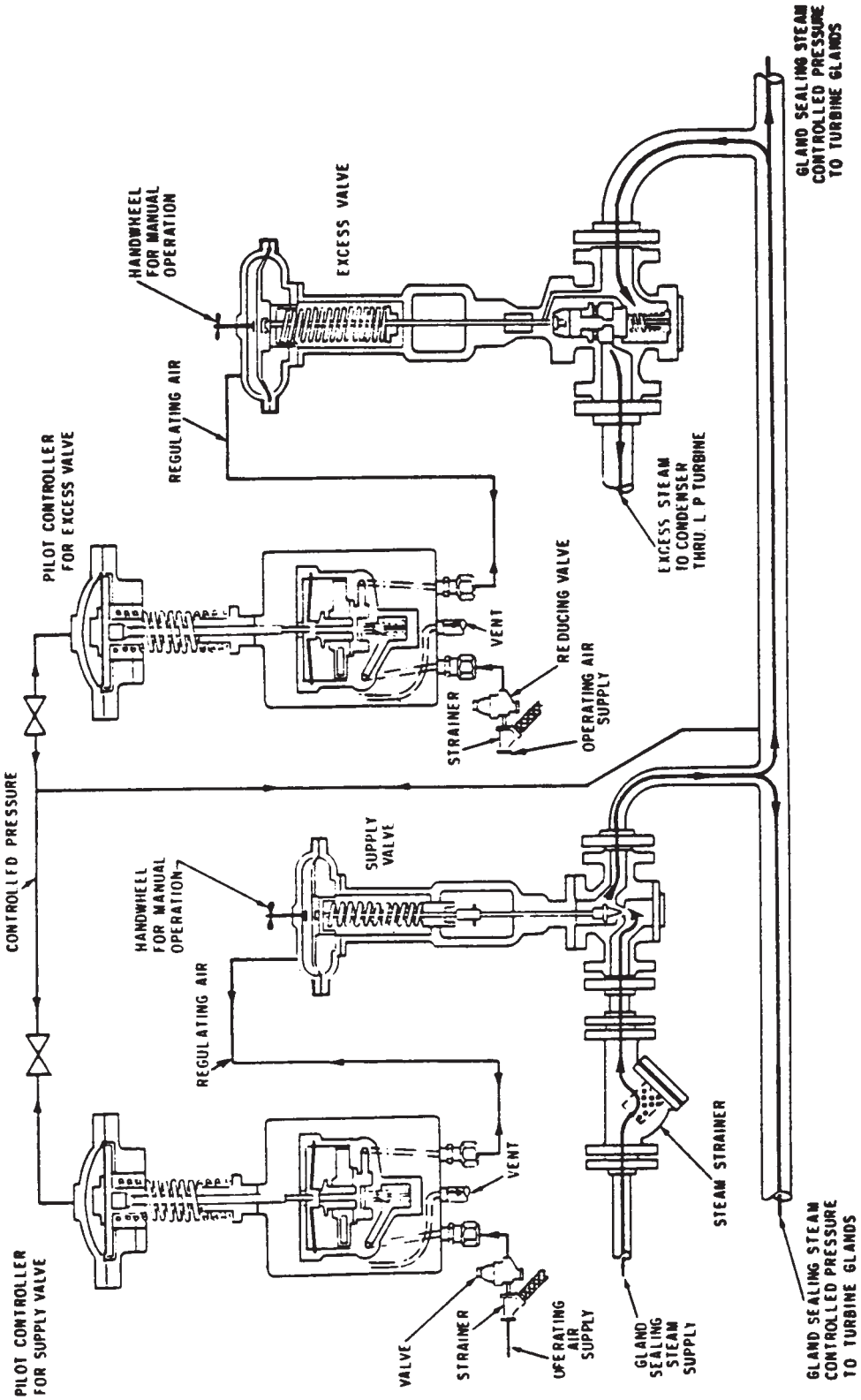
GLAND SEALING STEAM CONTROLLED PRESSURE TO TURBINE GLANDS
HANDWHEEL FOR MANUAL OPERATION
EXCESS VALVE
REGULATING AIR
PILOT CONTROLLER FOR EXCESS VALVE
EXCESS STEAM TO CONDENSER THRU. L P TURBINE
REDUCING VALVE
VENT
OPERATING AIR SUPPLY
STRAINER
CONTROLLED PRESSURE
SUPPLY VALVE
HANDWHEEL FOR MANUAL OPERATION
REGULATING AIR
VENT
STEAM STRAINER
PILOT CONTROLLER FOR SUPPLY VALVE
VALVE
STRAINER
OPERATING AIR SUPPLY
GLAND SEALING STEAM SUPPLY
GLAND SEALING STEAM CONTROLLED PRESSURE TO TURBINE GLANDS