RA-0001

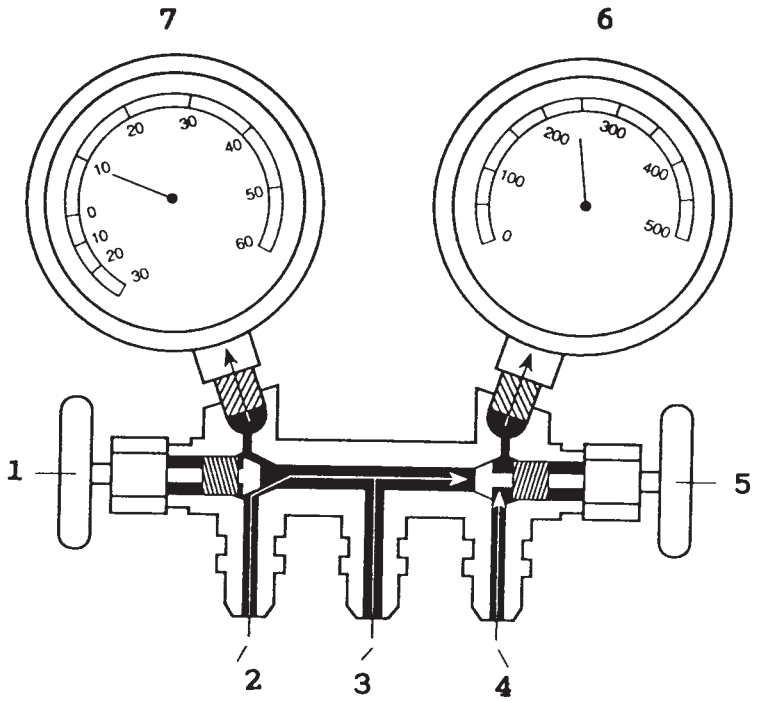

RA-0002

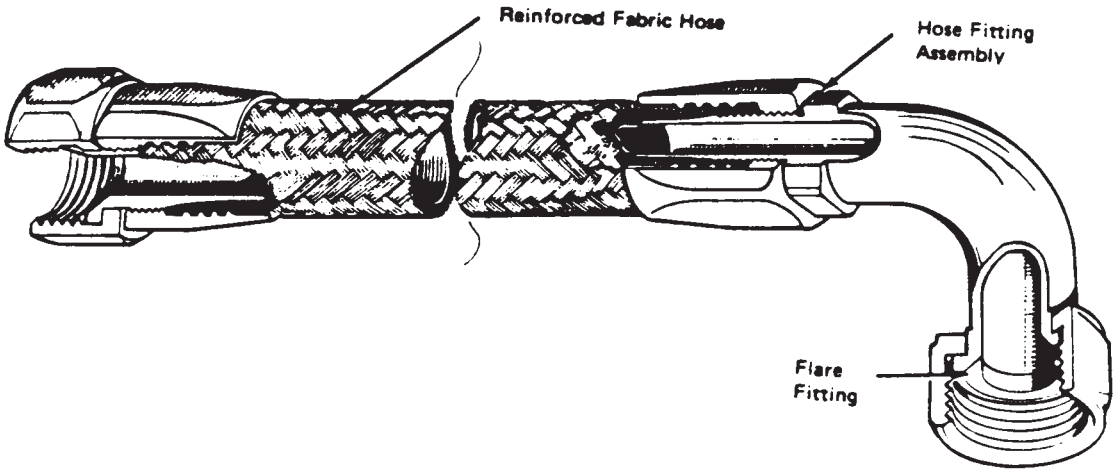

RA-0003

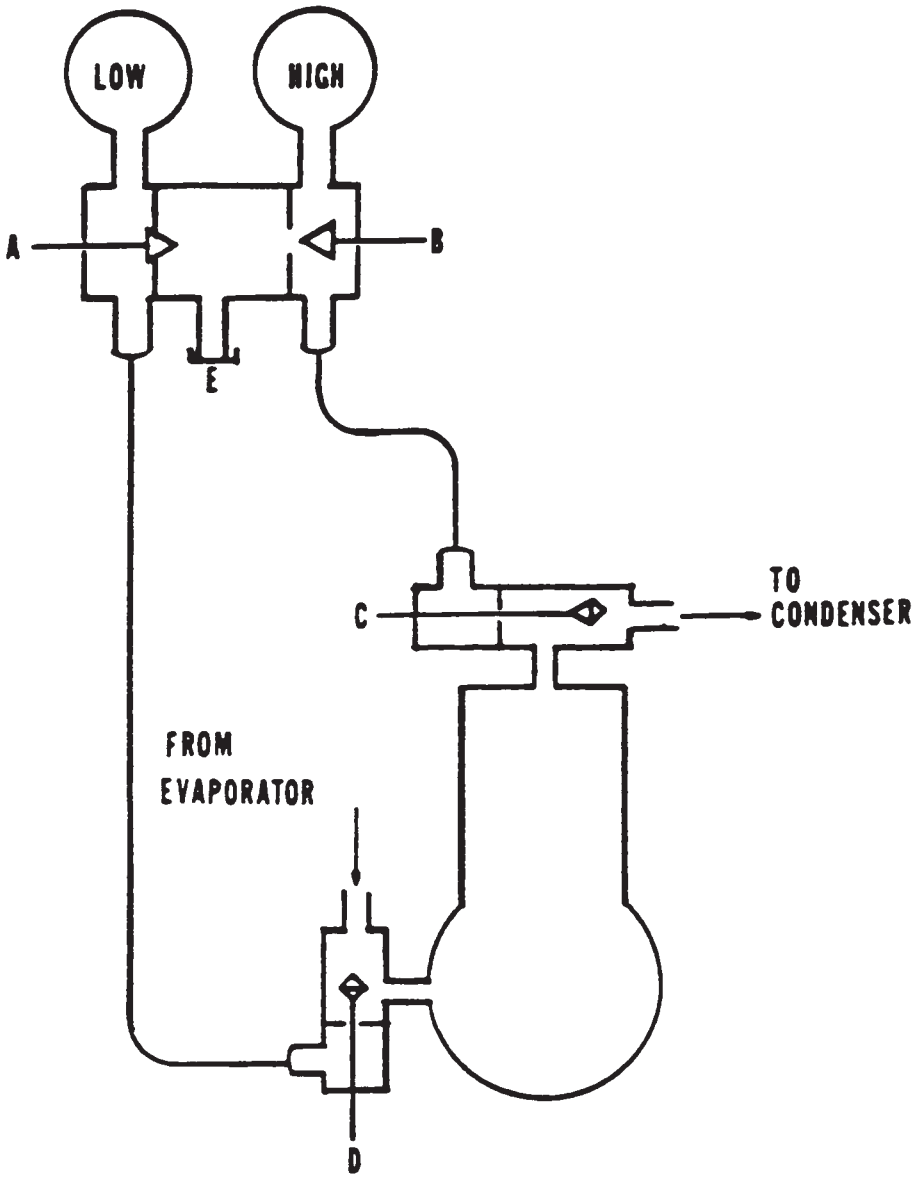

RA-0004

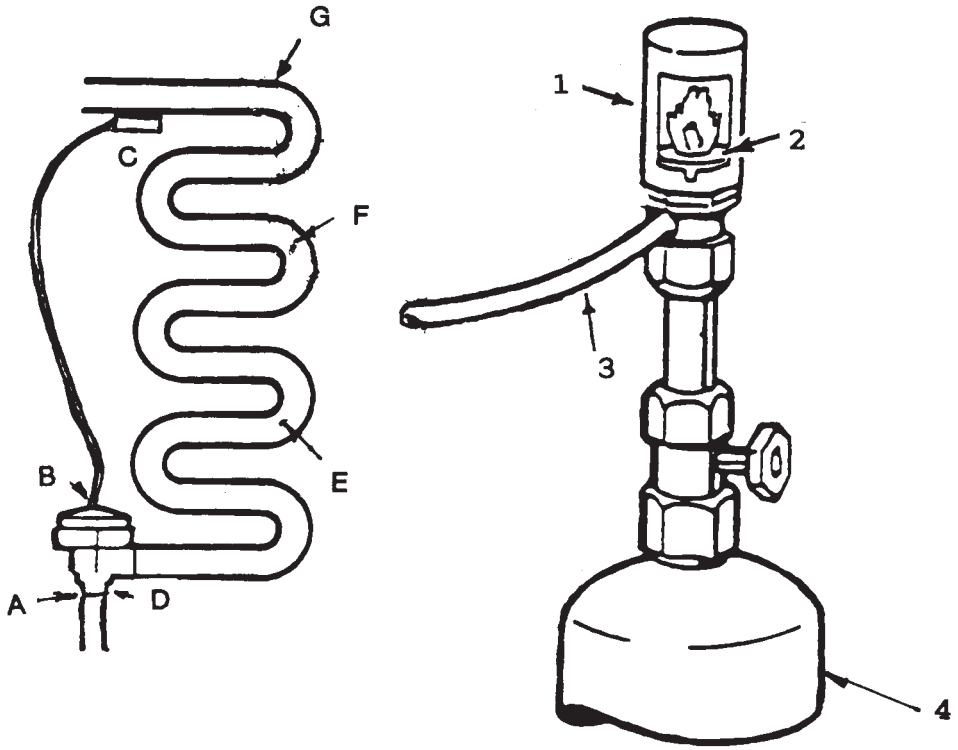

RA-0005

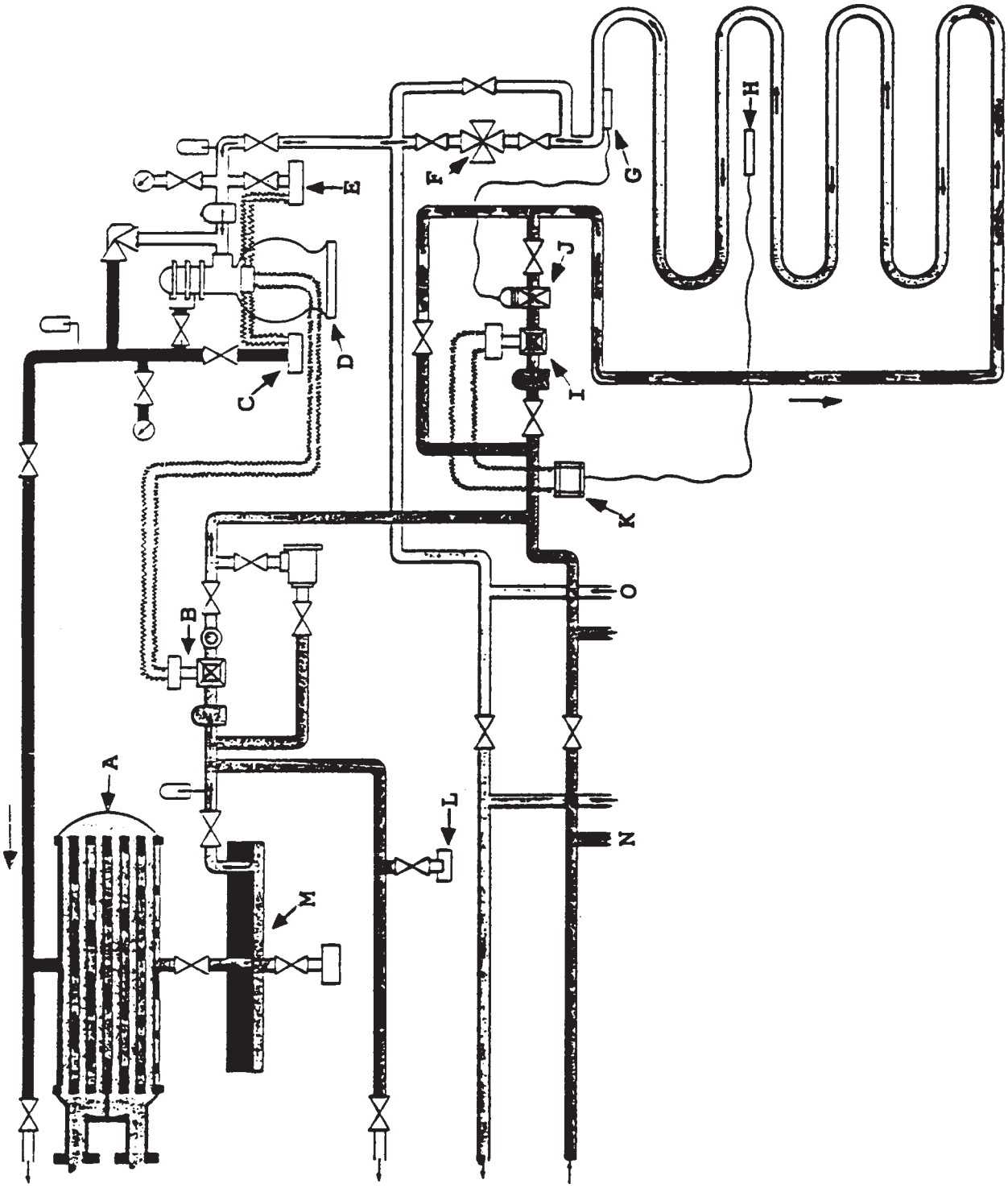

RA-0006

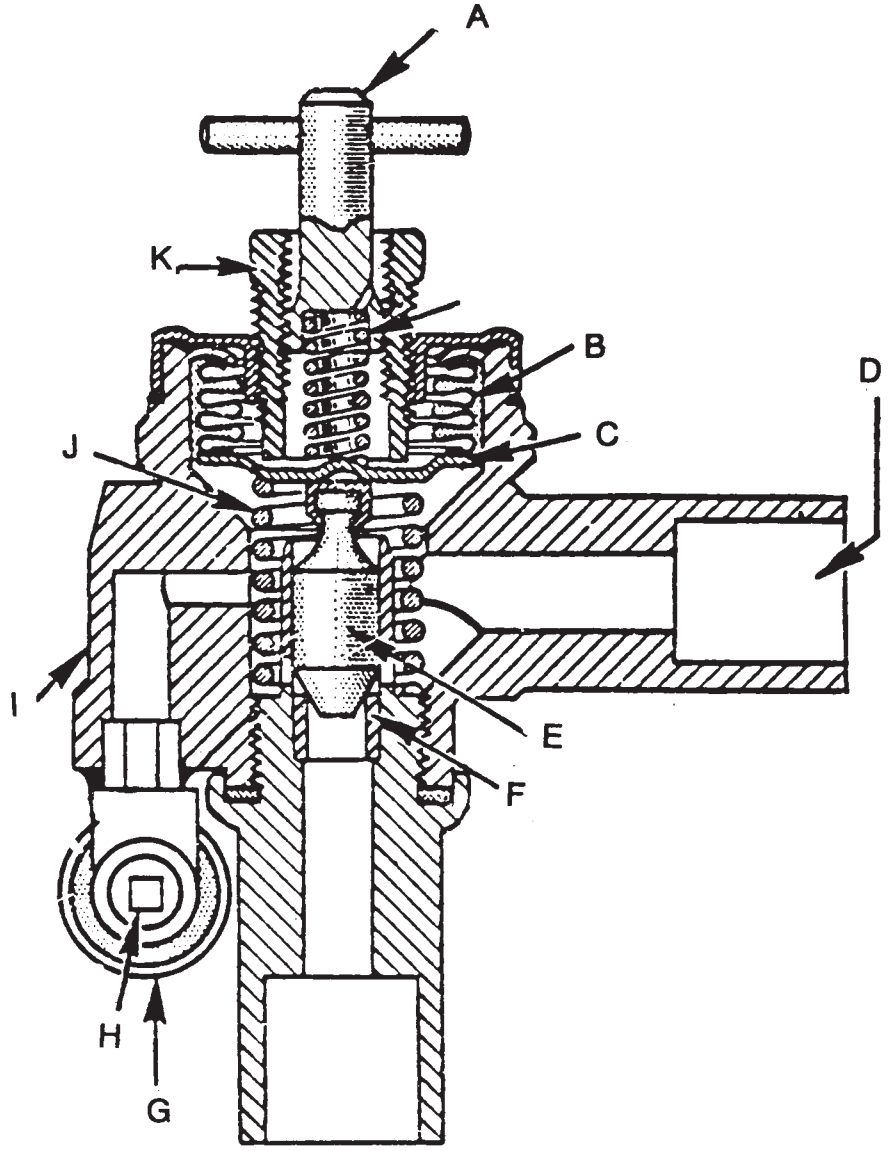

RA-0007

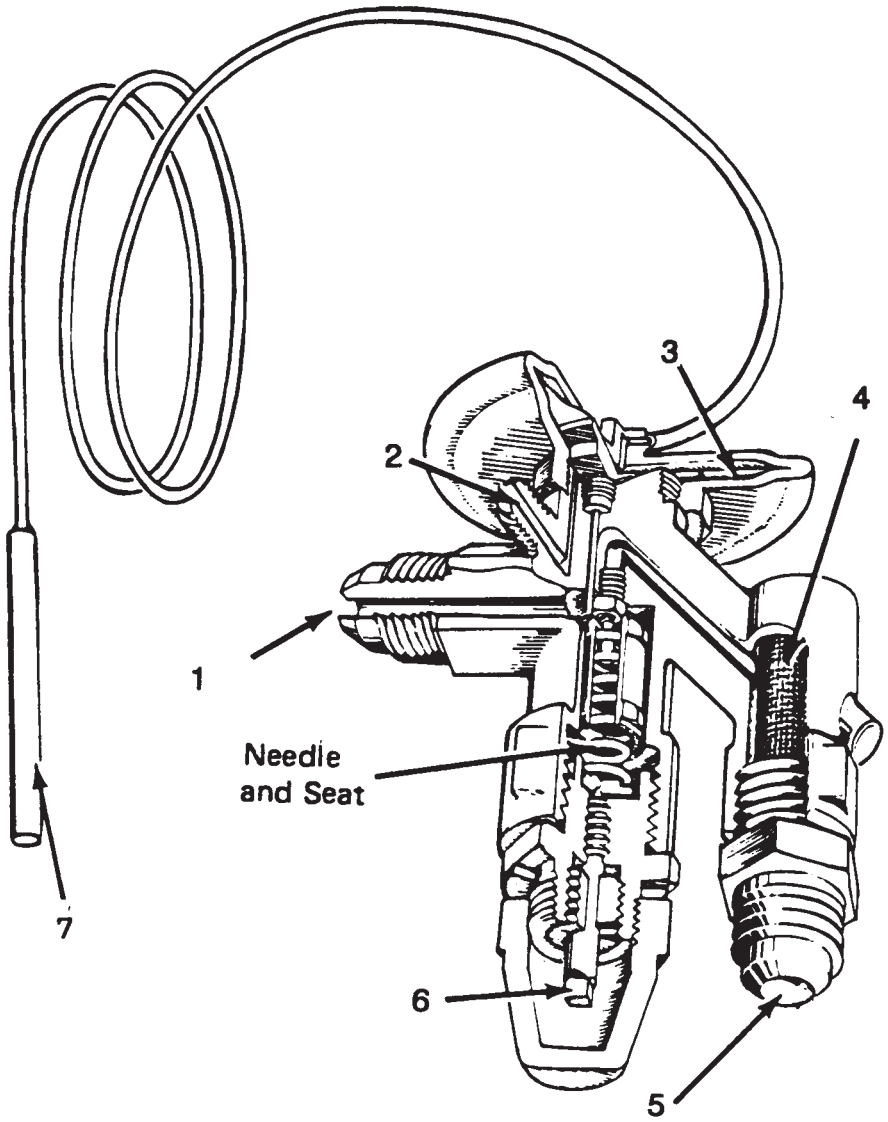

RA-0008

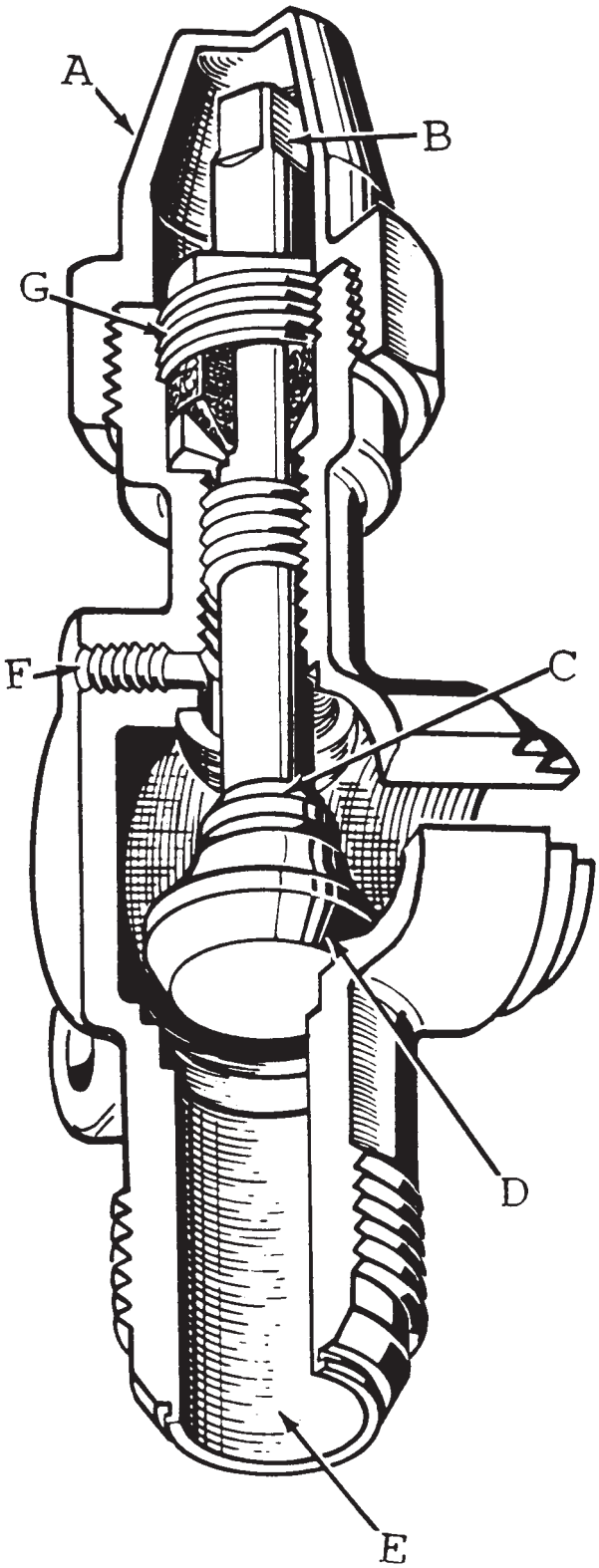

RA-0009

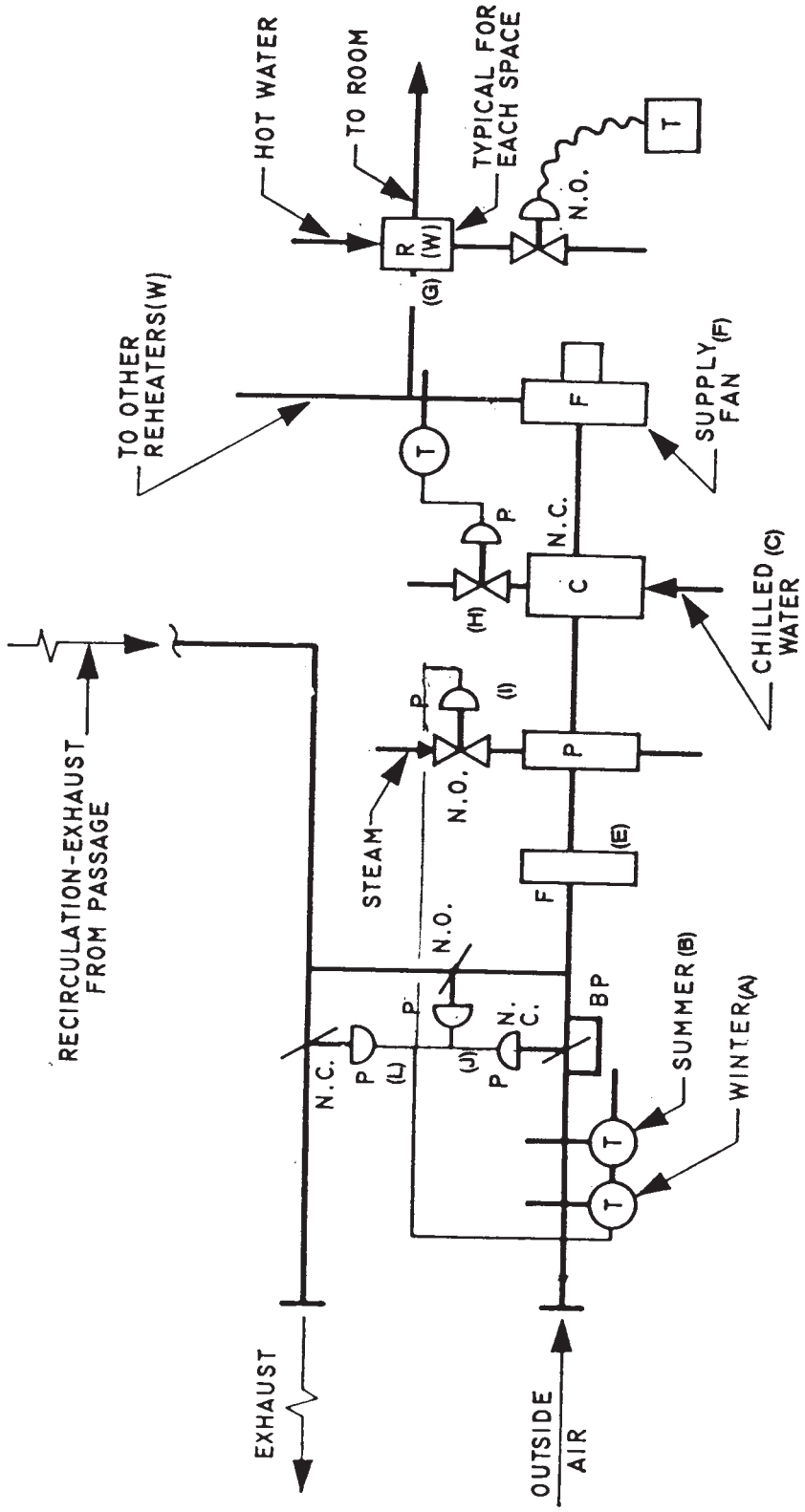
HOT WATER
TO ROOM
TYPICAL FOR EACH SPACE
R
(W)
(G)
N.O.
T
TO OTHER REHEATERS(W)
T
F
SUPPLY FAN (F)
P
N.C.
C
(H)
CHILLED WATER (C)
RECIRCULATION-EXHAUST FROM PASSAGE
P
(I)
P
N.O.
STEAM
F
(E)
N.O.
P
N.C.
BP
N.C.
P
(L)
(J)
P
SUMMER (B)
WINTER (A)
T
T
EXHAUST
OUTSIDE AIR

RA-0010

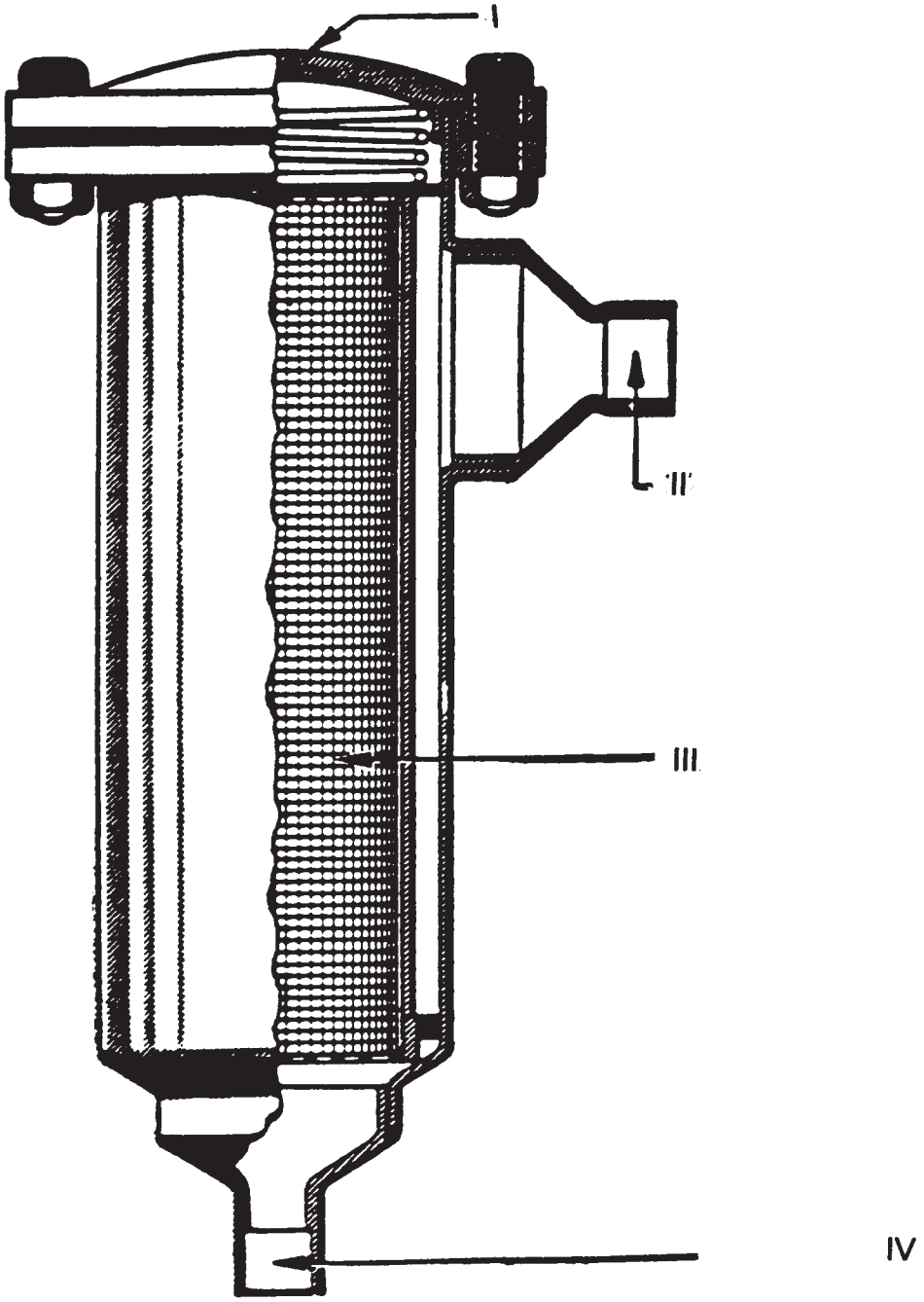

	PRESSURE		VOLUME VAPOR	DENSITY LIQUID	HEAT CONTENT BTU/LB.		LATENT HEAT BTU/LB.
Temp °F	Psia	Psig	Cu. Ft./Lb.	Lb./Cu. Ft.	Liquid	Vapor	
−100	1.24	27.4*	182.4	45.52	−63.3	572.5	635.8
− 75	3.29	23.2*	72.81	44.52	−37.0	583.3	620.3
− 50	7.67	14.3*	33.08	43.49	−10.6	593.7	604.3
− 35	12.05	5.4*	21.68	42.86	5.3	599.5	594.2
− 25	15.98	1.3	16.66	42.44	16.0	603.2	587.2
− 20	18.30	3.6	14.68	42.22	21.4	605.0	583.6
− 15	20.88	6.2	12.97	42.00	26.7	606.7	580.0
− 10	23.74	9.0	11.50	41.78	32.1	608.5	576.4
− 5	26.92	12.2	10.23	41.56	37.5	610.1	572.6
0	30.42	15.7	9.12	41.34	42.9	611.8	568.9
5	34.27	19.6	8.15	41.11	48.3	613.3	565.0
10	38.51	23.8	7.30	40.89	53.8	614.9	561.1
15	43.14	28.4	6.56	40.66	59.2	616.3	557.1
20	48.21	33.5	5.91	40.43	64.7	617.8	553.1
25	53.73	39.0	5.33	40.20	70.2	619.1	548.9
35	66.26	51.6	4.37	39.72	81.2	621.7	540.5
50	89.19	74.5	3.29	39.00	97.9	625.2	527.3
75	140.5	125.8	2.13	37.74	126.2	629.9	503.7
86	169.2	154.5	1.77	37.16	138.9	631.5	492.6
100	211.9	197.2	1.42	36.40	155.2	633.0	477.8
125	307.8	293.1	0.97	34.96	185.1	634.0	448.9

* Inches of mercury below one atmosphere.

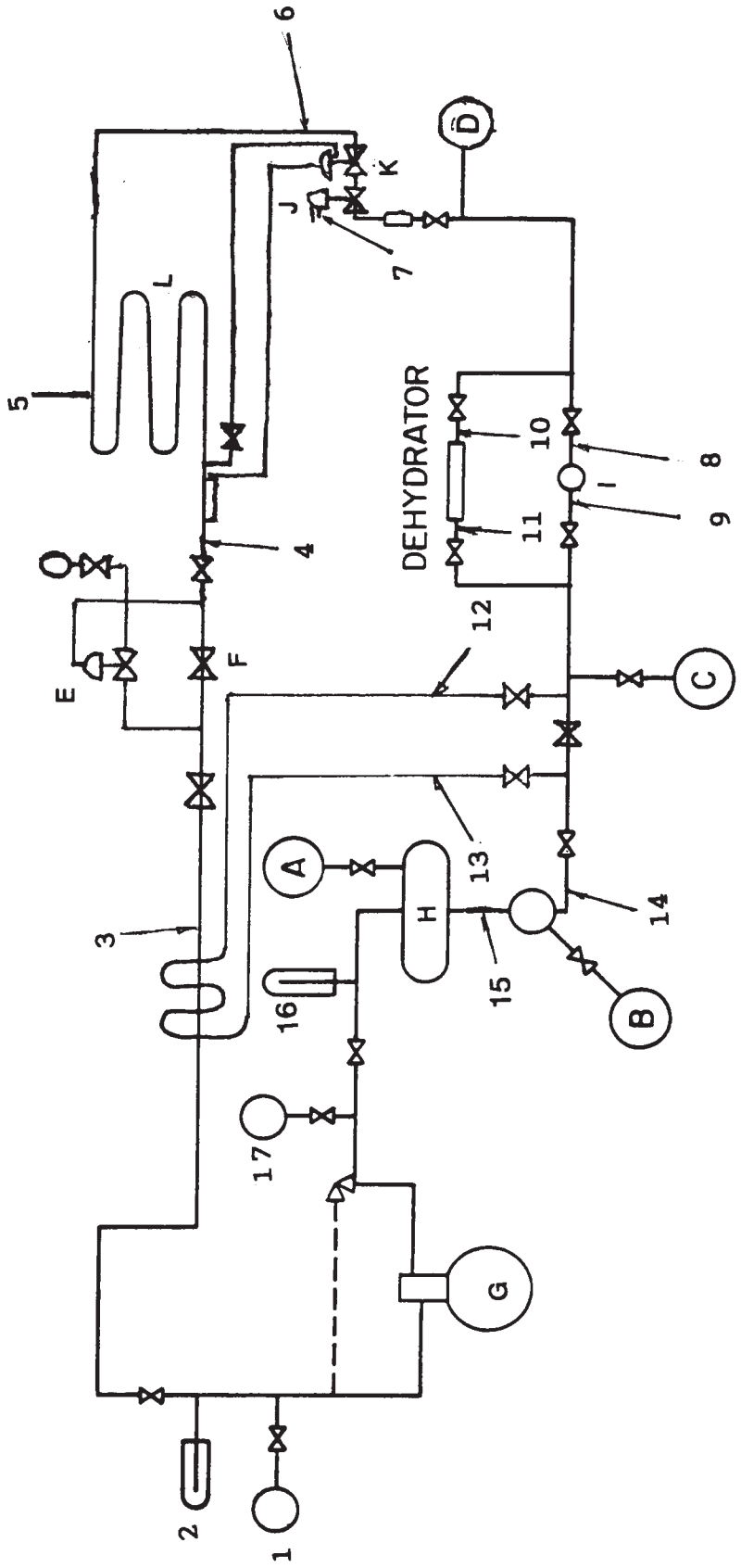
DEHYDRATOR
A
B
C
D
E
F
G
H
I
J
K
L
1
2
3
4
5
6
7
8
9
10
11
12
13
14
15
16
17

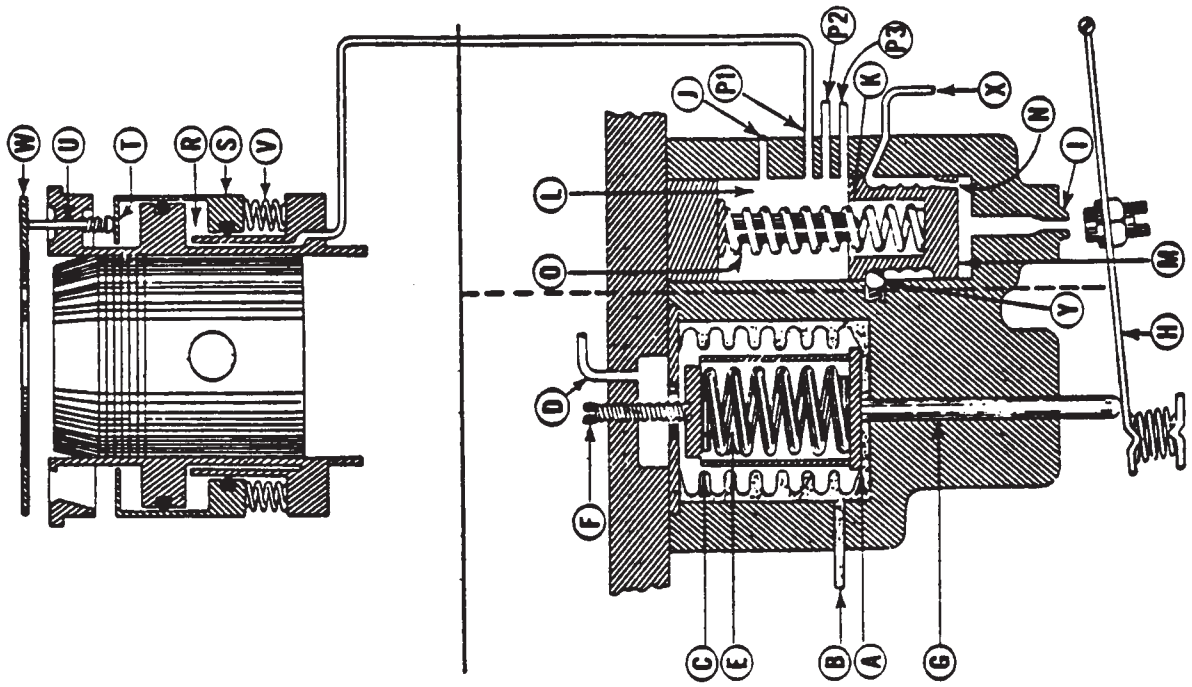

FIG. II

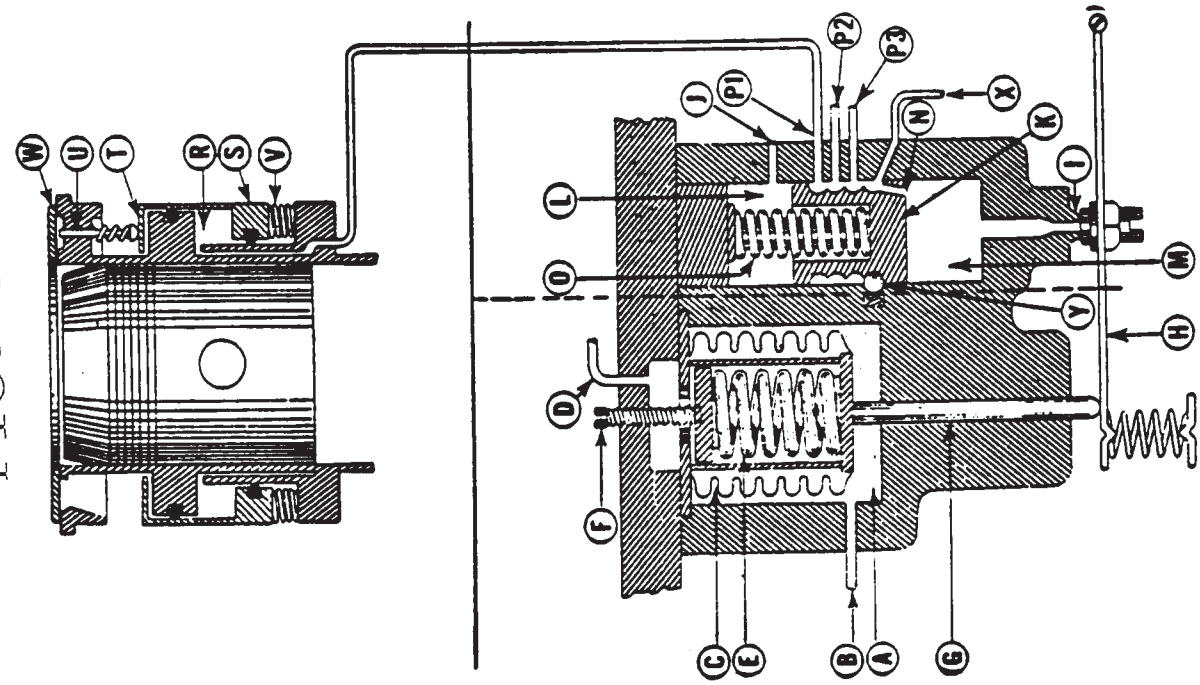

FIG. I

(COURTESY OF TRANE COMPANY)

RA-0014

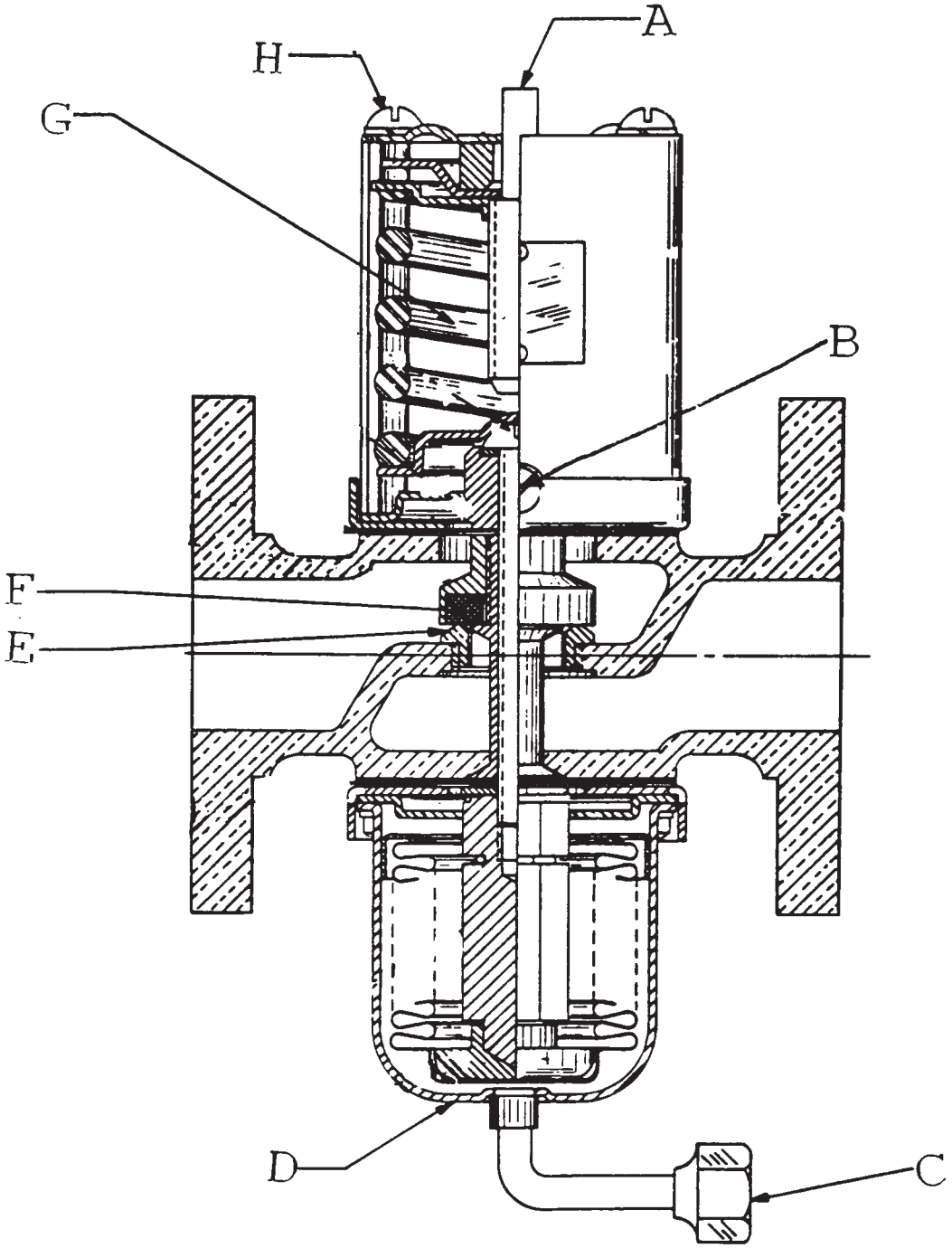

(COURTESY OF JOHNSON CONTROLS)