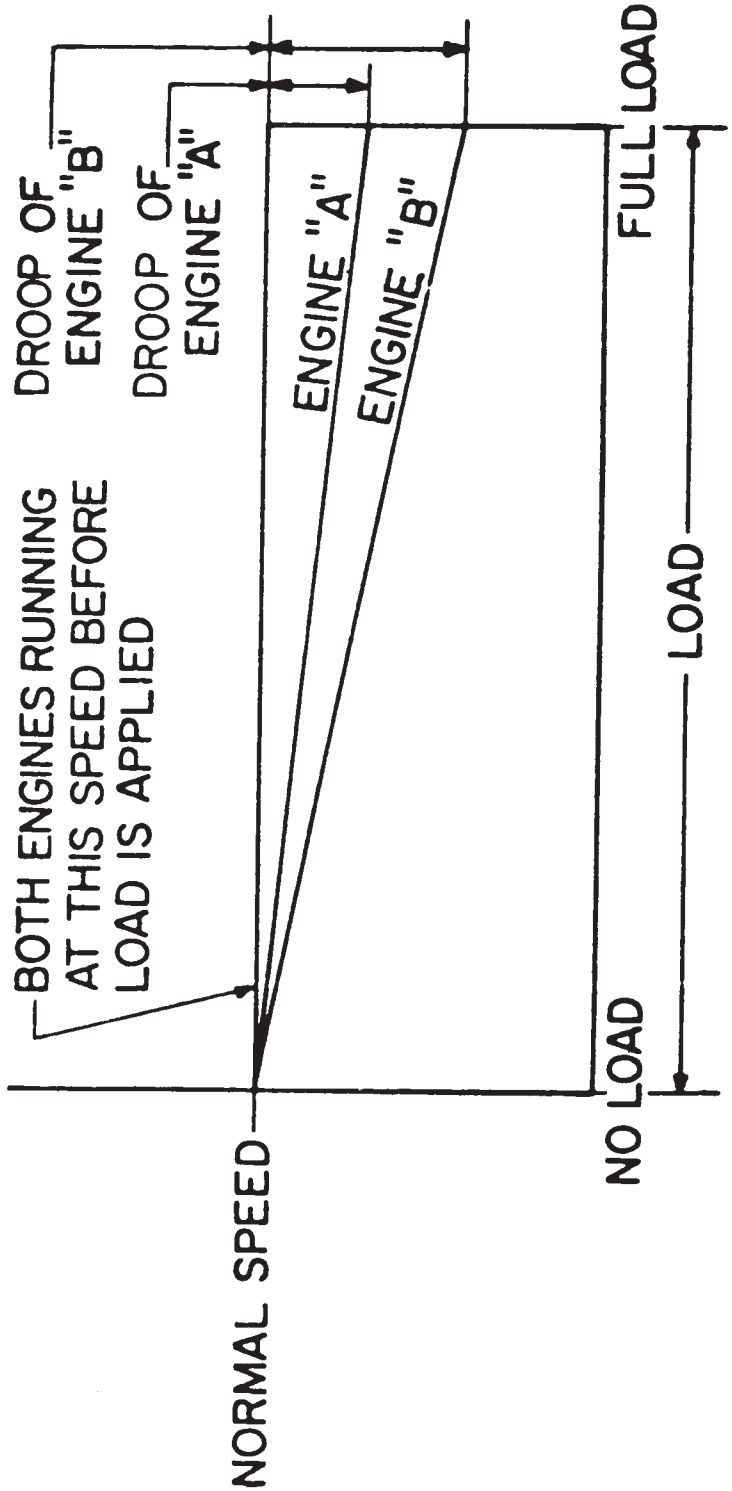
NORMAL SPEED
BOTH ENGINES RUNNING AT THIS SPEED BEFORE LOAD IS APPLIED
DROOP OF ENGINE "B"
DROOP OF ENGINE "A"
ENGINE "A"
ENGINE "B"
NO LOAD
FULL LOAD
LOAD

MO-0110

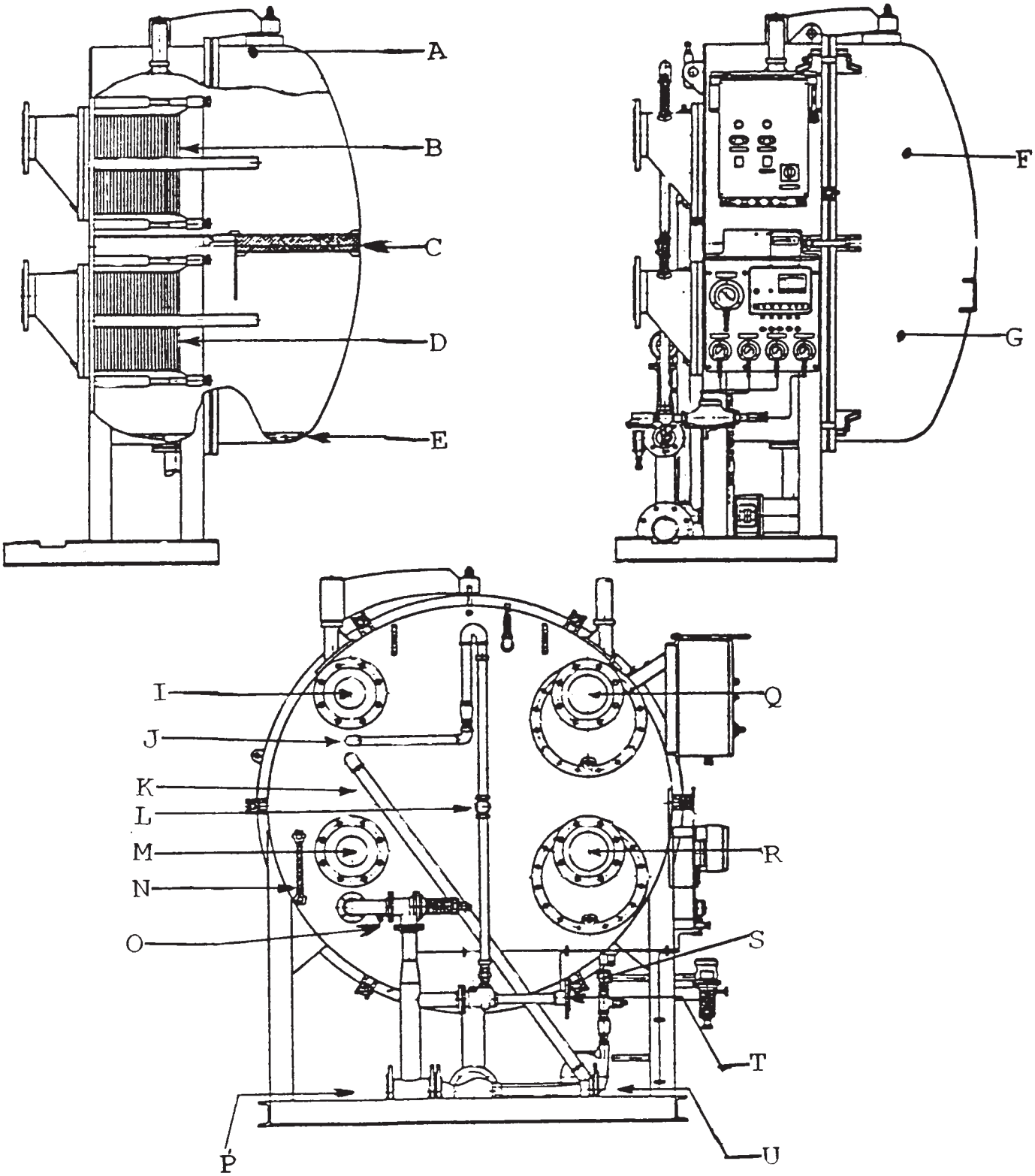

(COURTESY OF ALFA-LAVAL [MARINE AND POWER DIVISION])

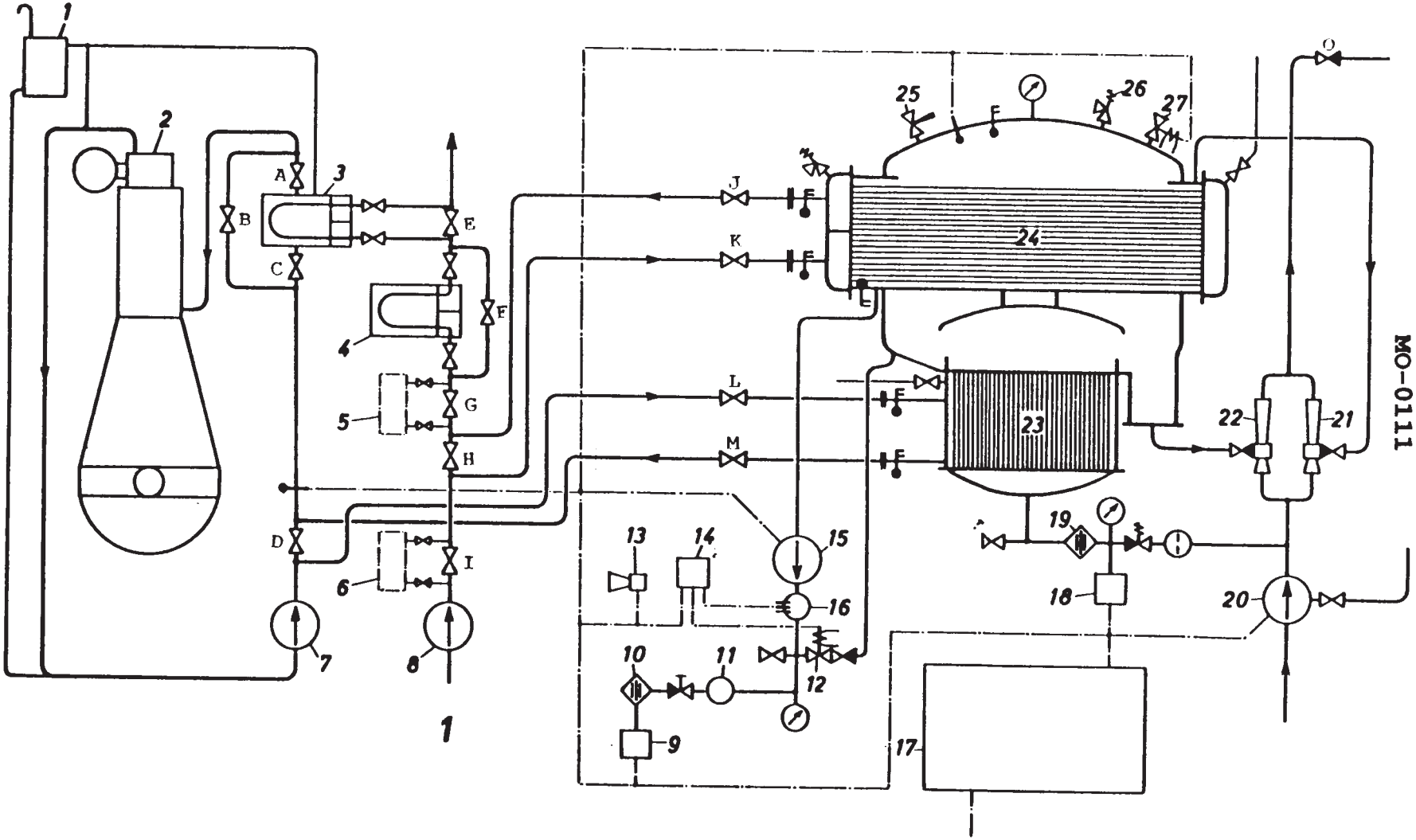

(COURTESY OF G.E.C. GAD PUBLISHERS)

MO-0111

MO-0112

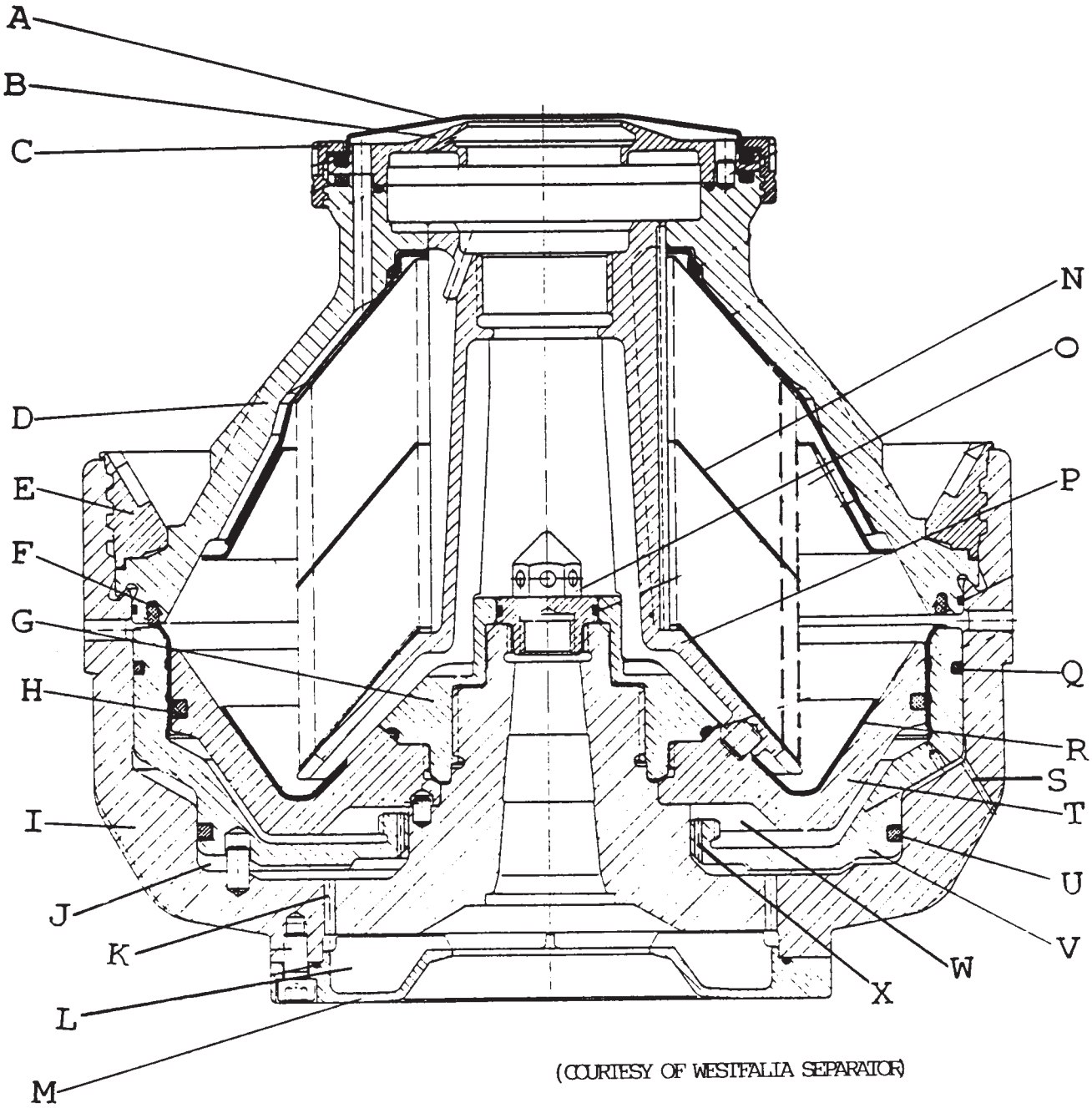

(COURTESY OF WESTFALIA SEPARATOR)

MO-0113

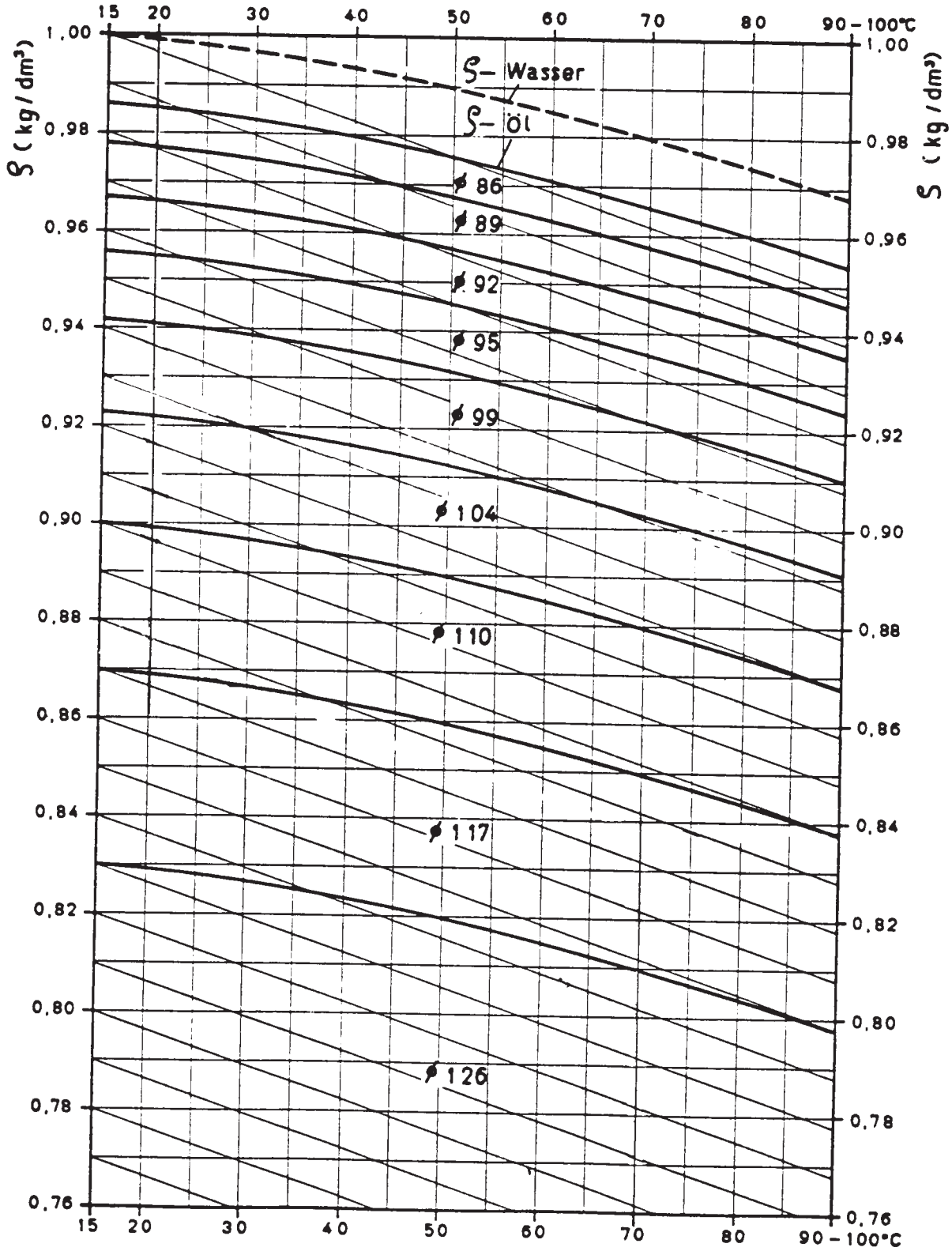

Separating temperature

(COURTESY OF WESTFALIA SEPARATOR)

MO-0114

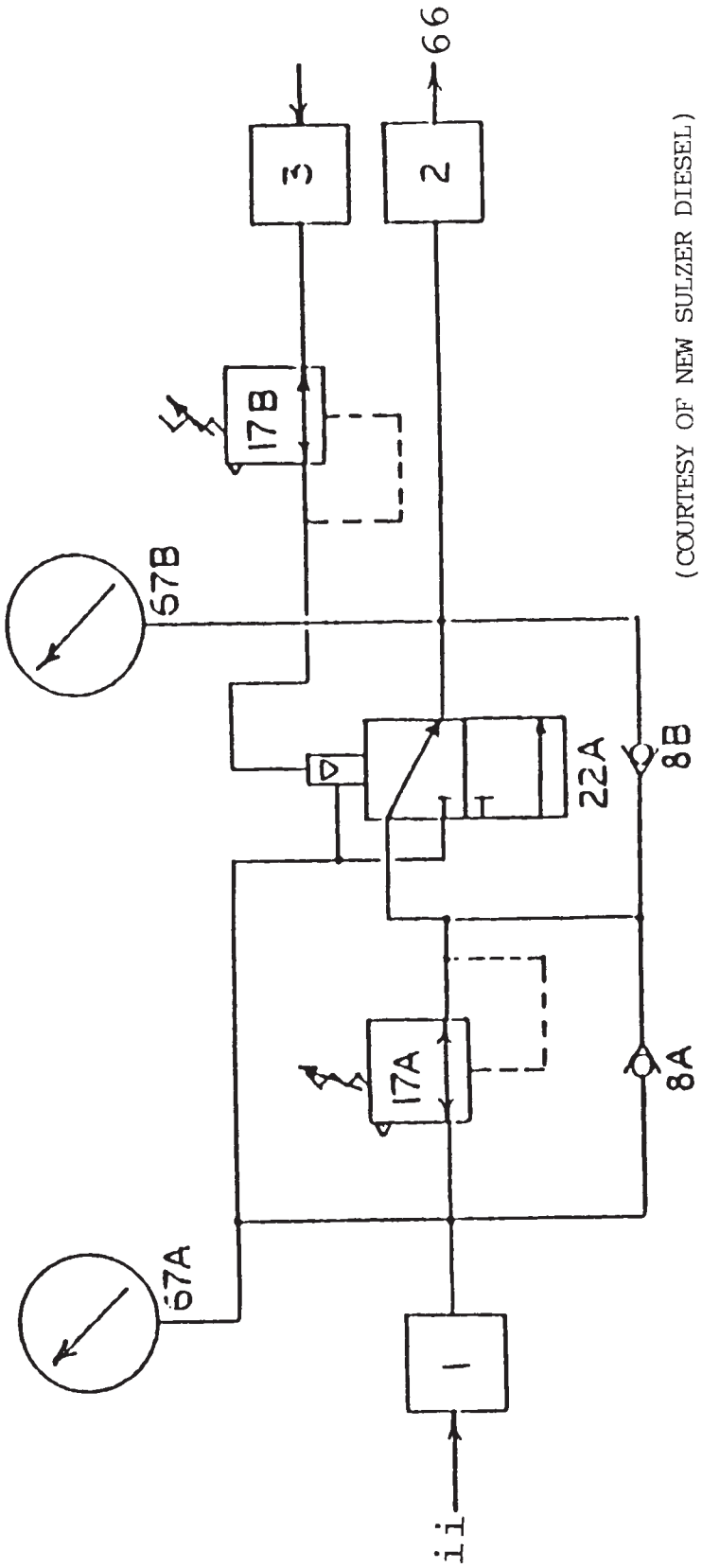

(COURTESY OF NEW SULZER DIESEL)

MO-0115

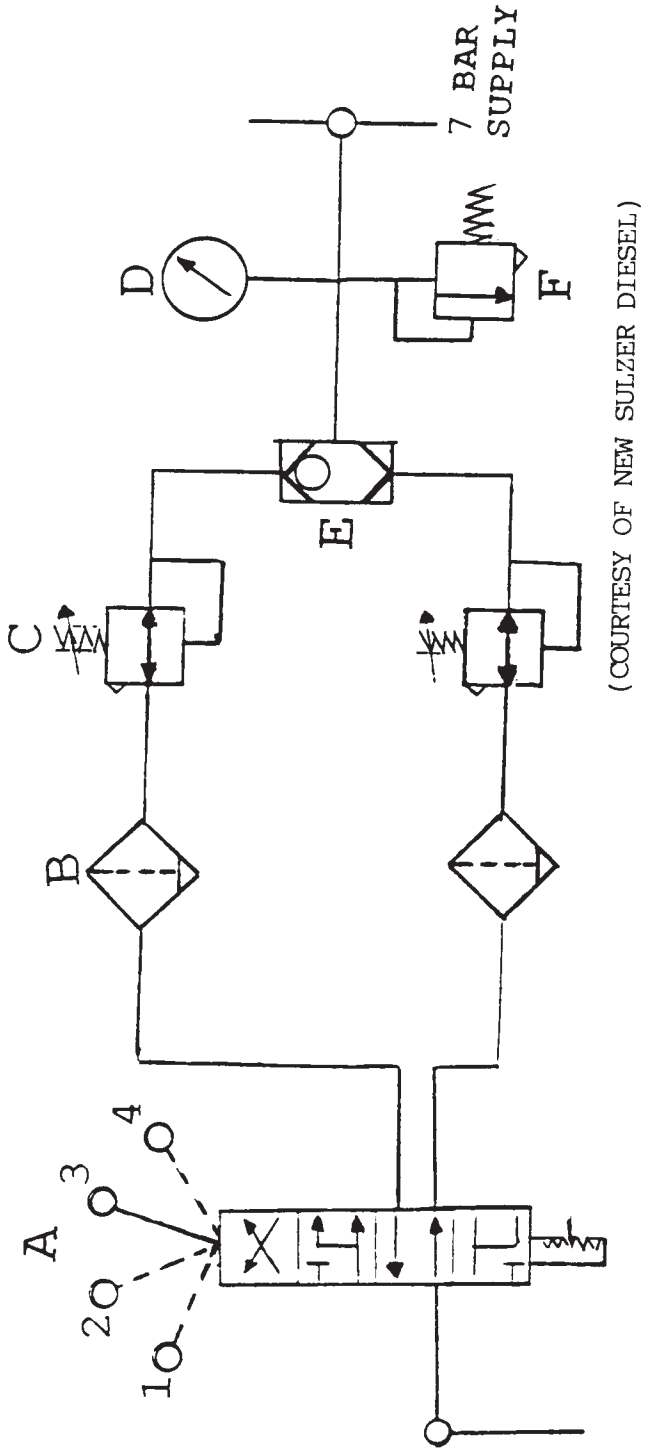

(COURTESY OF NEW SULZER DIESEL)

MO-0116

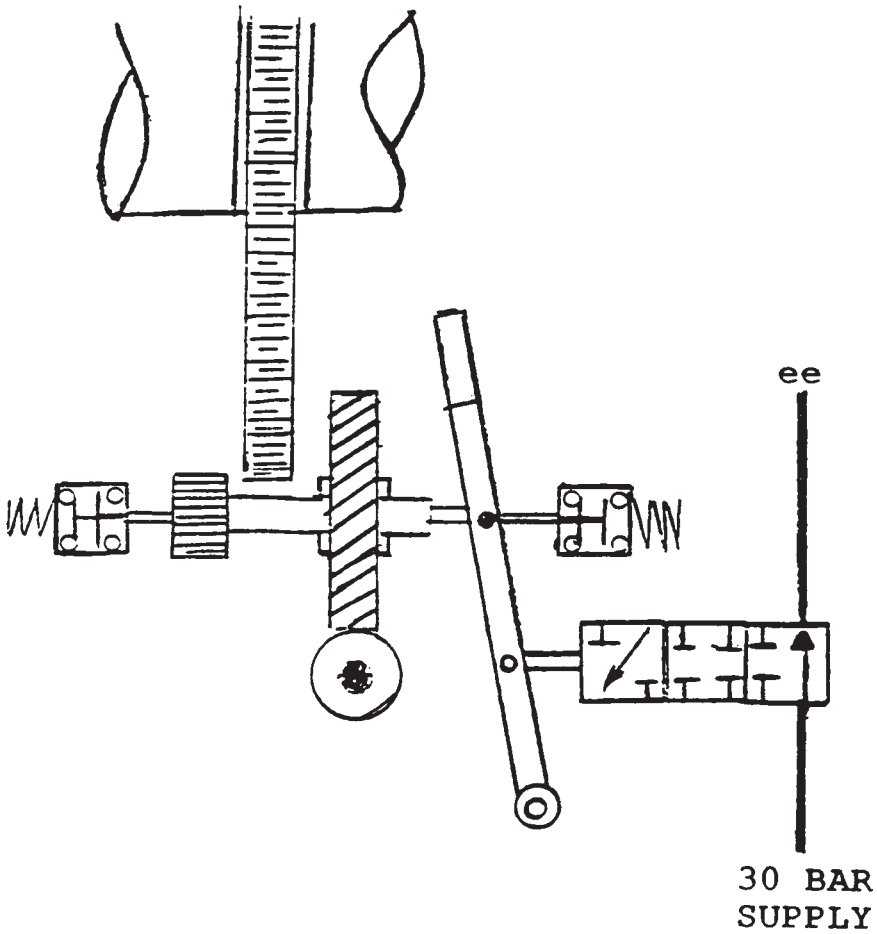

(COURTESY OF NEW SULZER DIESEL)

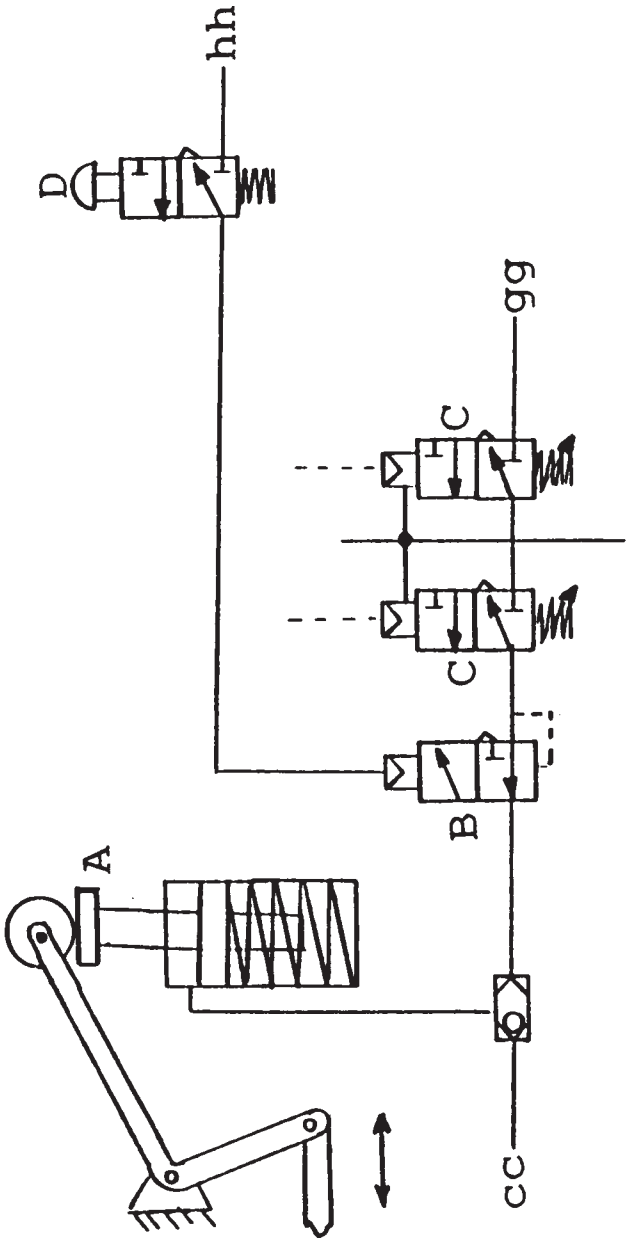

(COURTESY OF NEW SULZER DIESEL)

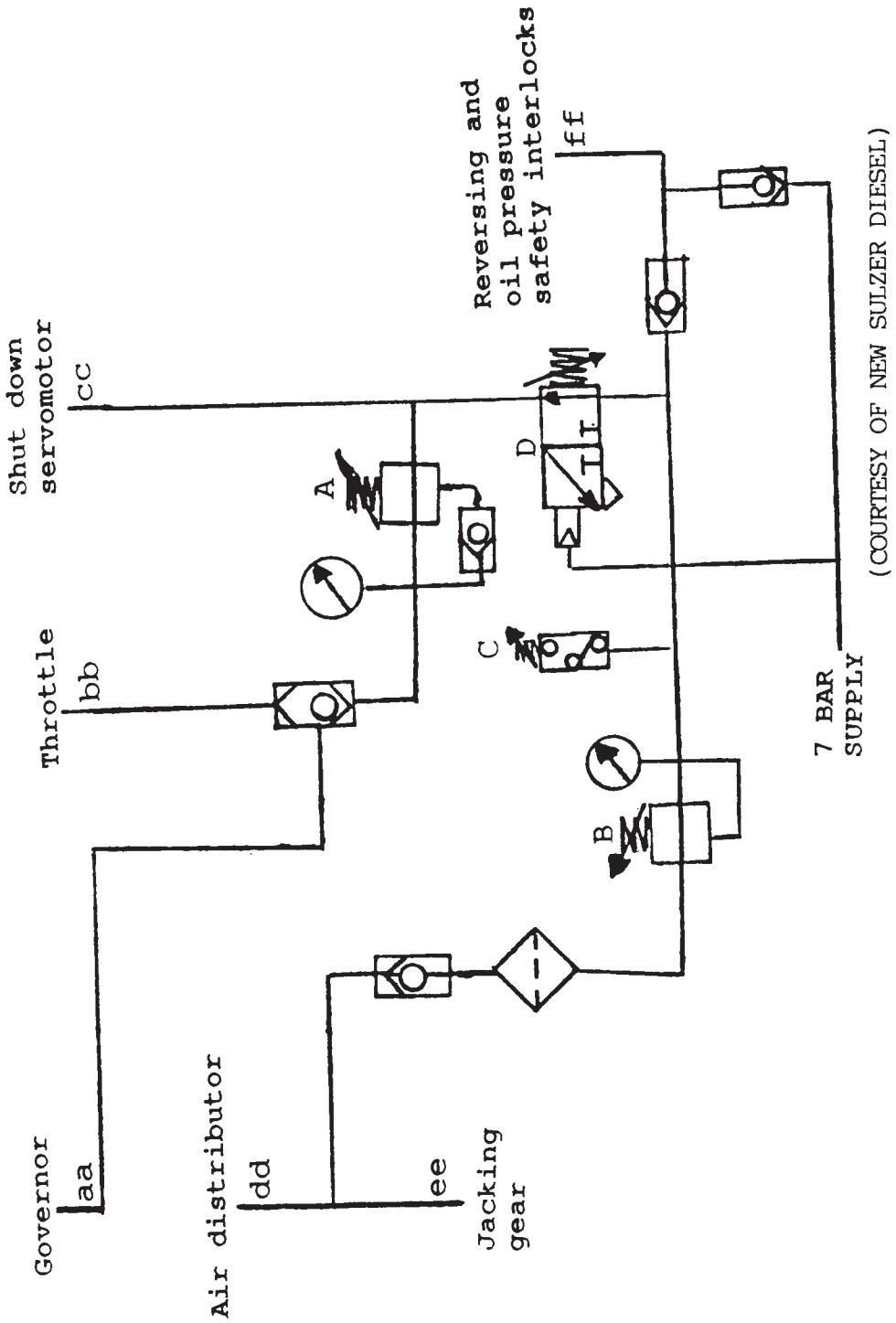
Shut down servomotor
cc
Throttle
bb
Governor
aa
Air distributor
dd
ee
Jacking gear
Reversing and oil pressure safety interlocks
ff
A
B
C
D
7 BAR SUPPLY
(COURTESY OF NEW SULZER DIESEL)

MO-0119

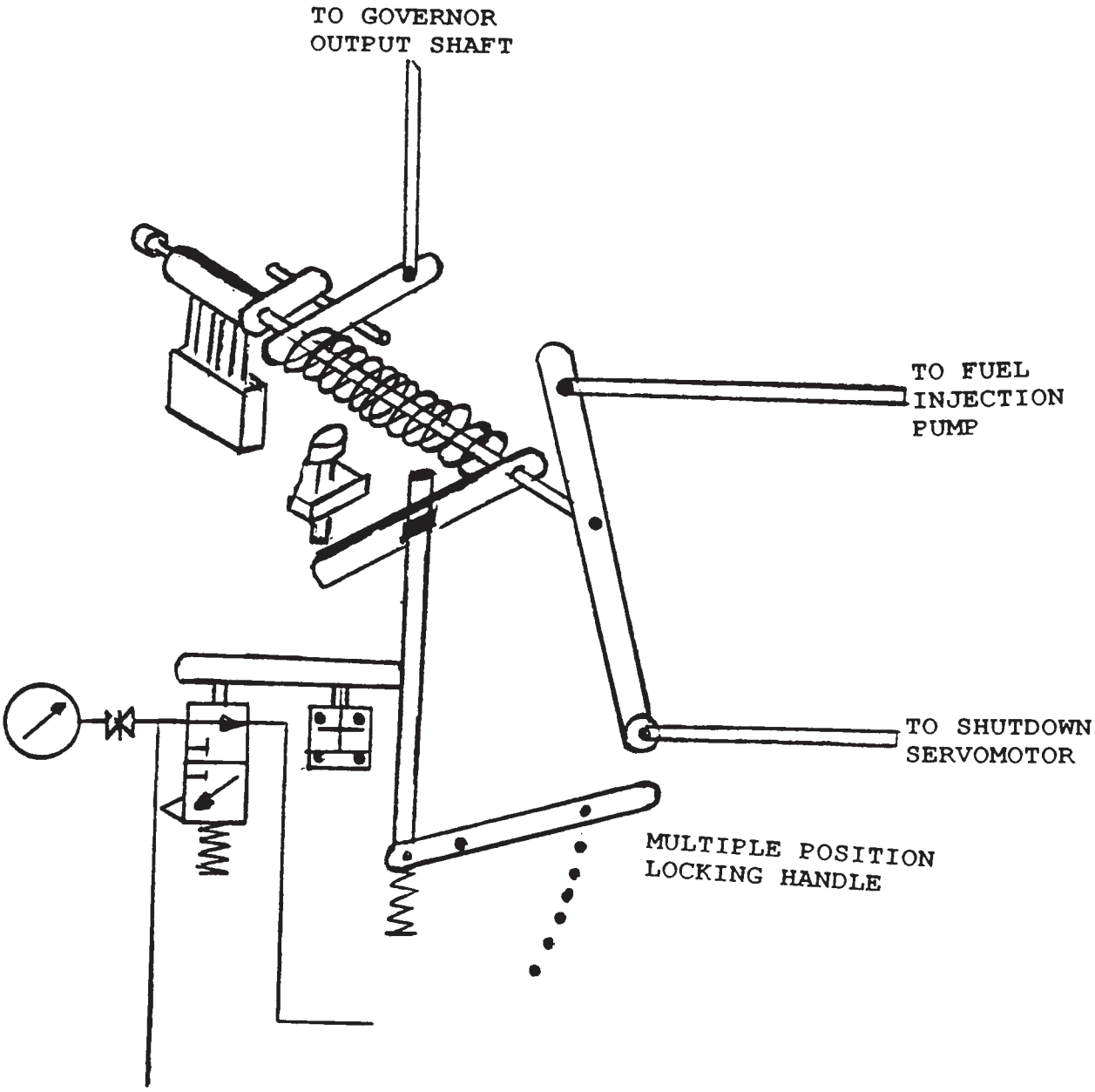

(COURTESY OF NEW SULZER DIESEL)

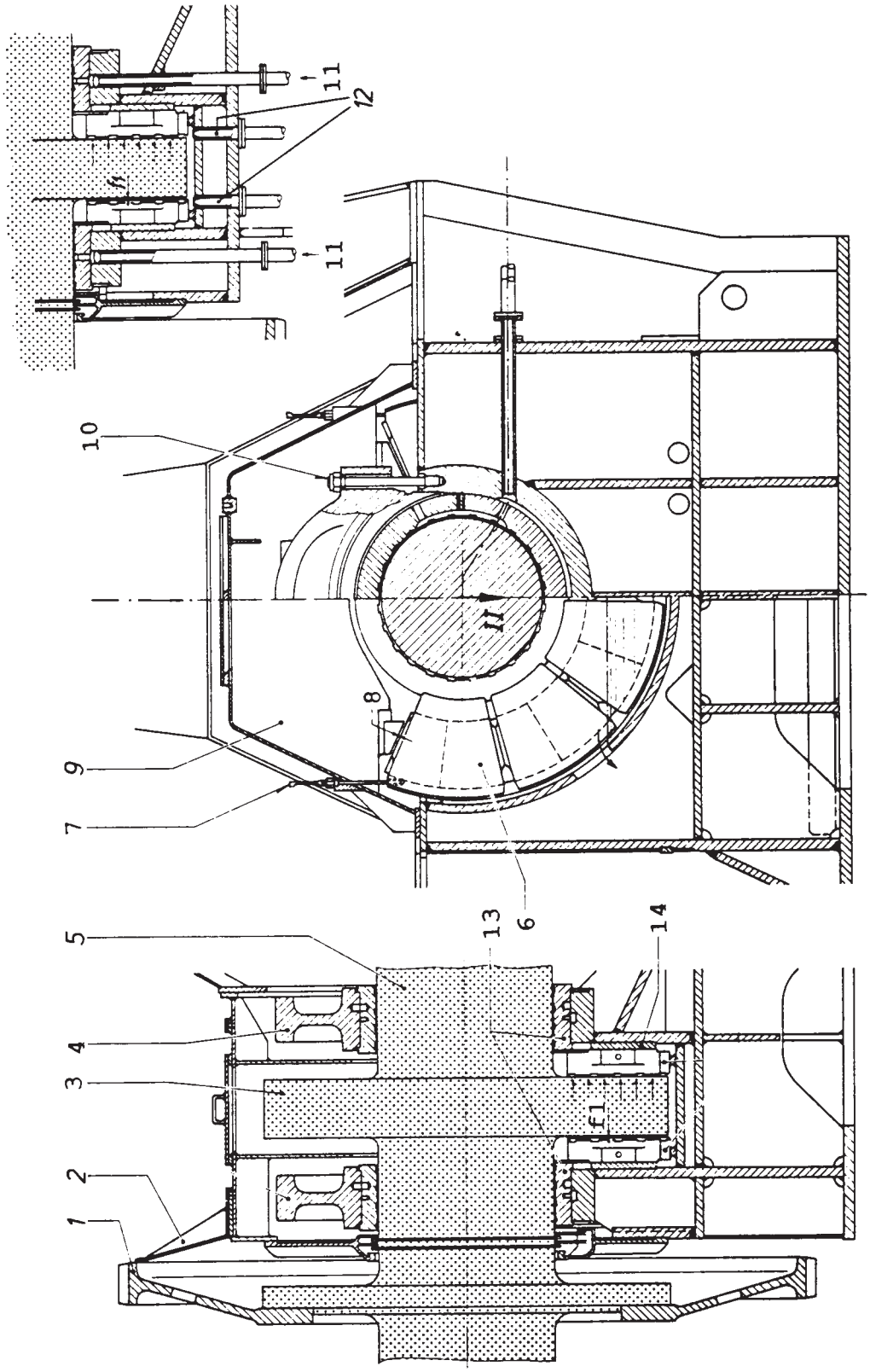

(COURTESY OF NEW SULZER DIESEL)

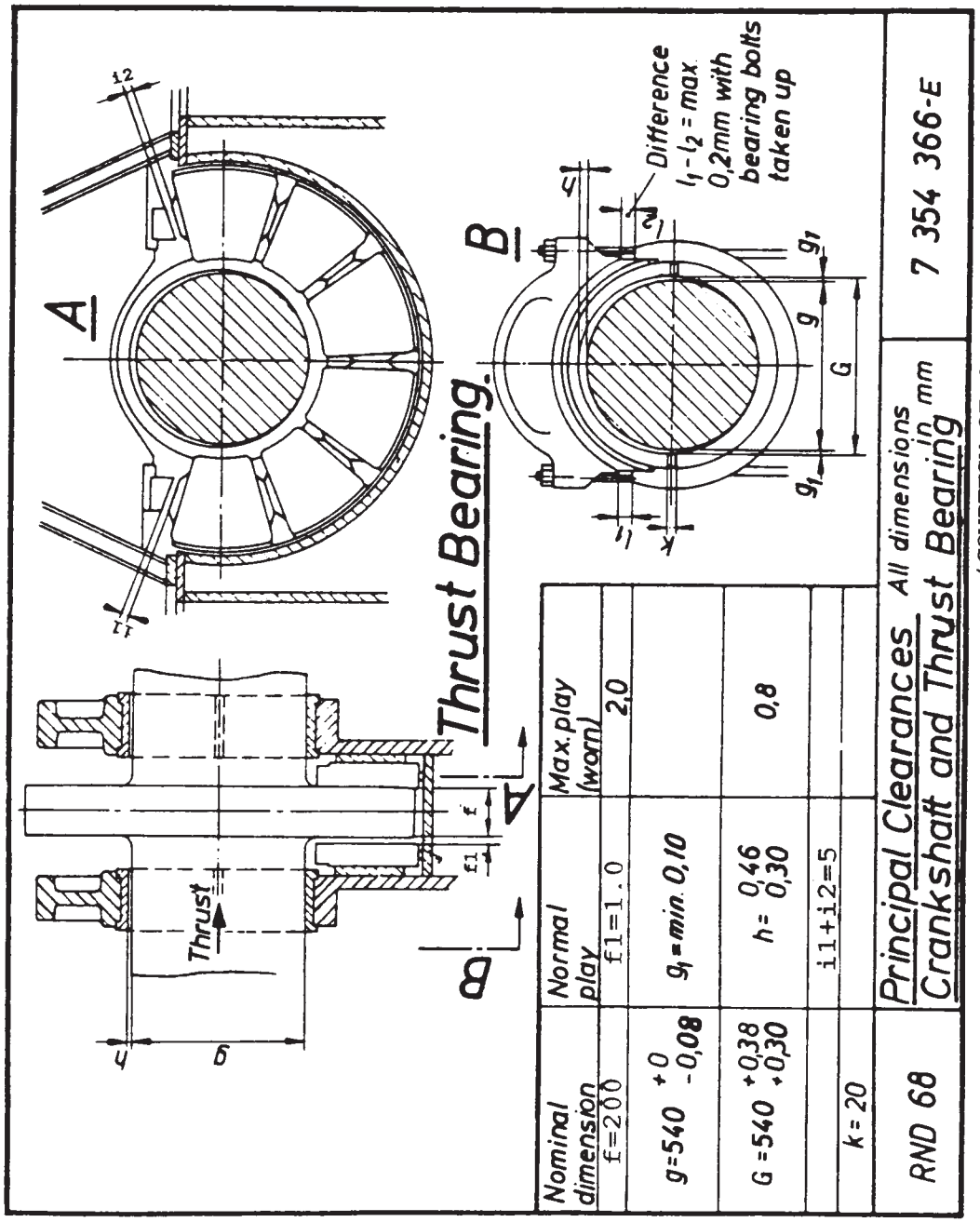

Nominal dimension	Normal play	Max. play (worn)
f=200	f1=1.0	2,0
g=540 +0 −0,08	g_1=min. 0,10	
G=540 +0,38 +0,30	h= 0,46 0,30	0,8
k=20	i1+i2=5	

(COURTESY OF NEW SULZER DIESEL)

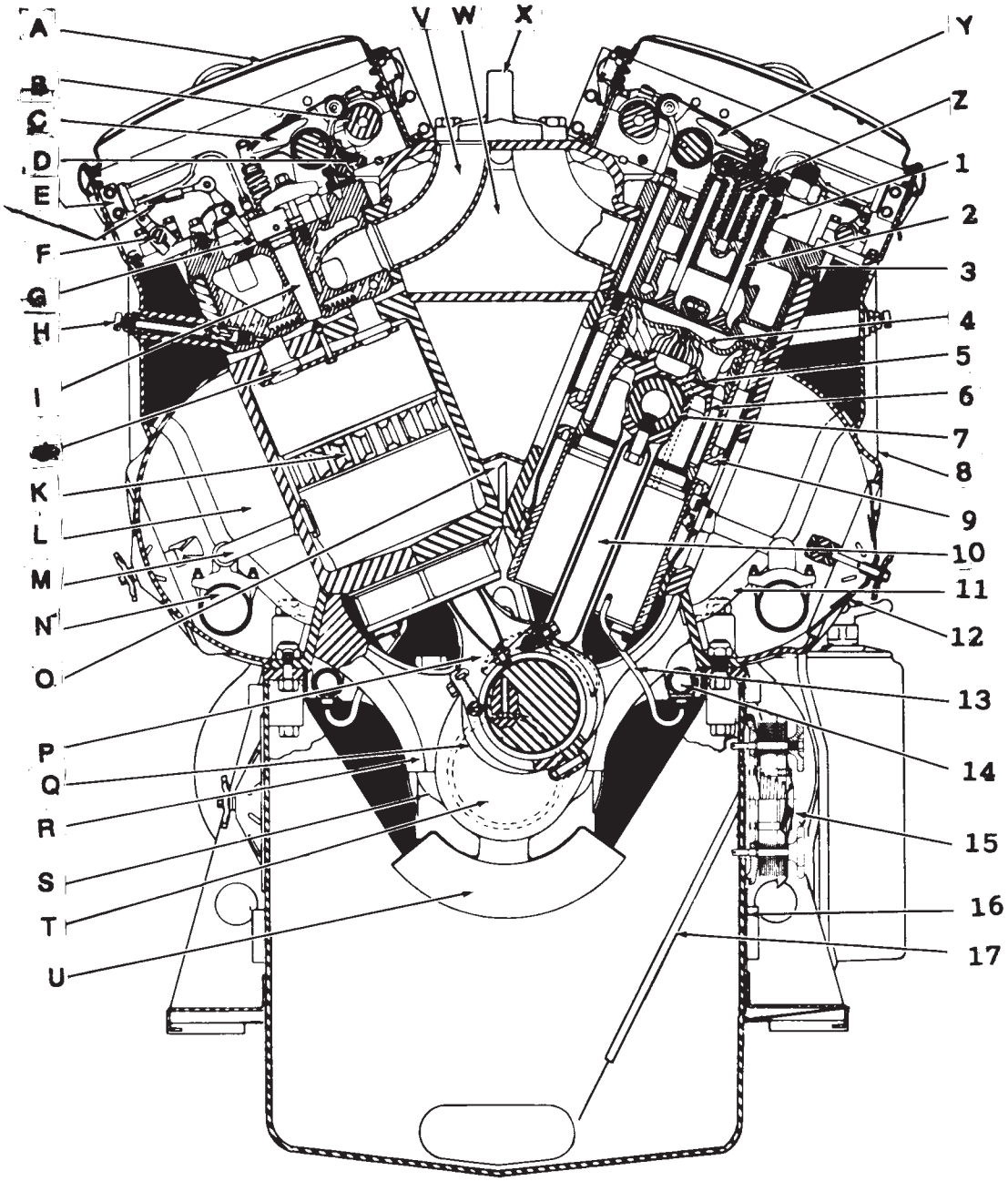

(DRAWING FURNISHED AND COPYRIGHT © RESERVED BY ELECTRO-MOTIVE DIVISION-GENERAL MOTOR CORPORATION)
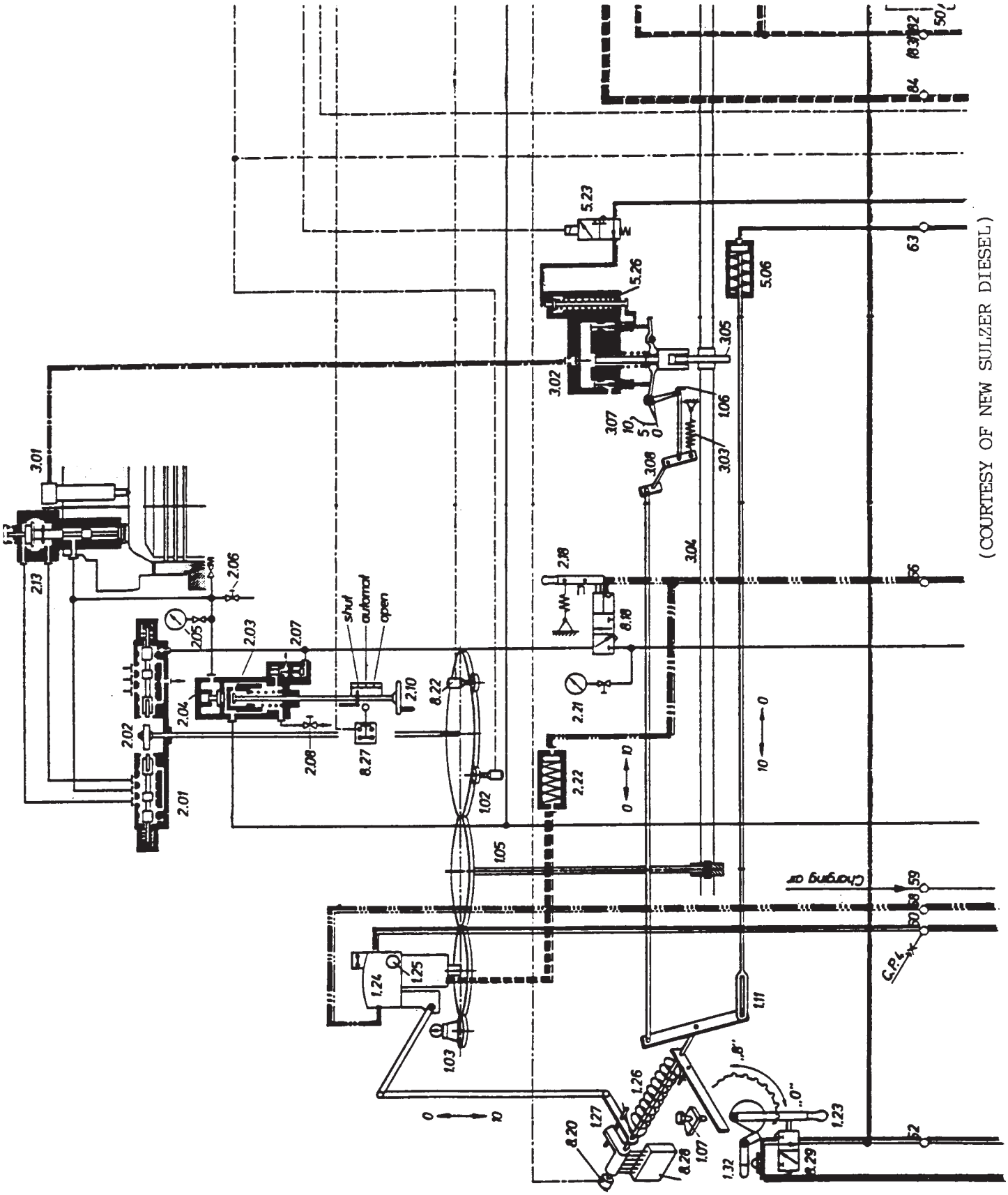
MO-0123-A
Page 1 of a two page illustration