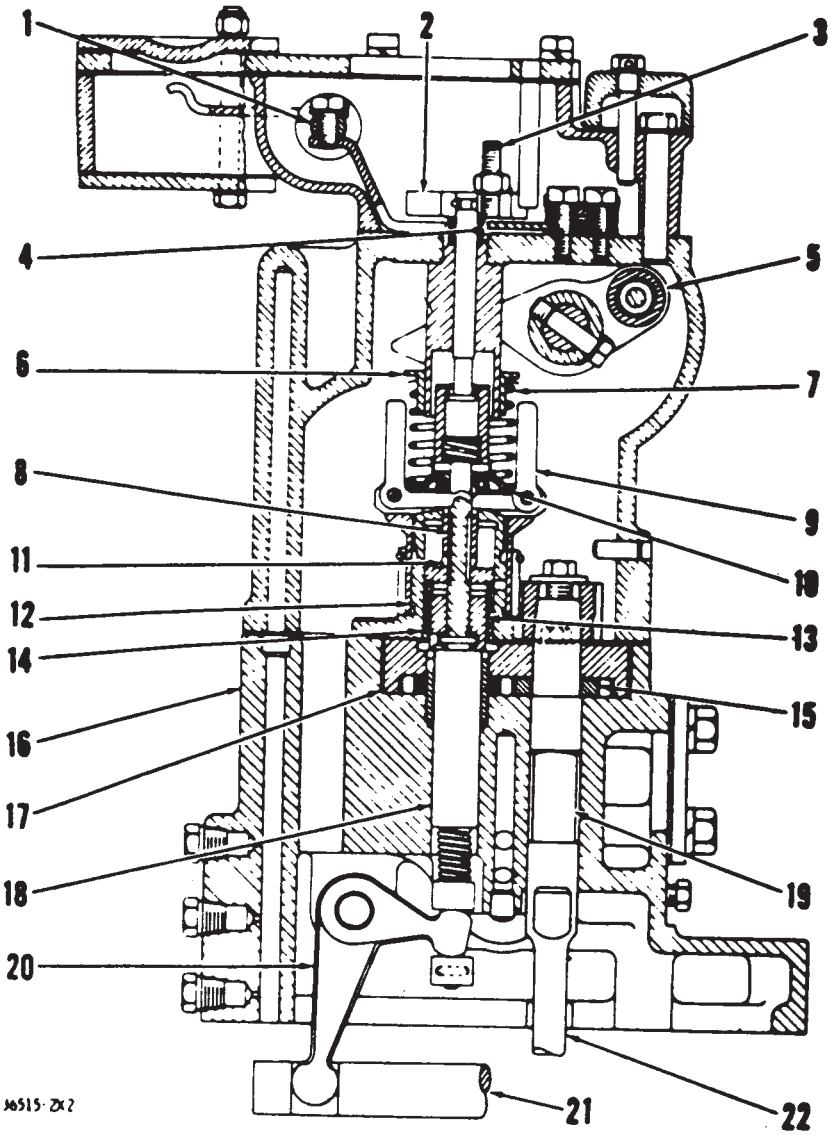

GOVERNOR

1. Shutoff shaft. 2. Collar. 3. Adjusting screw. 4. Stop bar. 5. Lever assembly. 6. Seat assembly. 7. Governor spring. 8. Valve. 9. Weight assembly. 10. Seat. 11. Oil passage. 12. Cylinder. 13. Piston. 14. Sleeve. 15. Oil pump gear. 16 Governor drive housing. 17. Oil pump cover. 18. Pin assembly. 19. Shaft assembly. 20. Lever. 21. Fuel rack. 22. Drive pinion.

MO-0095

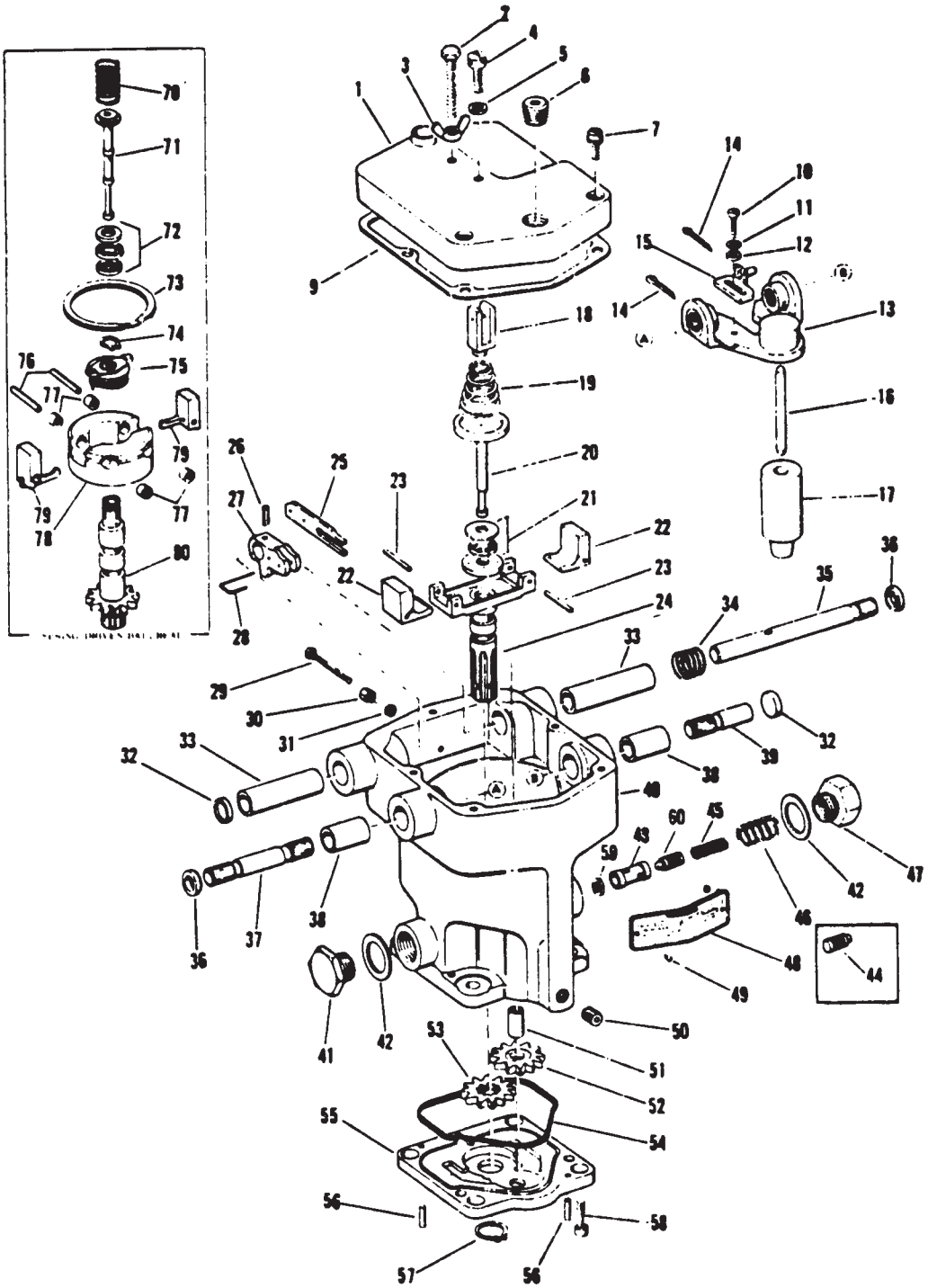
1
2
3
4
5
6
7
8
9
10
11
12
13
14
15
16
17
18
19
20
21
22
23
24
25
26
27
28
29
30
31
32
33
34
35
36
37
38
39
40
41
42
43
44
45
46
47
48
49
50
51
52
53
54
55
56
57
58
59
60
70
71
72
73
74
75
76
77
78
79
80

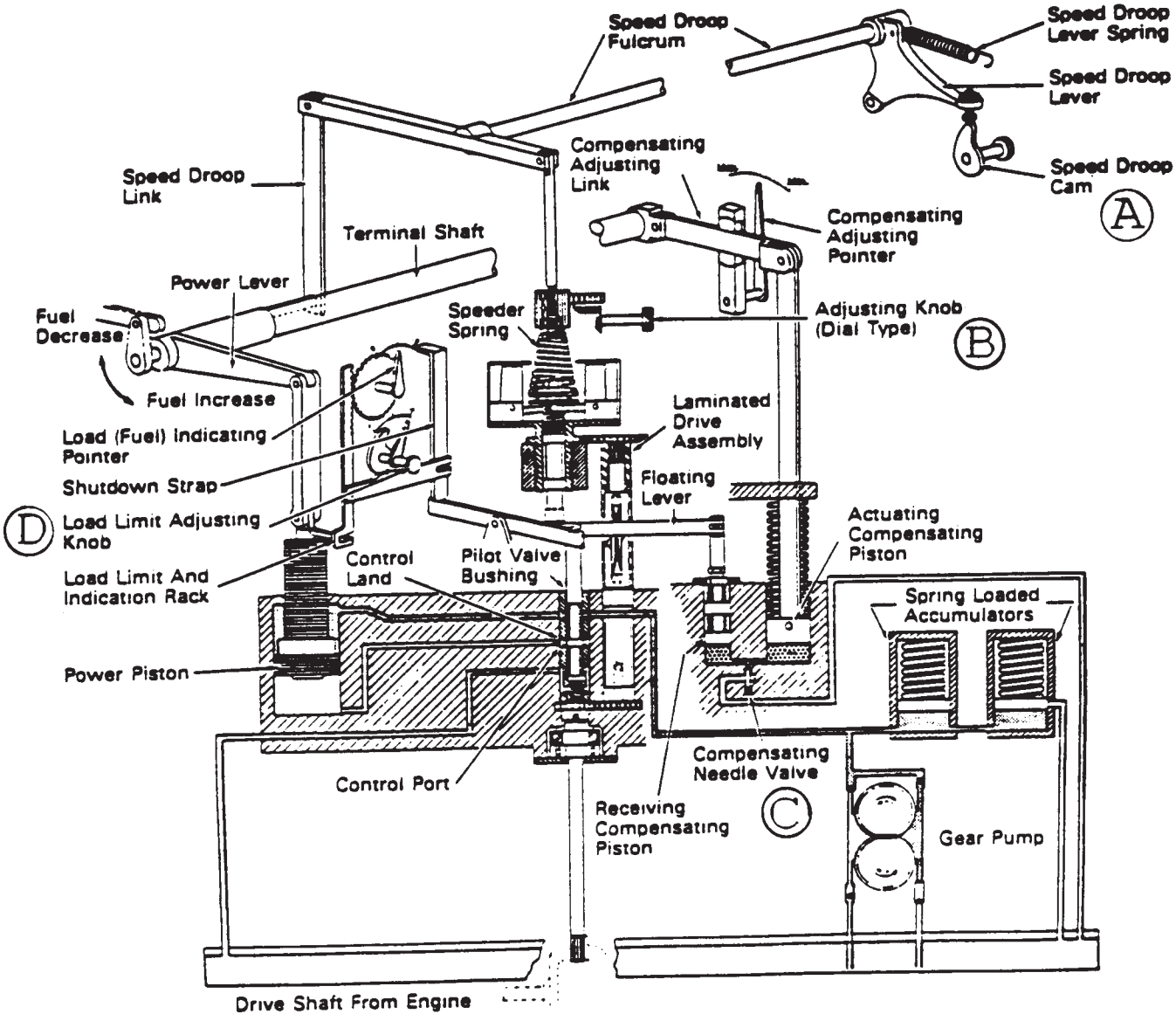

(COURTESY OF WOODWARD GOVERNOR COMPANY)

MO-0097

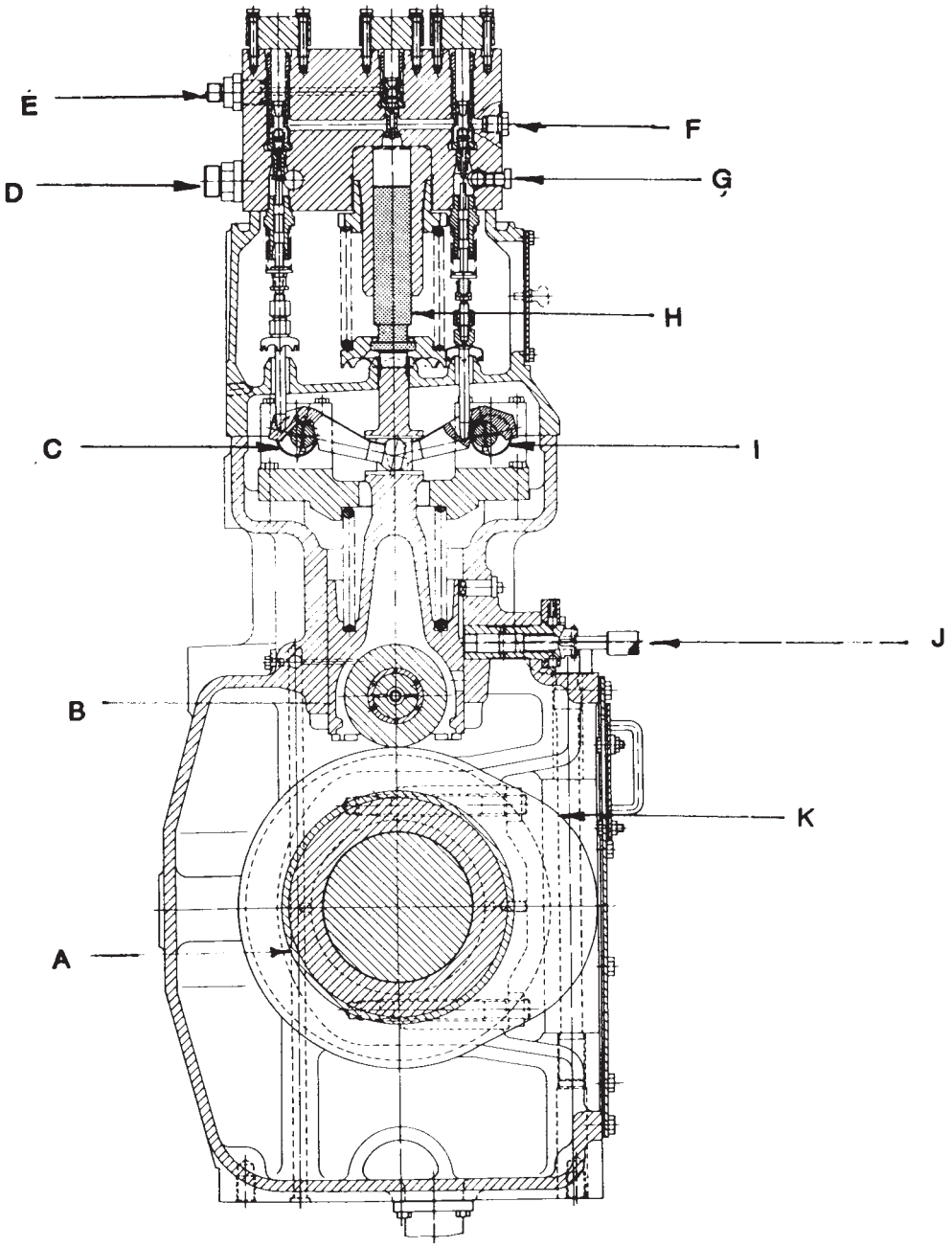

MO-0098

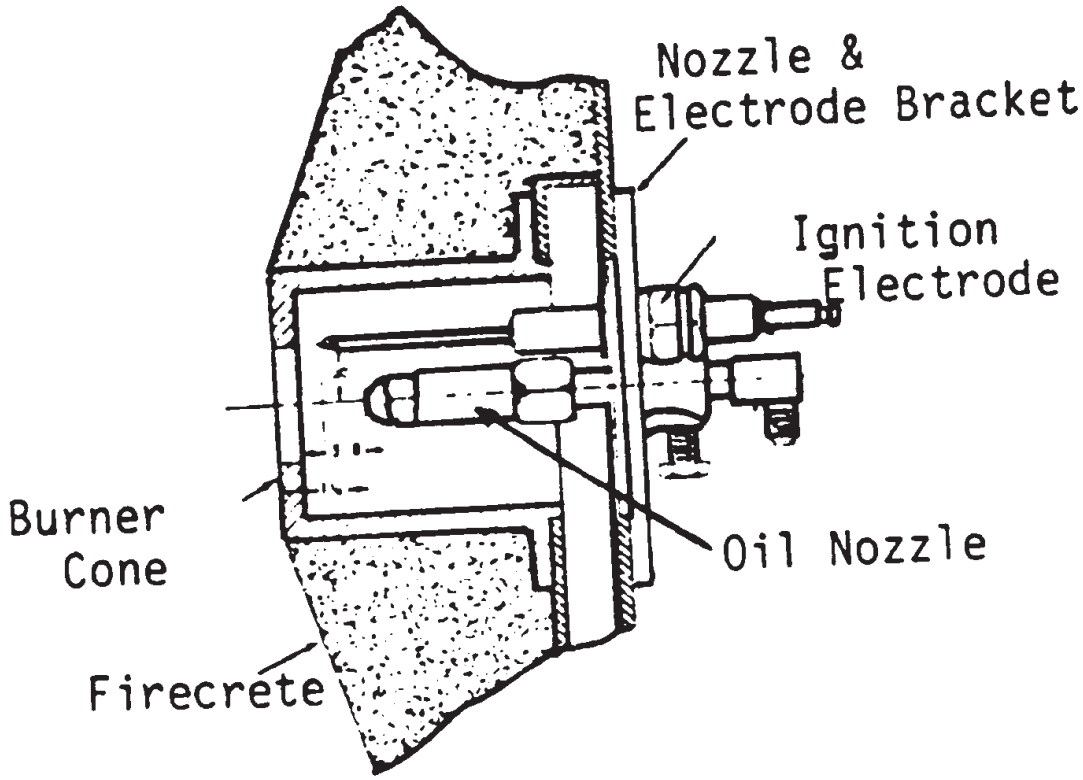
Nozzle &
Electrode Bracket
Ignition
Electrode
Burner
Cone
Oil Nozzle
Firecrete

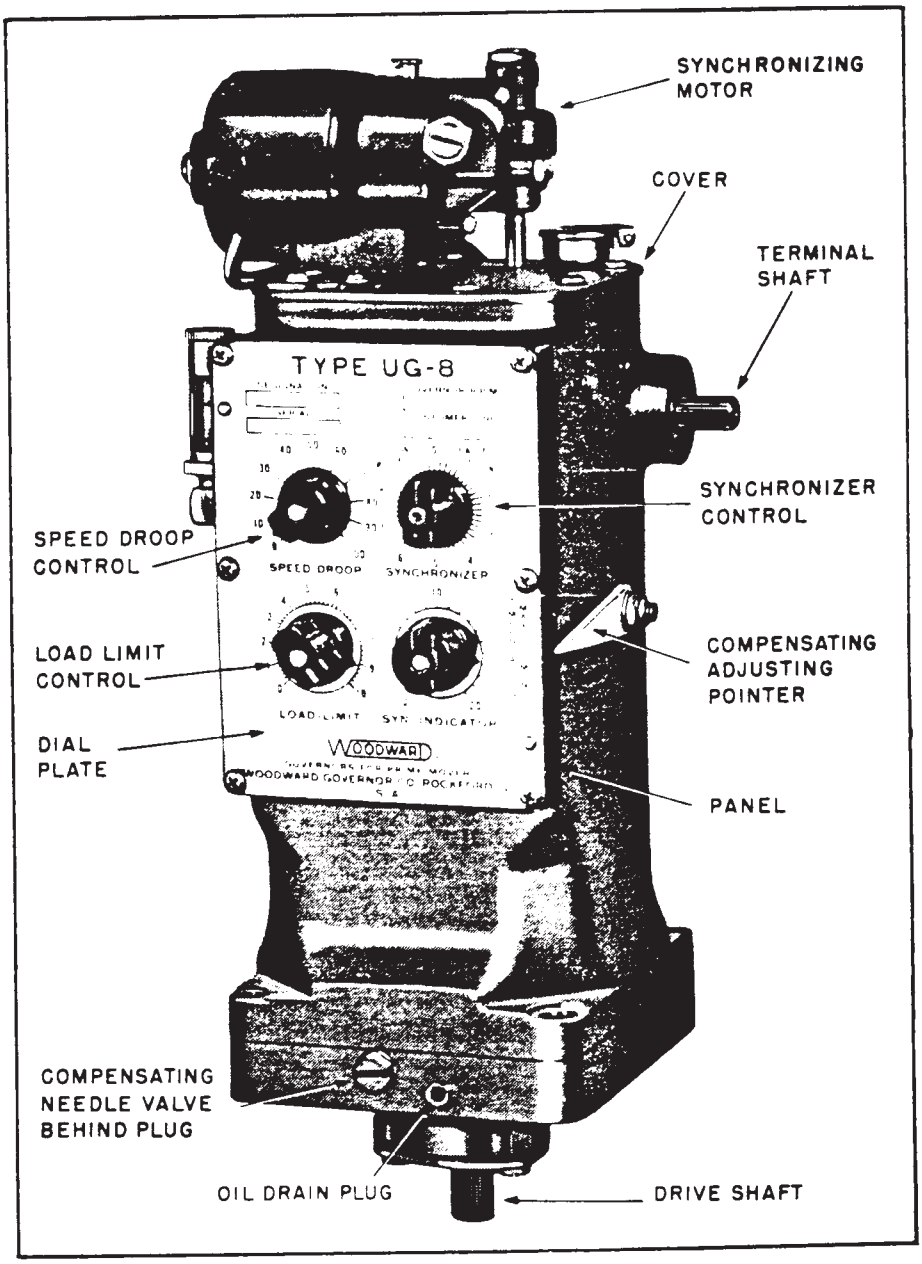

(COURTESY OF WOODWARD GOVERNOR COMPANY)

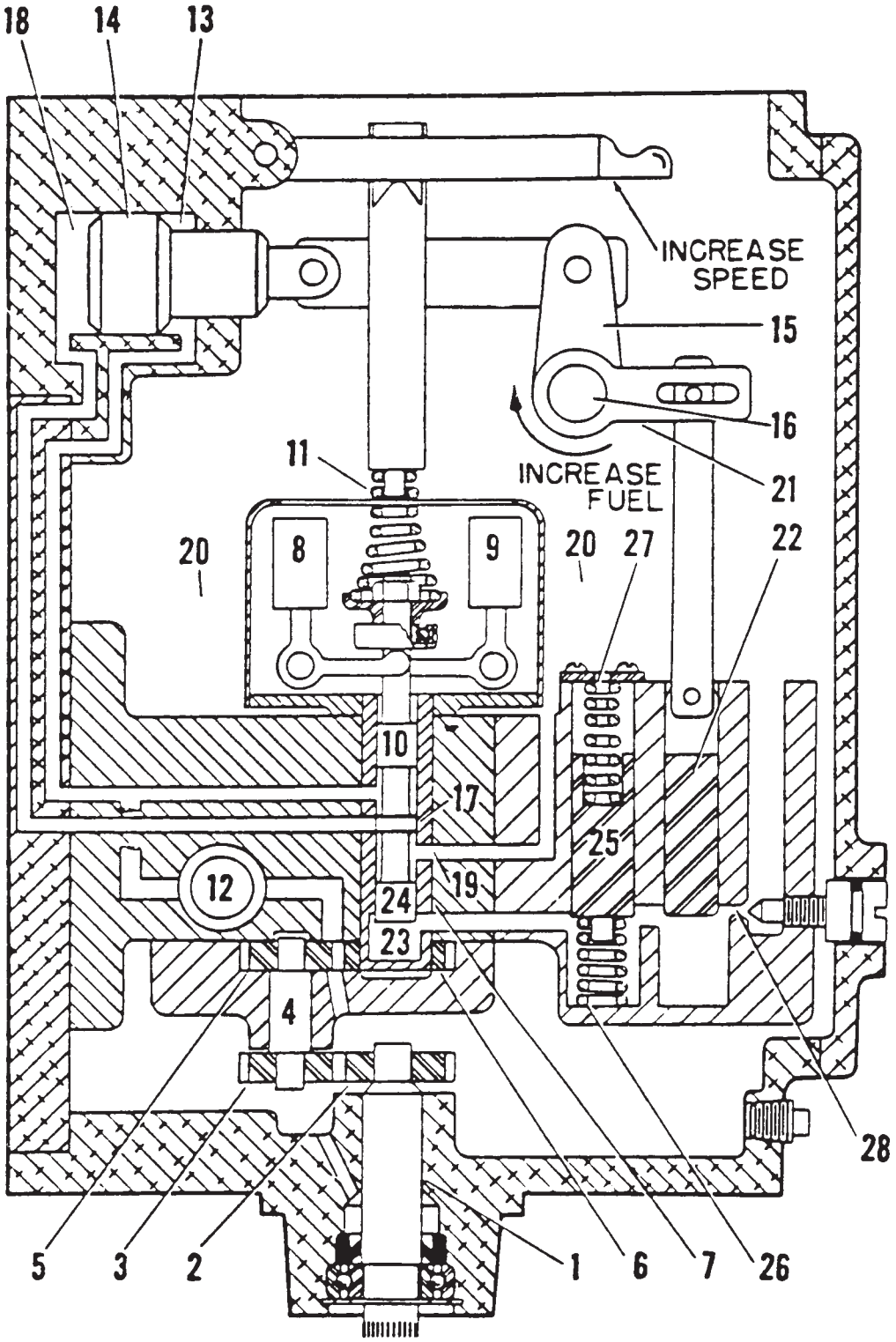
18
14
13
INCREASE SPEED
15
16
21
INCREASE FUEL
11
20
8
9
20
27
22
10
17
25
12
24
19
23
4
28
5
3
2
1
6
7
26

MO-0101

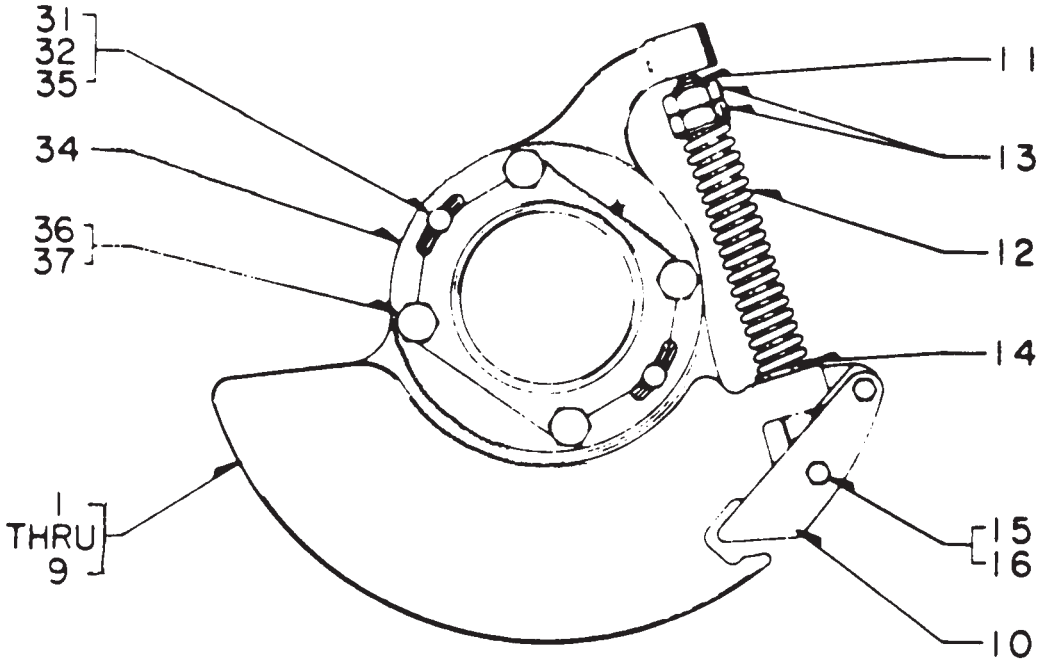

MO-0102

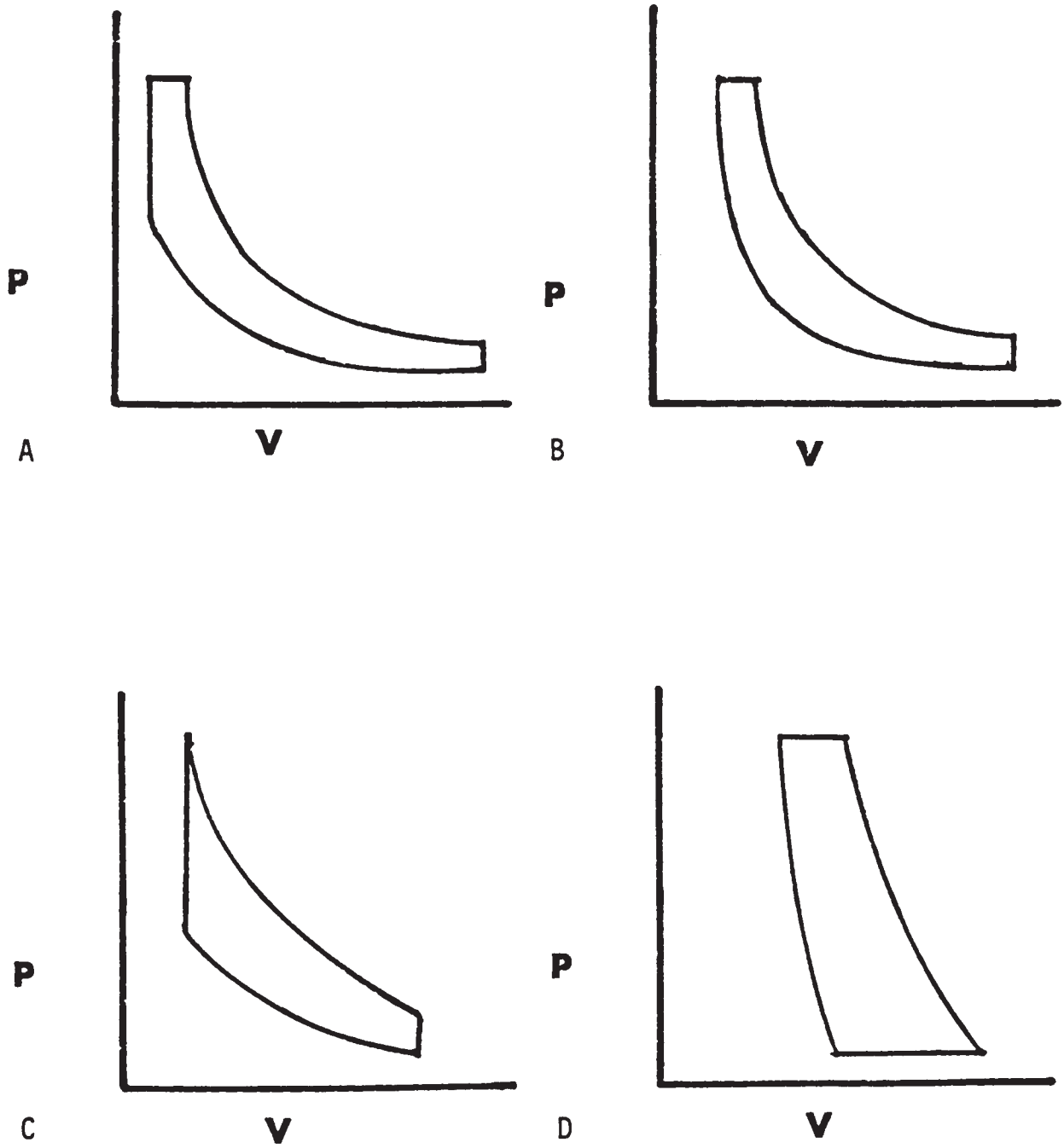

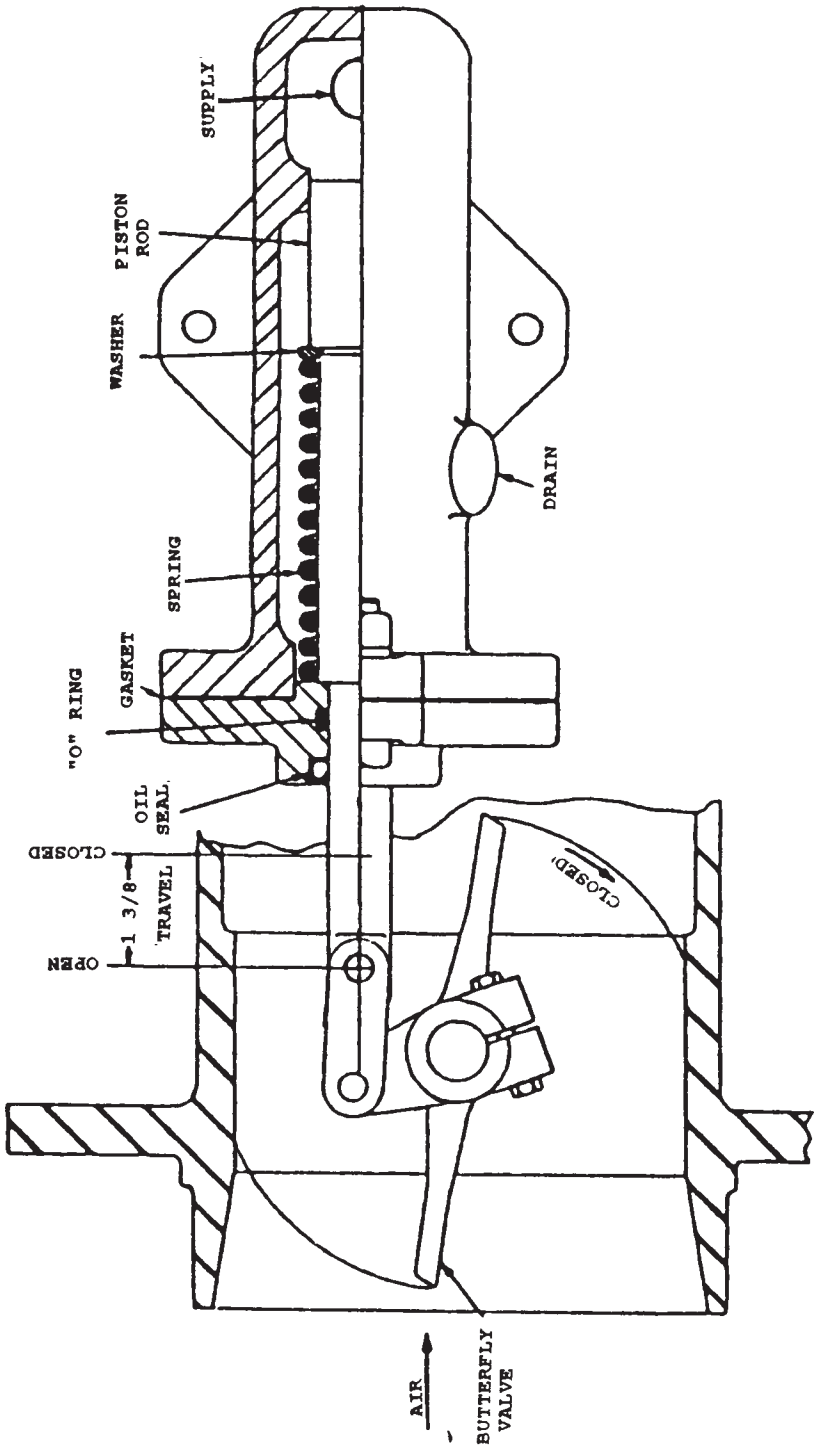
SUPPLY
PISTON ROD
WASHER
DRAIN
SPRING
GASKET
"O" RING
OIL SEAL
CLOSED
1 3/8
TRAVEL
OPEN
CLOSED
AIR
BUTTERFLY VALVE

MO-0104

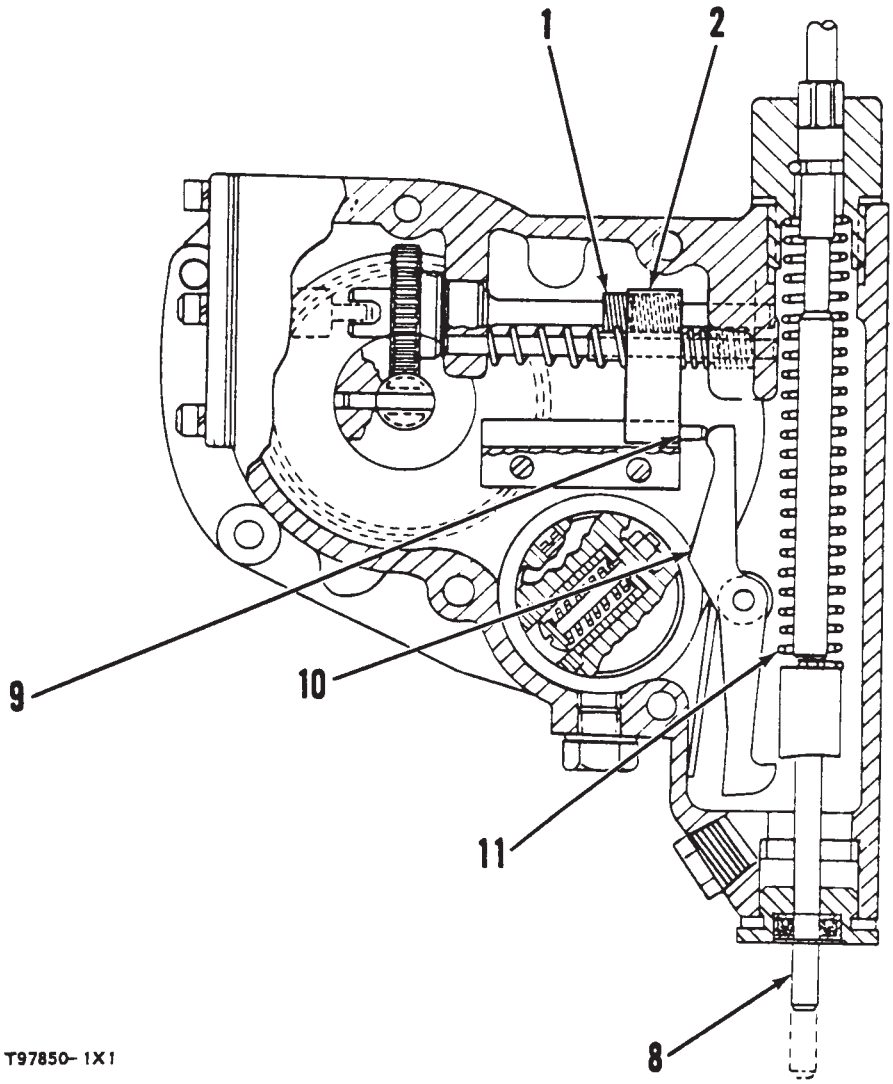

MO-0105

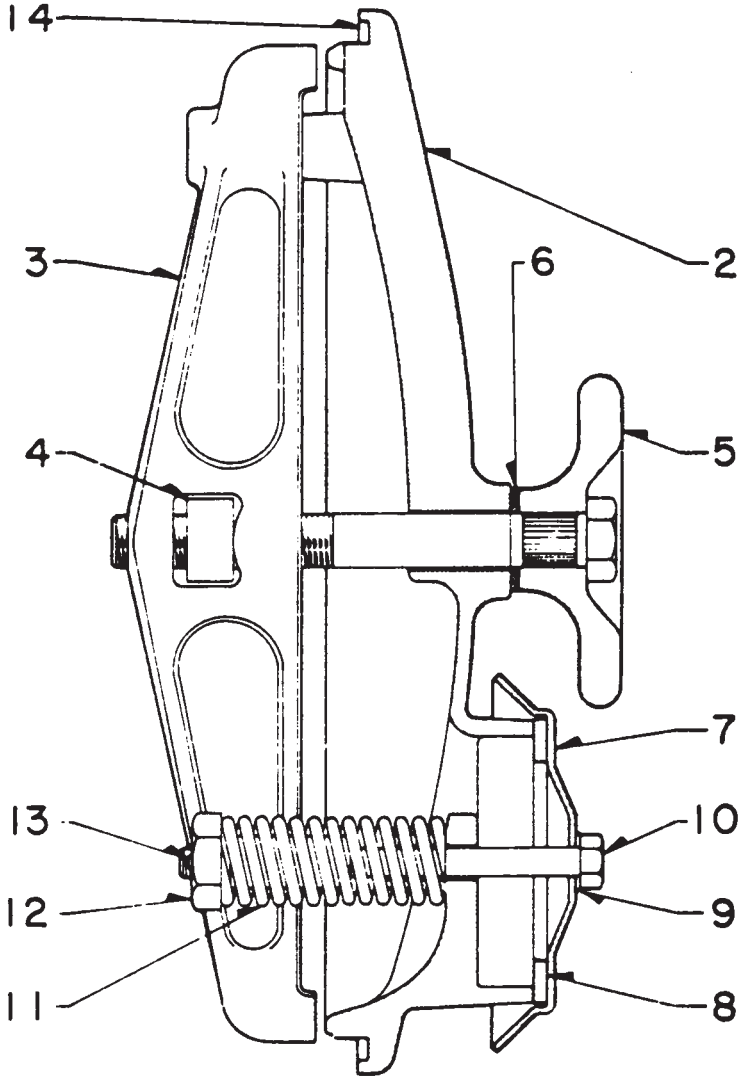

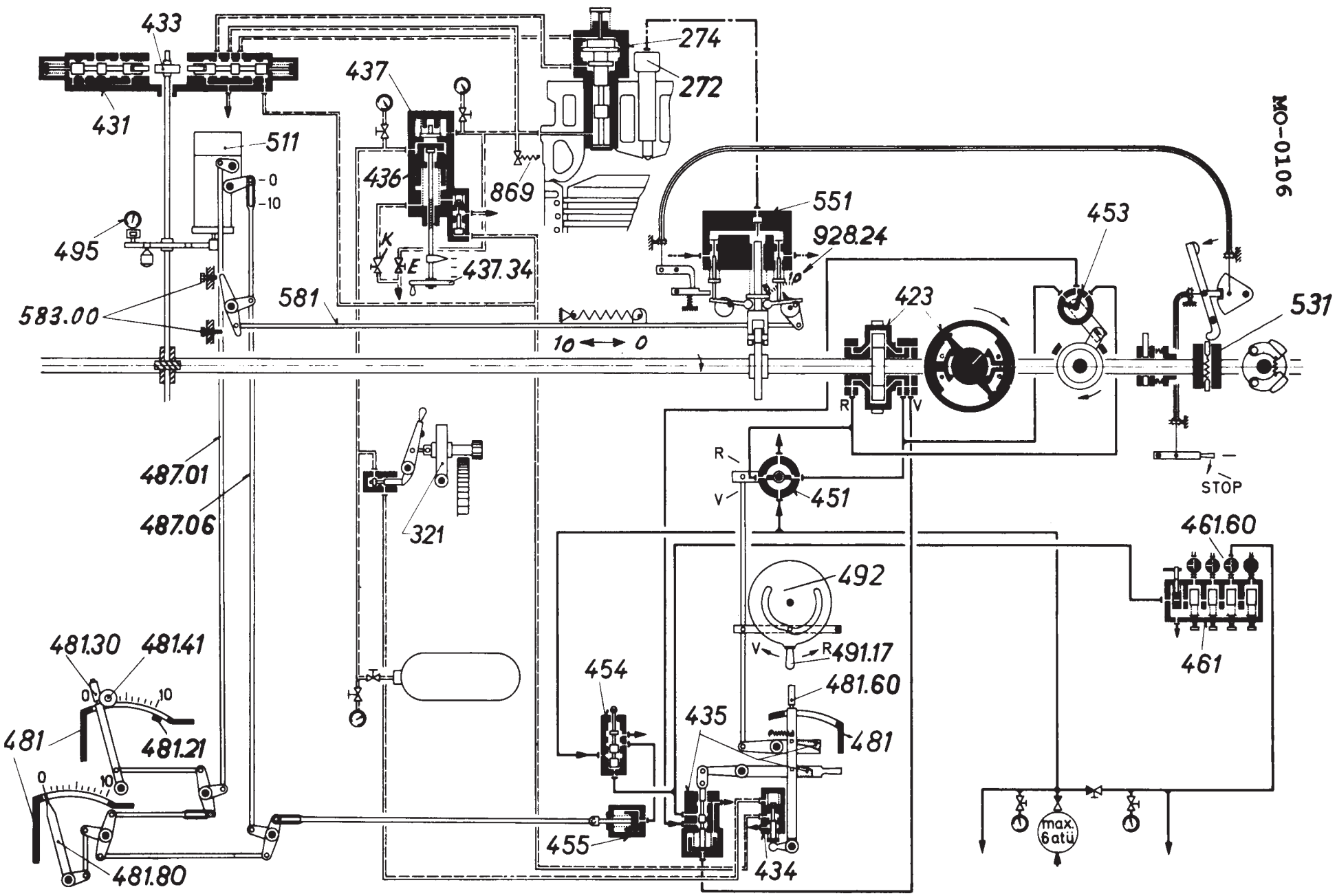
433
431
511
-0
-10
495
583.00
581
437
436
869
K
E
437.34
274
272
551
928.24
10
453
423
531
10 ← → 0
R
V
STOP
487.01
487.06
321
451
461.60
492
491.17
461
481.30
481.41
481
481.21
481.80
454
435
481.60
481
455
434
max. 6atü
MO-0106

MO-0107

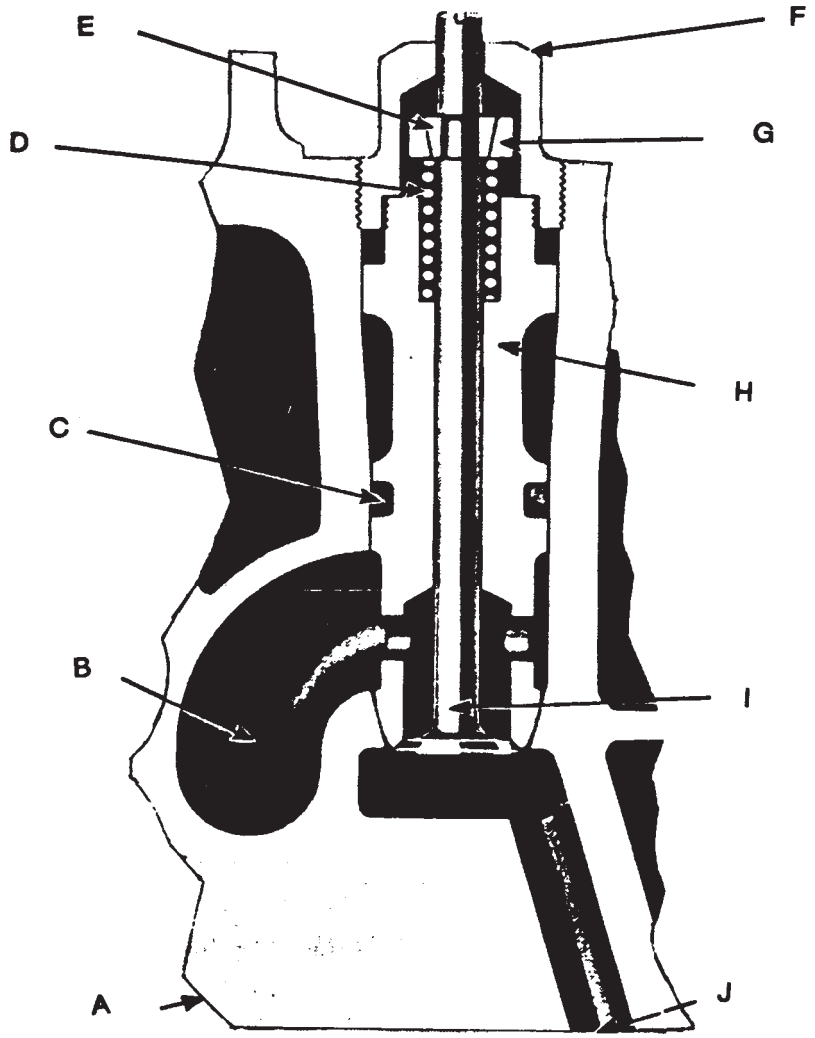
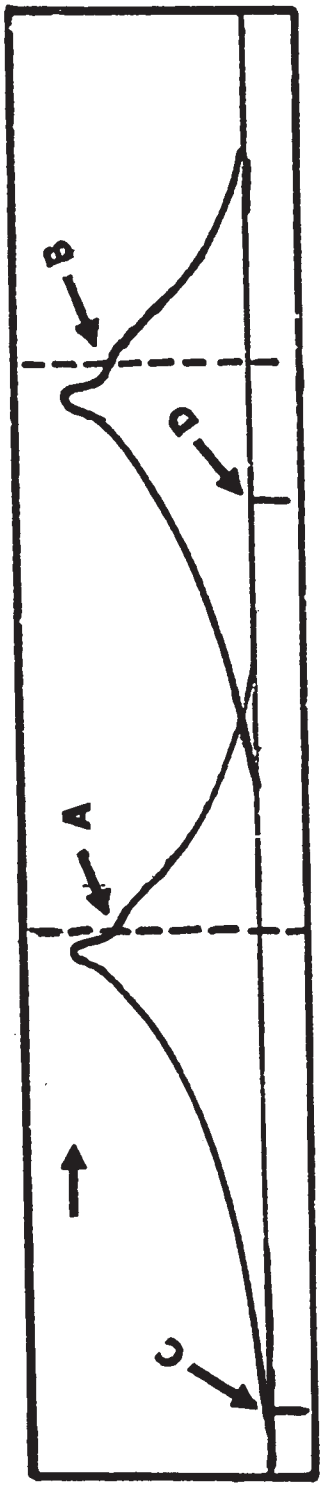
MO-0108