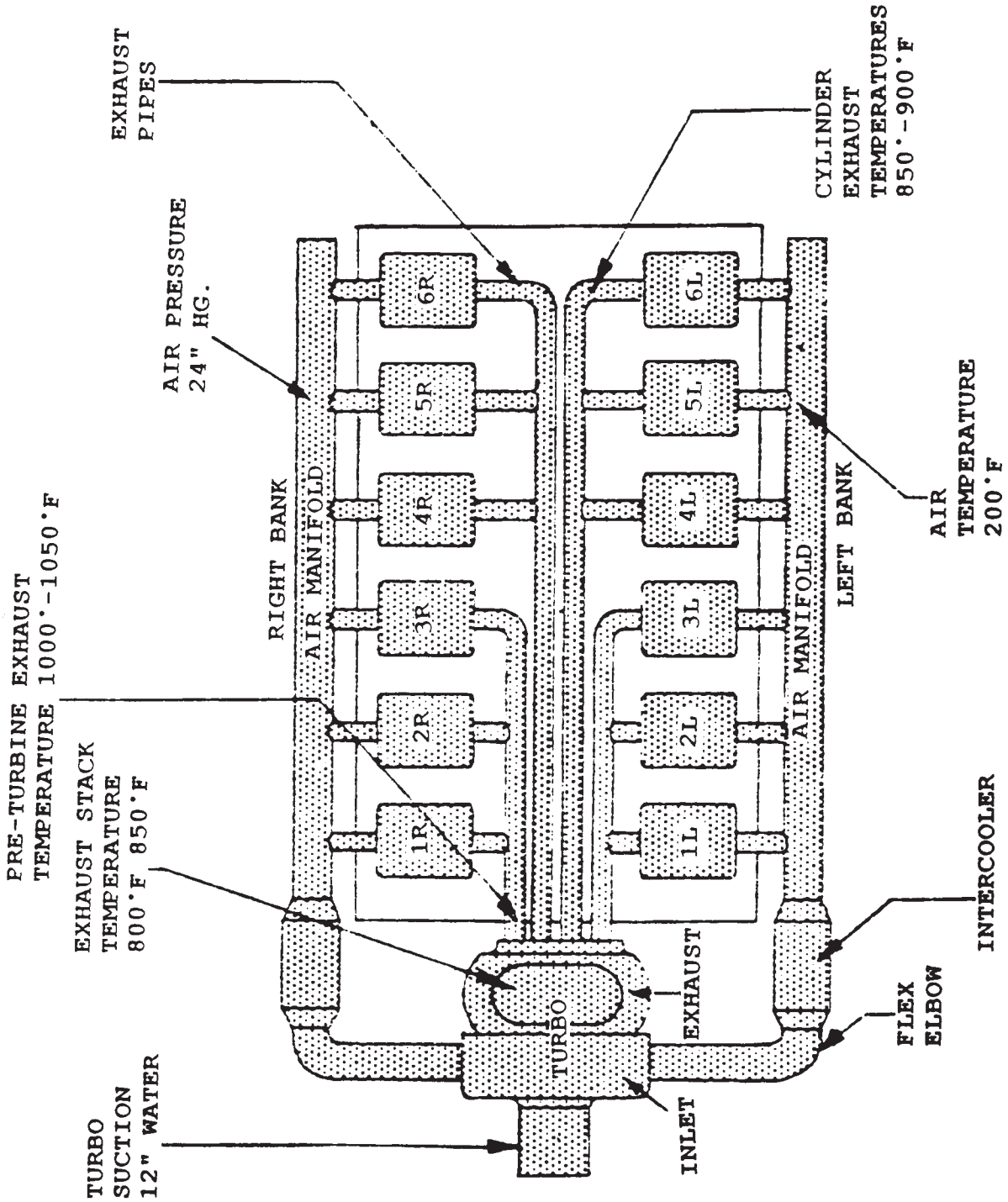
EXHAUST PIPES
AIR PRESSURE 24" HG.
PRE-TURBINE EXHAUST TEMPERATURE 1000'-1050'F
EXHAUST STACK TEMPERATURE 800'F 850'F
TURBO SUCTION 12" WATER
RIGHT BANK
AIR MANIFOLD
1R
2R
3R
4R
5R
6R
TURBO
INLET
EXHAUST
1L
2L
3L
4L
5L
6L
LEFT BANK
AIR MANIFOLD
CYLINDER EXHAUST TEMPERATURES 850'-900'F
AIR TEMPERATURE 200'F
INTERCOOLER
FLEX ELBOW

MO-0077

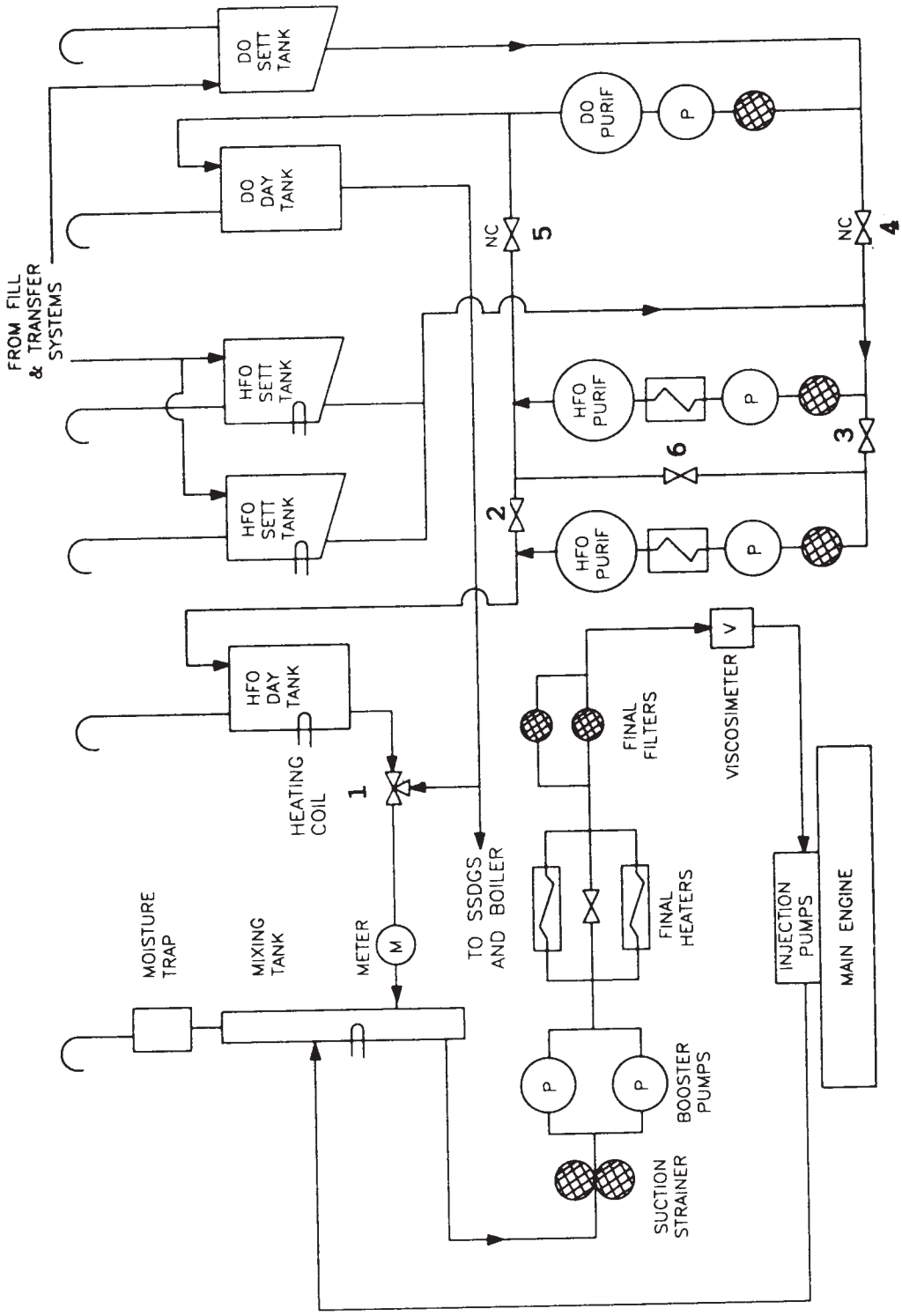
FROM FILL & TRANSFER SYSTEMS
DO SETT TANK
DO DAY TANK
HFO SETT TANK
HFO SETT TANK
HFO DAY TANK
HEATING COIL
1
MOISTURE TRAP
MIXING TANK
METER
M
TO SSDGS AND BOILER
NC
5
2
6
DO PURIF
P
HFO PURIF
P
HFO PURIF
P
NC
4
3
FINAL FILTERS
FINAL HEATERS
V
VISCOSIMETER
INJECTION PUMPS
MAIN ENGINE
P
P
BOOSTER PUMPS
SUCTION STRAINER

MO-0078

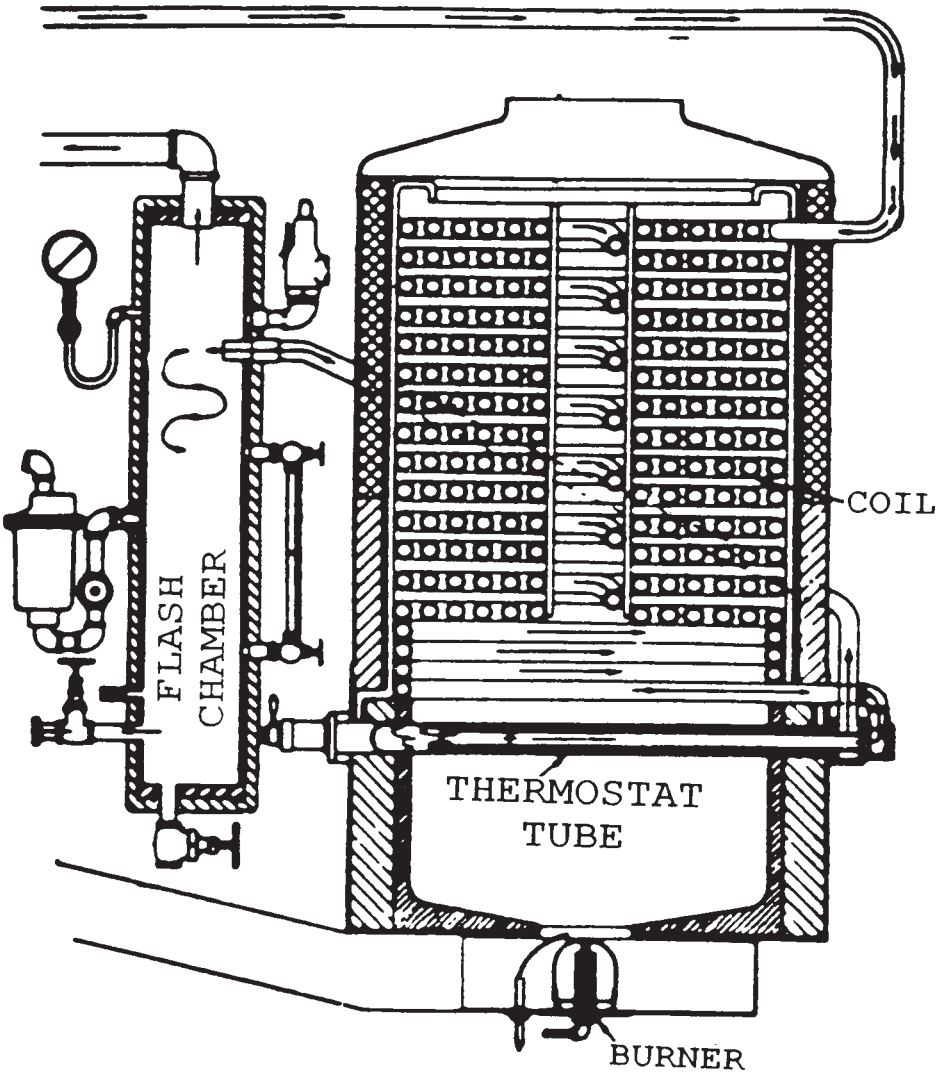

MO-0079

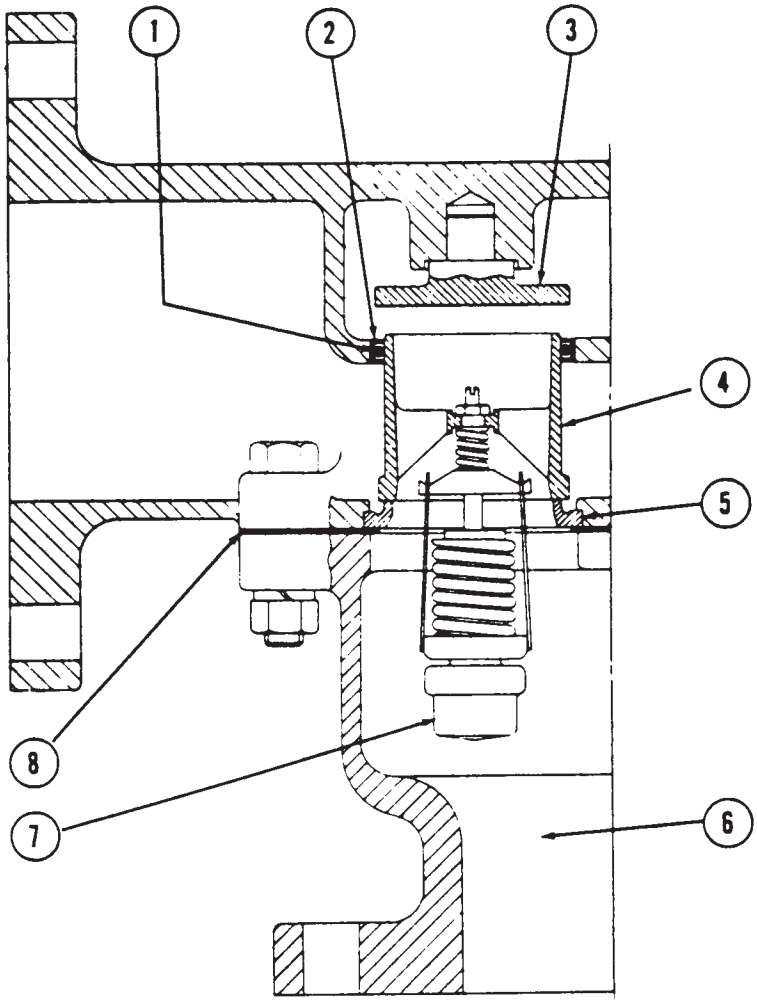

MO-0080

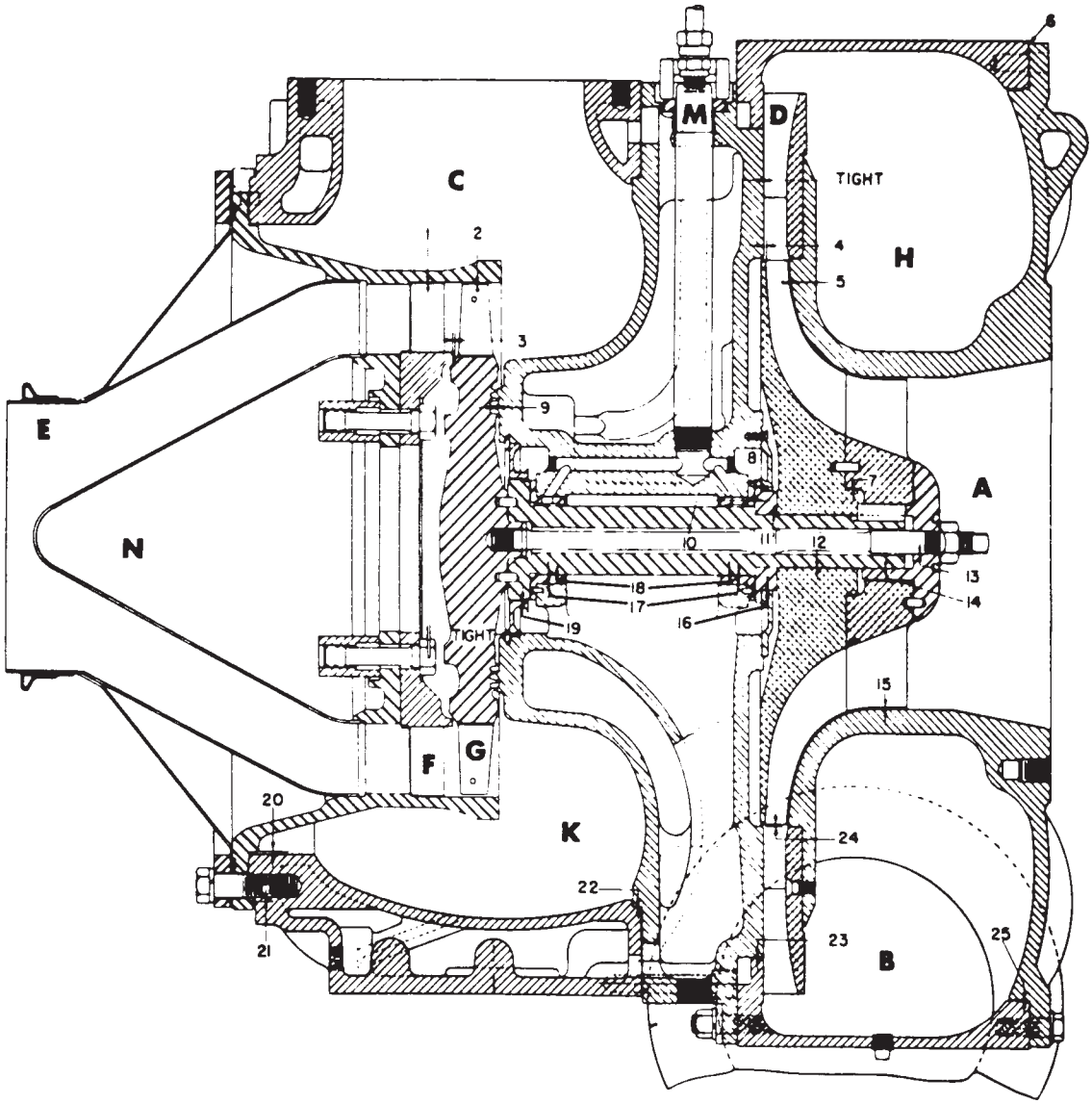
C
M
D
TIGHT
H
A
E
N
F
G
K
B
TIGHT
1
2
3
4
5
6
7
8
9
10
11
12
13
14
15
16
17
18
19
20
21
22
23
24
25

MO-0081

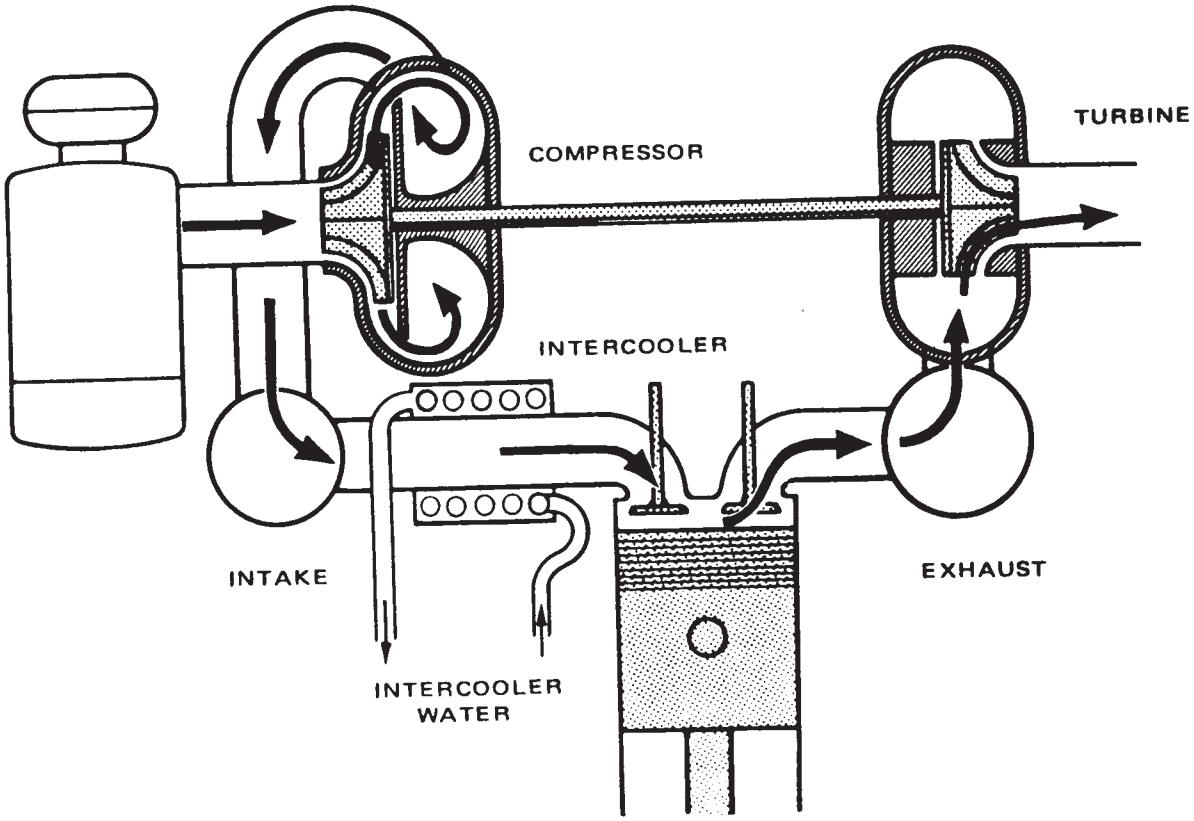

MO-0082

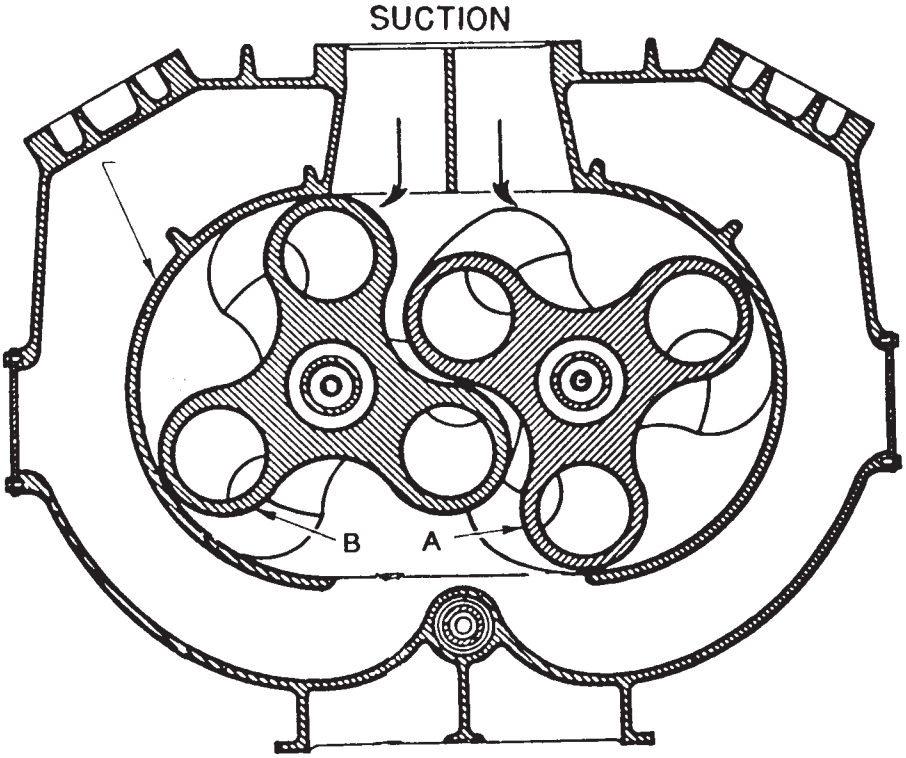

MO-0083

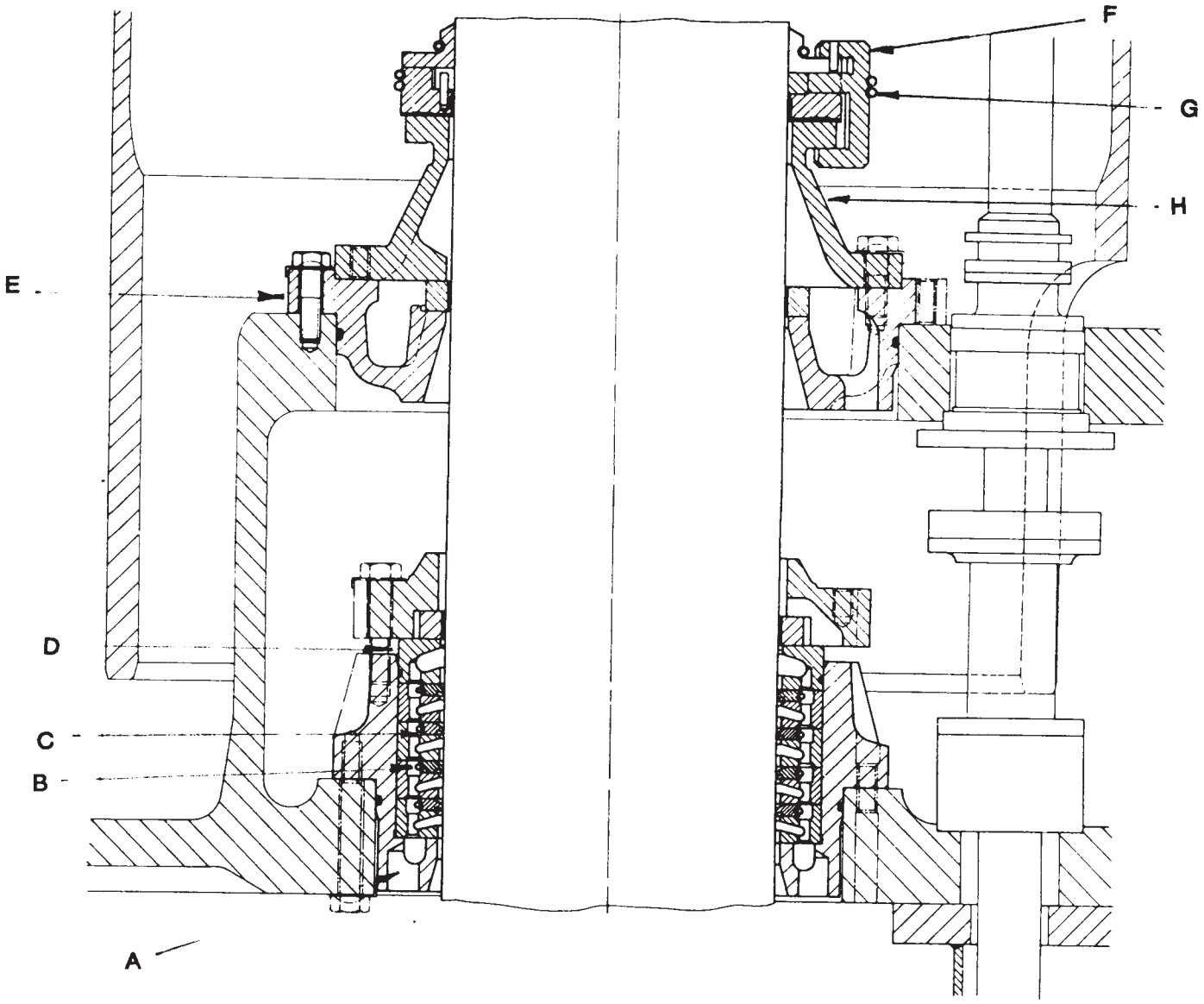

MO-0084

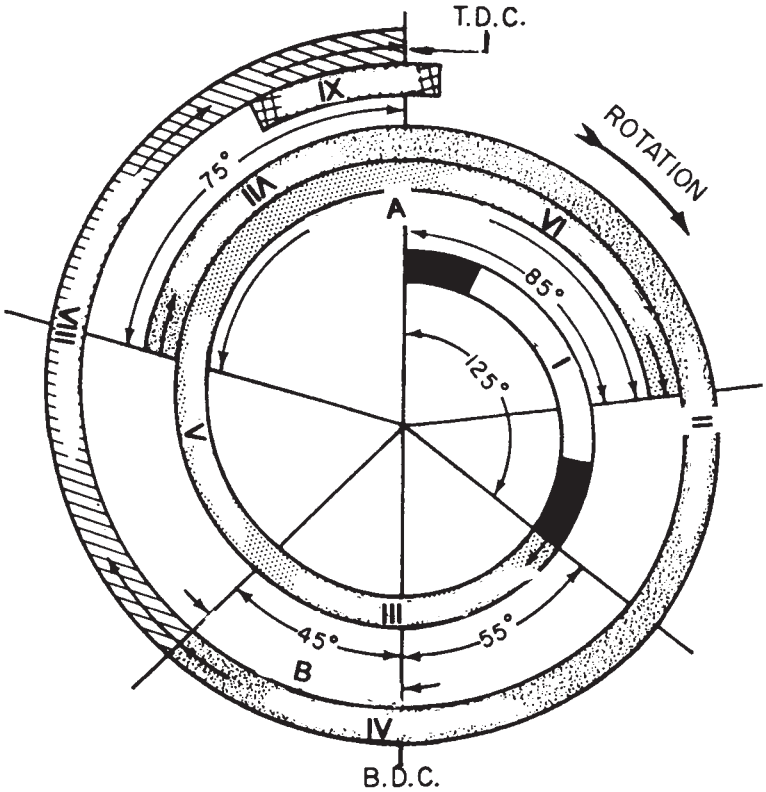

MO-0085

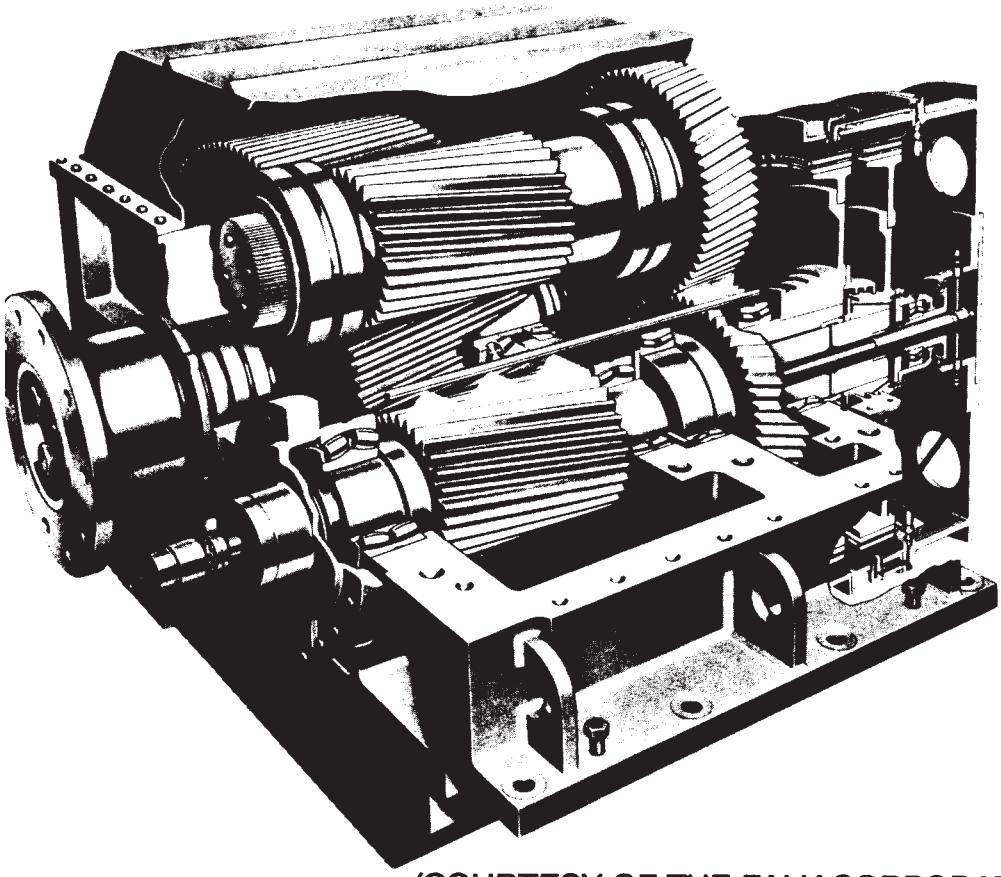

(COURTESY OF THE FALK CORPORATION)

MO-0086

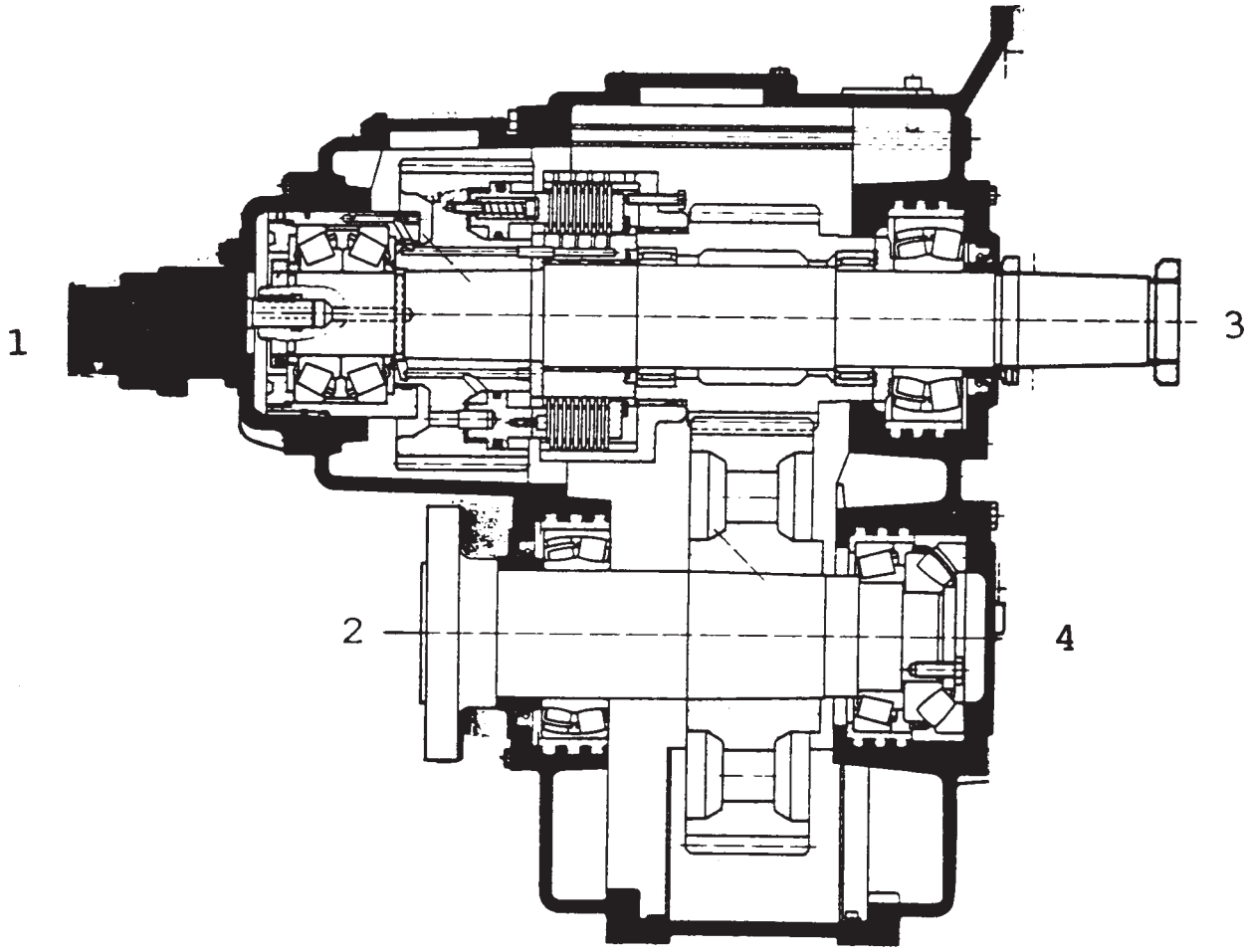

MO-0087

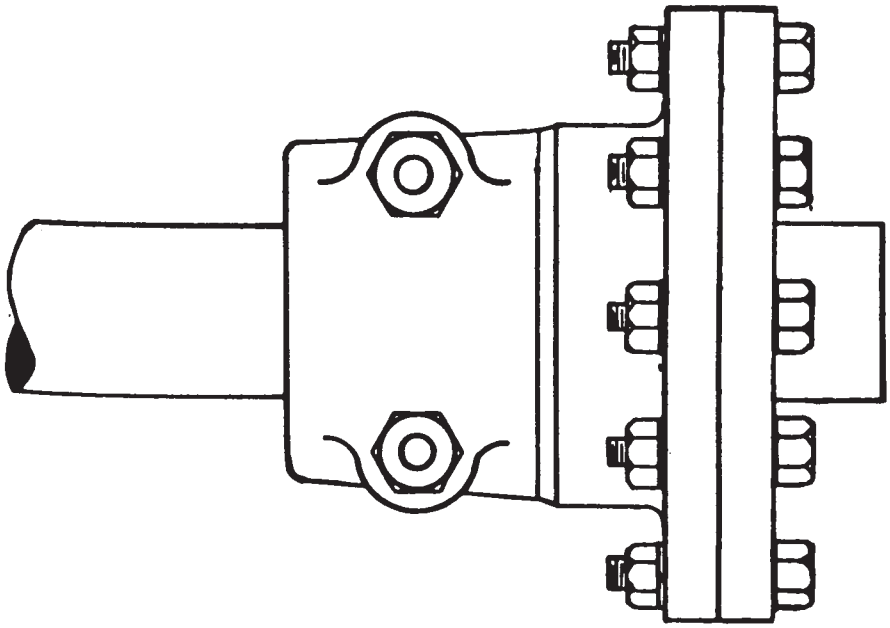

MO-0088

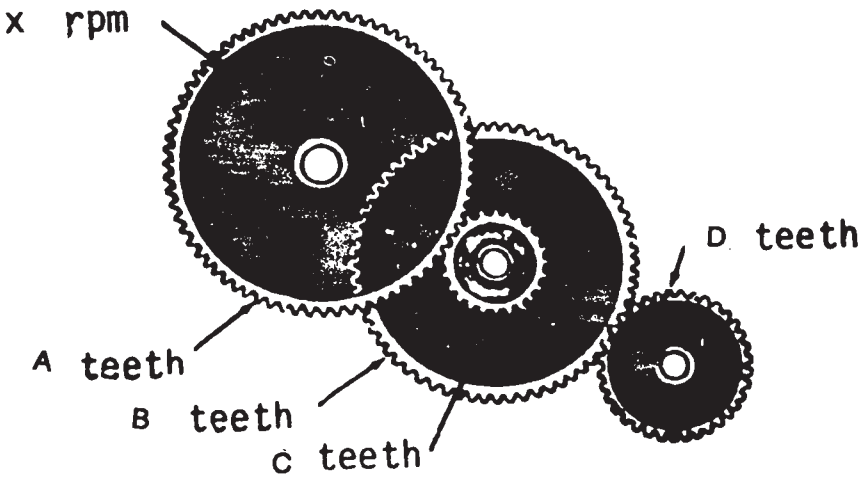

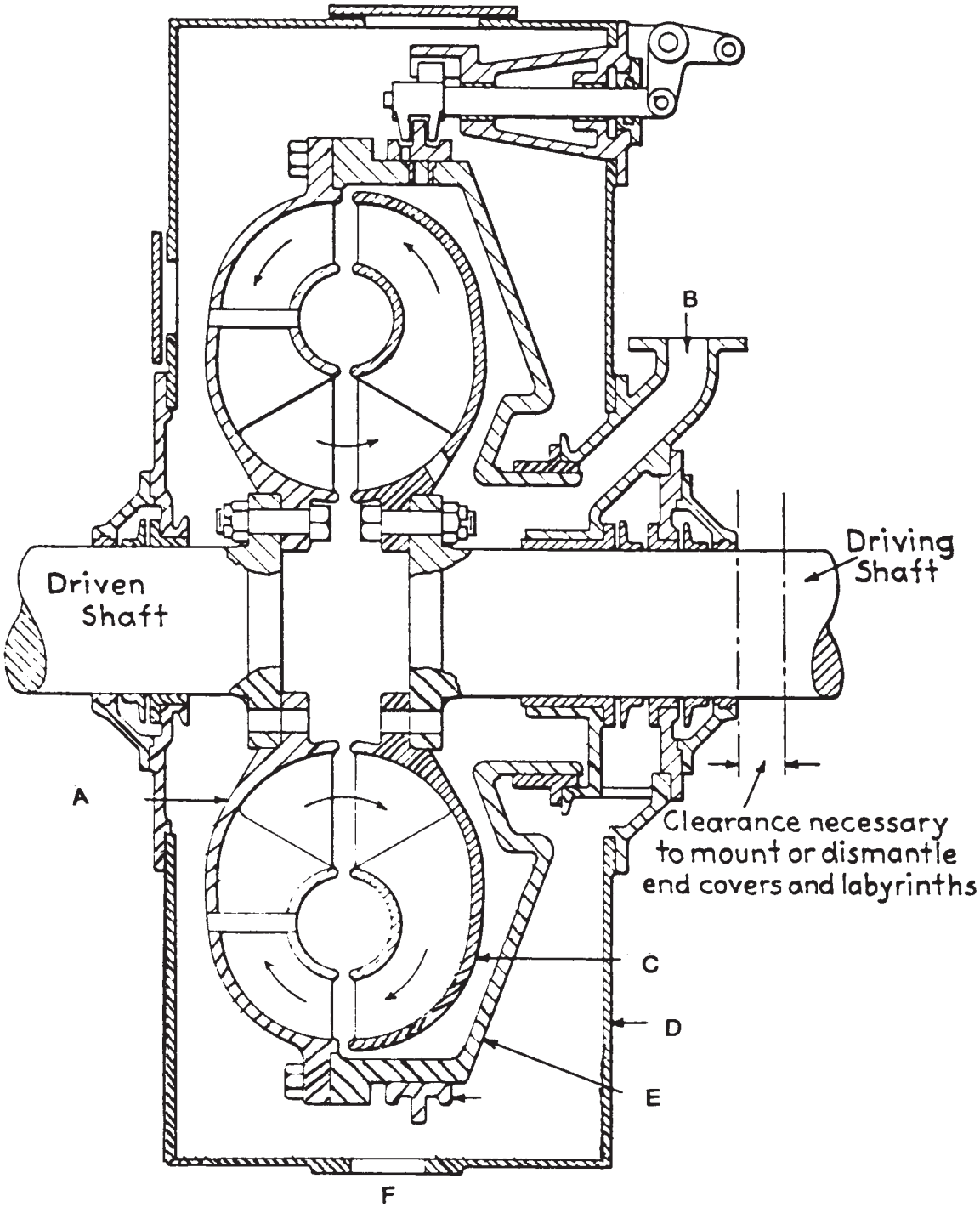
B
Driving Shaft
Driven Shaft
A
Clearance necessary to mount or dismantle end covers and labyrinths
C
D
E
F

MO-0090

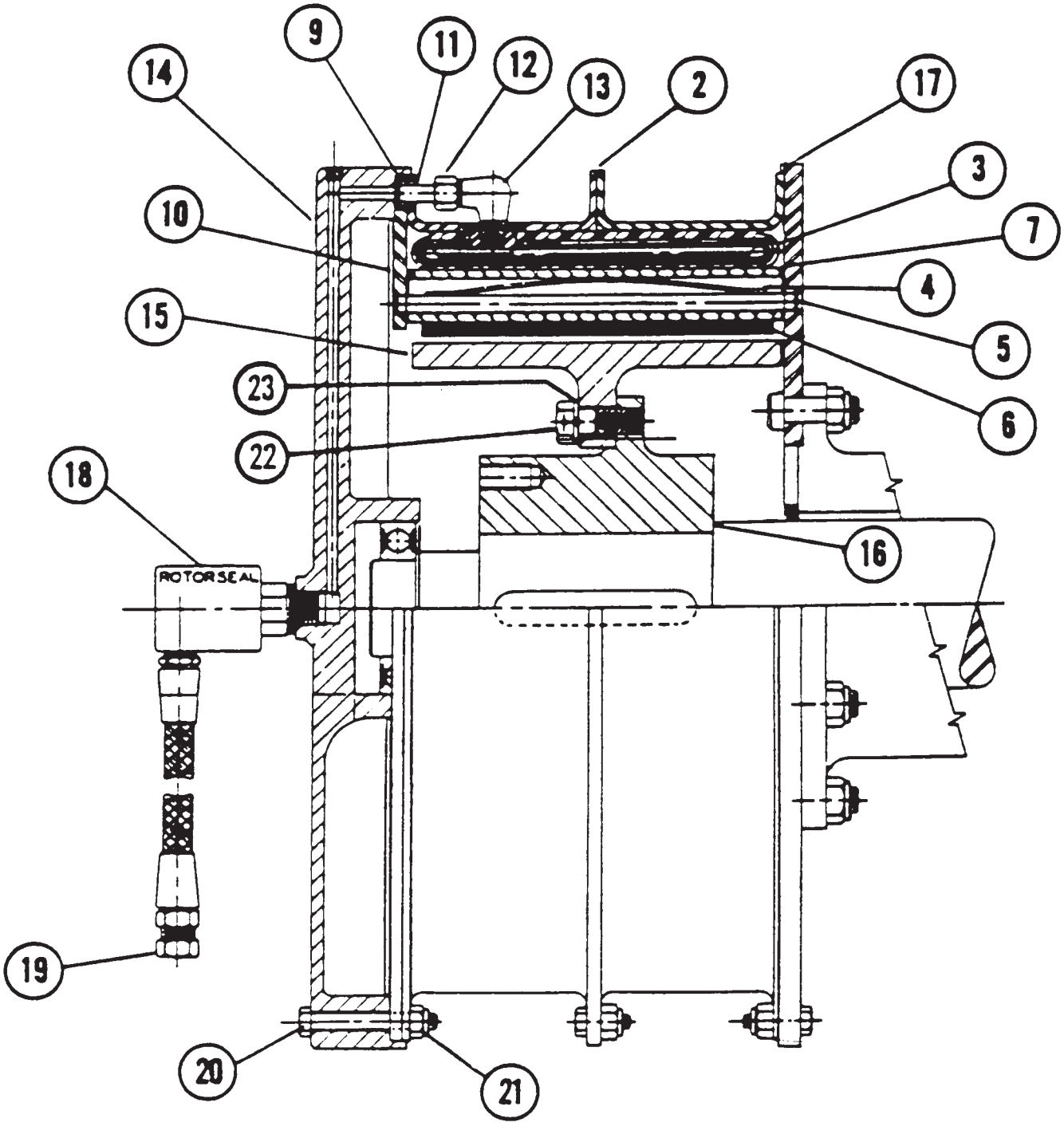

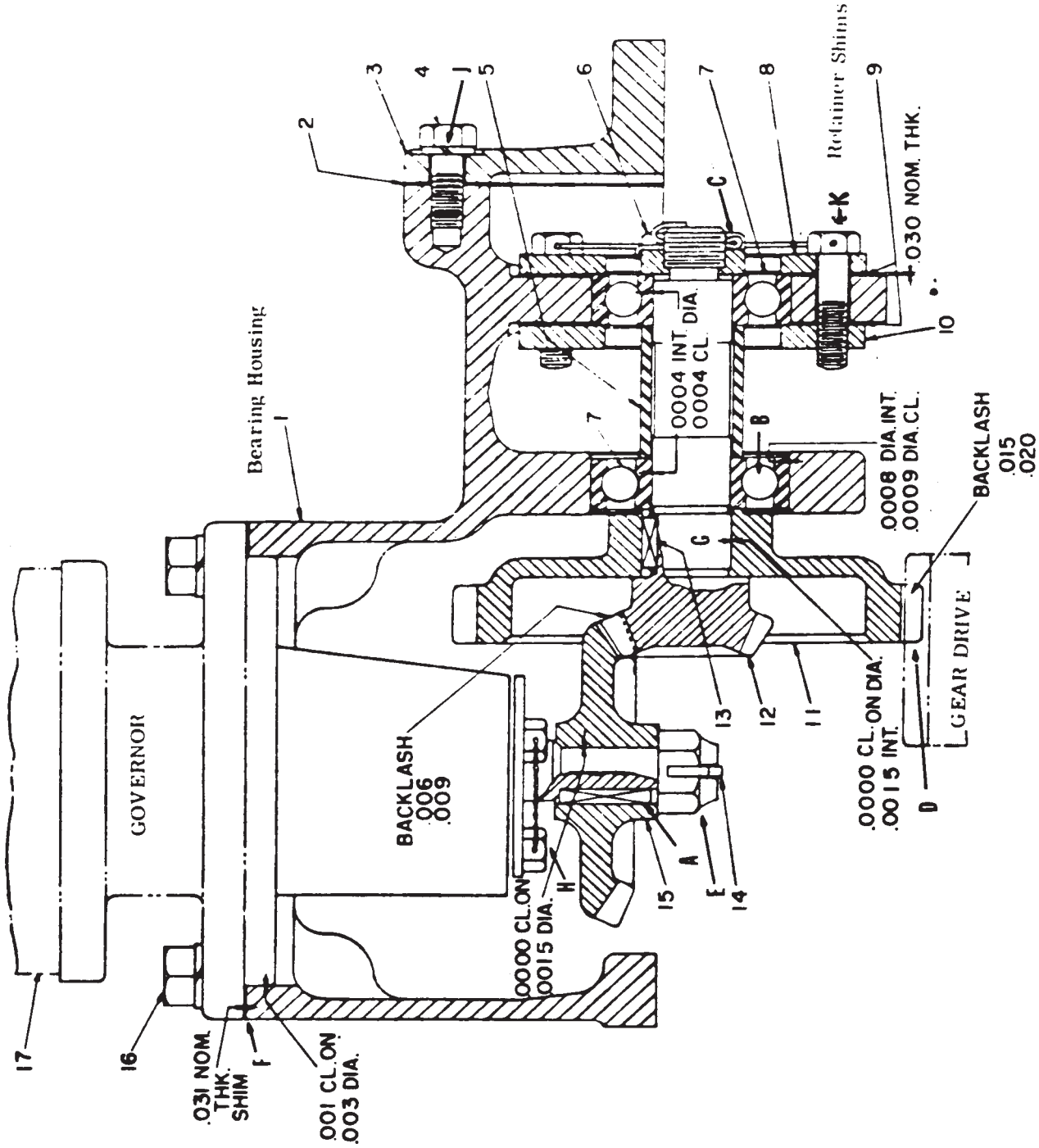
Bearing Housing
Retainer Shims
.030 NOM. THK.
.0004 INT. DIA.
.0004 CL.
.0008 DIA. INT.
.0009 DIA. CL.
BACKLASH
.015
.020
GEAR DRIVE
.0000 CL. ON DIA.
.0015 INT.
GOVERNOR
BACKLASH
.006
.009
.0000 CL. ON
.0015 DIA.
.031 NOM.
THK.
SHIM
.001 CL. ON
.003 DIA.

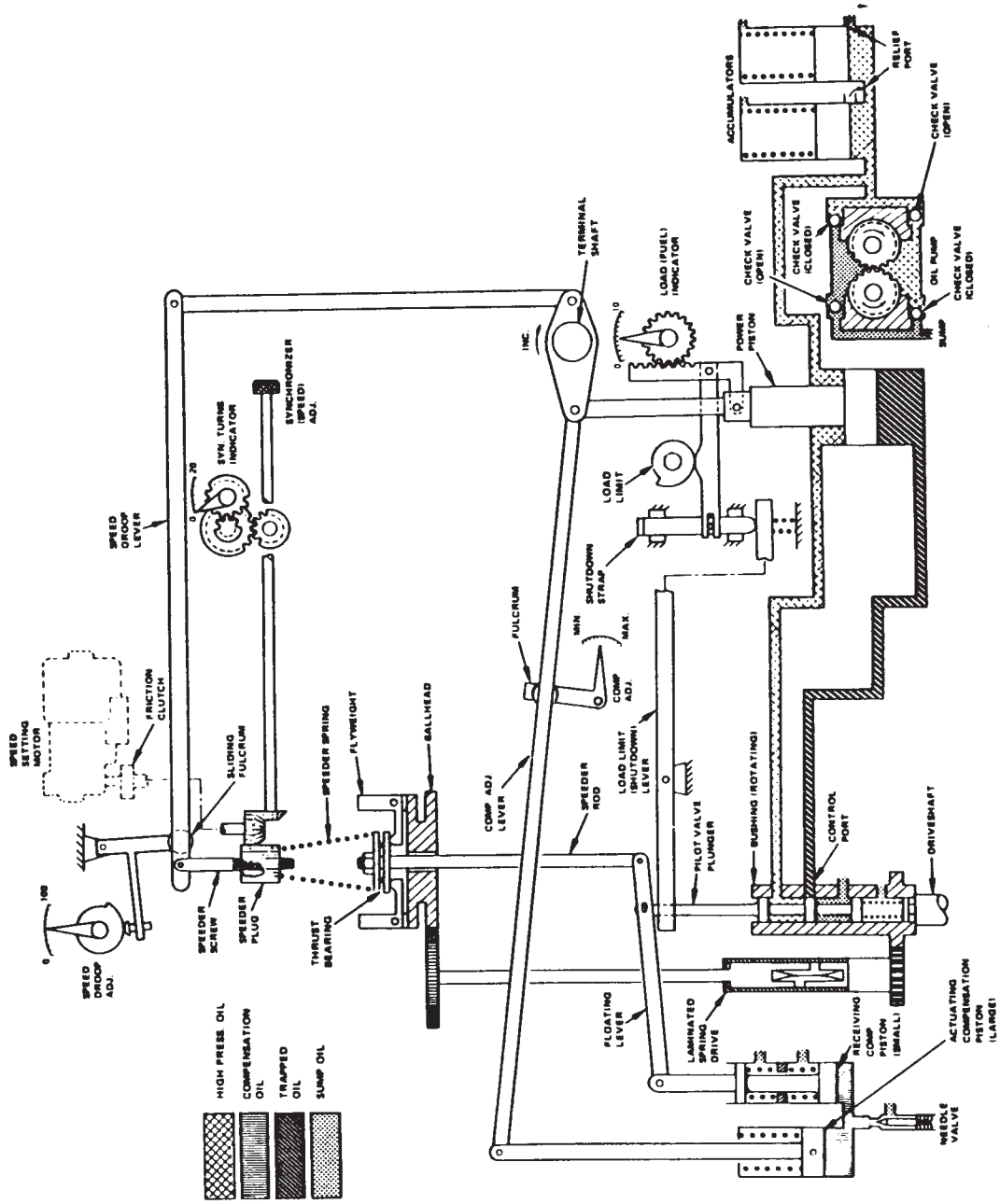

(COURTESY OF WOODWARD GOVERNOR COMPANY)

MO-0093

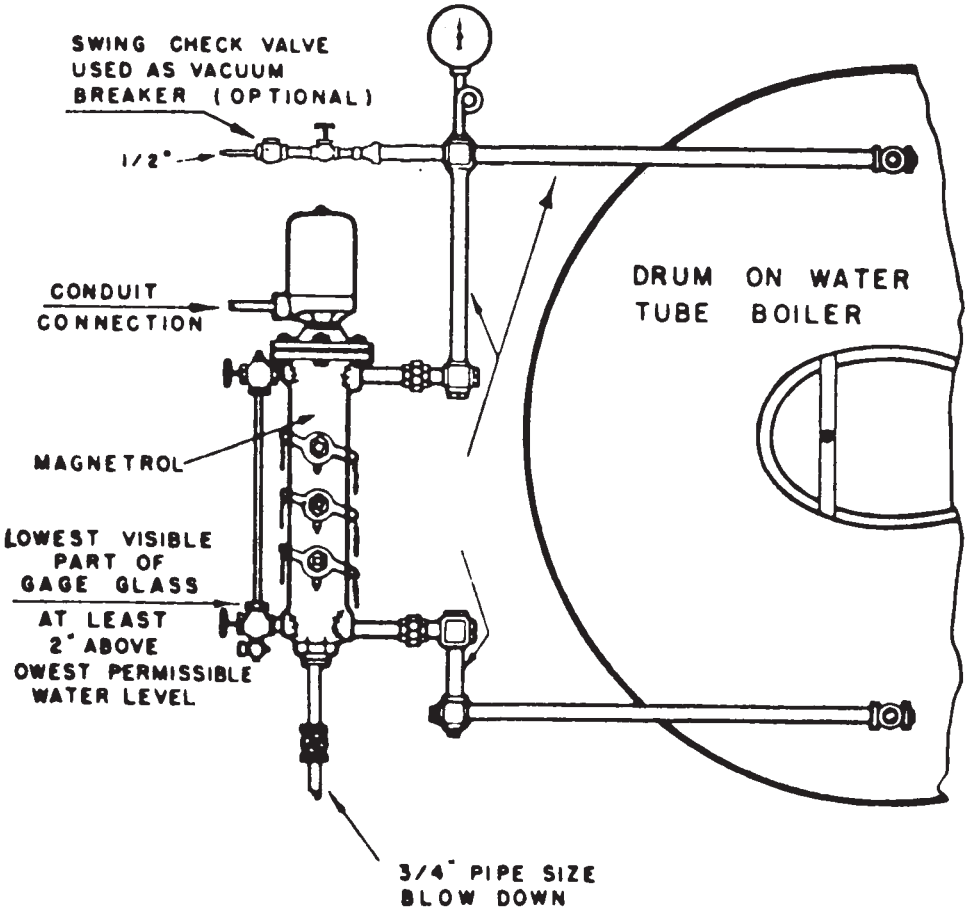
SWING CHECK VALVE
USED AS VACUUM
BREAKER (OPTIONAL)
1/2"
CONDUIT
CONNECTION
MAGNETROL
LOWEST VISIBLE
PART OF
GAGE GLASS
AT LEAST
2" ABOVE
LOWEST PERMISSIBLE
WATER LEVEL
DRUM ON WATER
TUBE BOILER
3/4" PIPE SIZE
BLOW DOWN