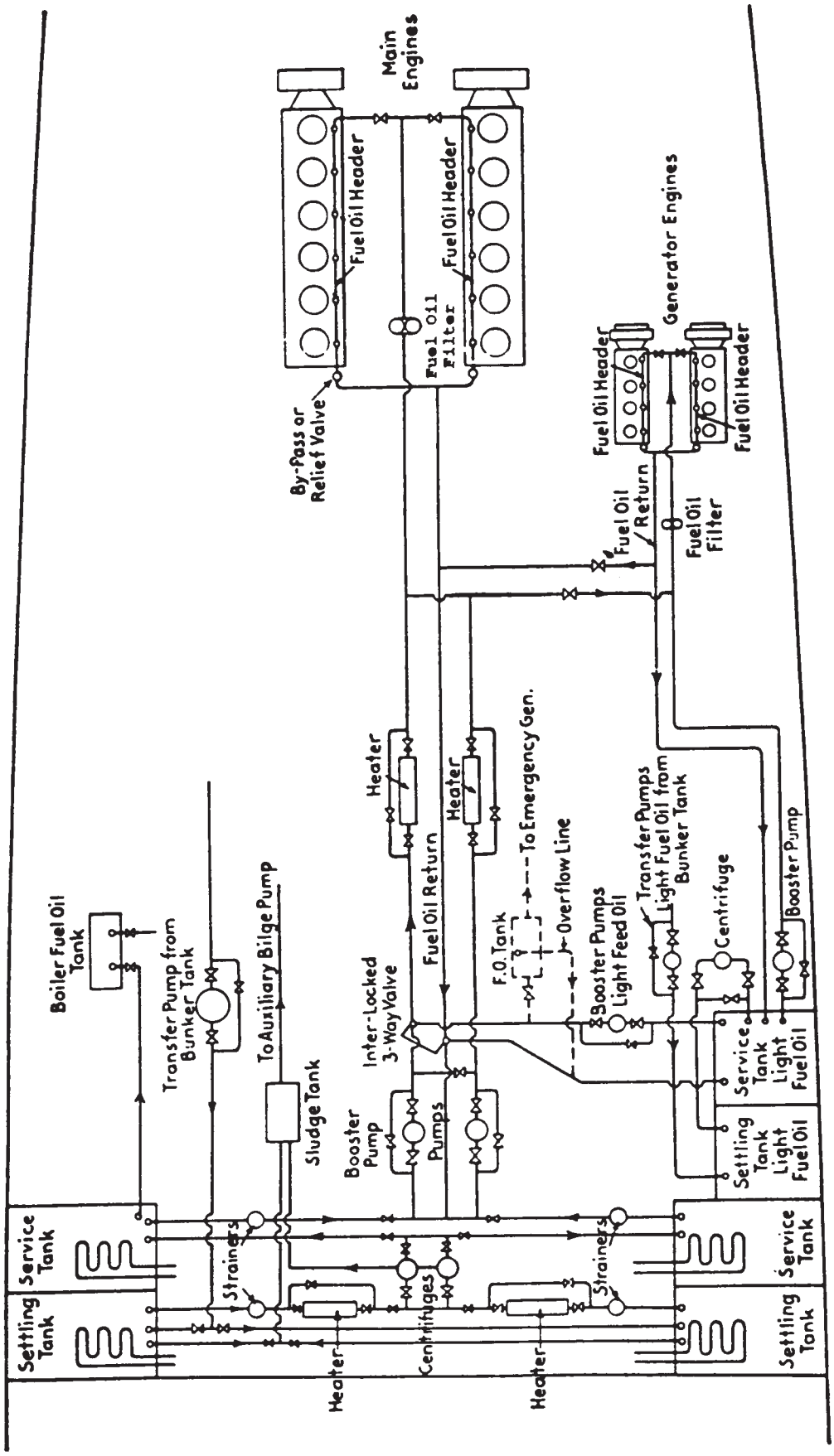
Main Engines
Fuel Oil Header
Fuel Oil Header
Fuel Oil Filter
By-Pass or Relief Valve
Generator Engines
Fuel Oil Header
Fuel Oil Header
Fuel Oil Return
Fuel Oil Filter
Heater
Heater
To Emergency Gen.
Overflow Line
Transfer Pumps
Light Fuel Oil from Bunker Tank
Centrifuge
Booster Pump
Boiler Fuel Oil Tank
Transfer Pump from Bunker Tank
To Auxiliary Bilge Pump
Fuel Oil Return
F.O. Tank
Booster Pumps
Light Feed Oil
Inter-Locked 3-Way Valve
Sludge Tank
Booster Pump
Pumps
Service Tank Light Fuel Oil
Settling Tank Light Fuel Oil
Service Tank
Settling Tank
Strainers
Centrifuges
Strainers
Heater
Heater
Service Tank
Settling Tank

MO-0059

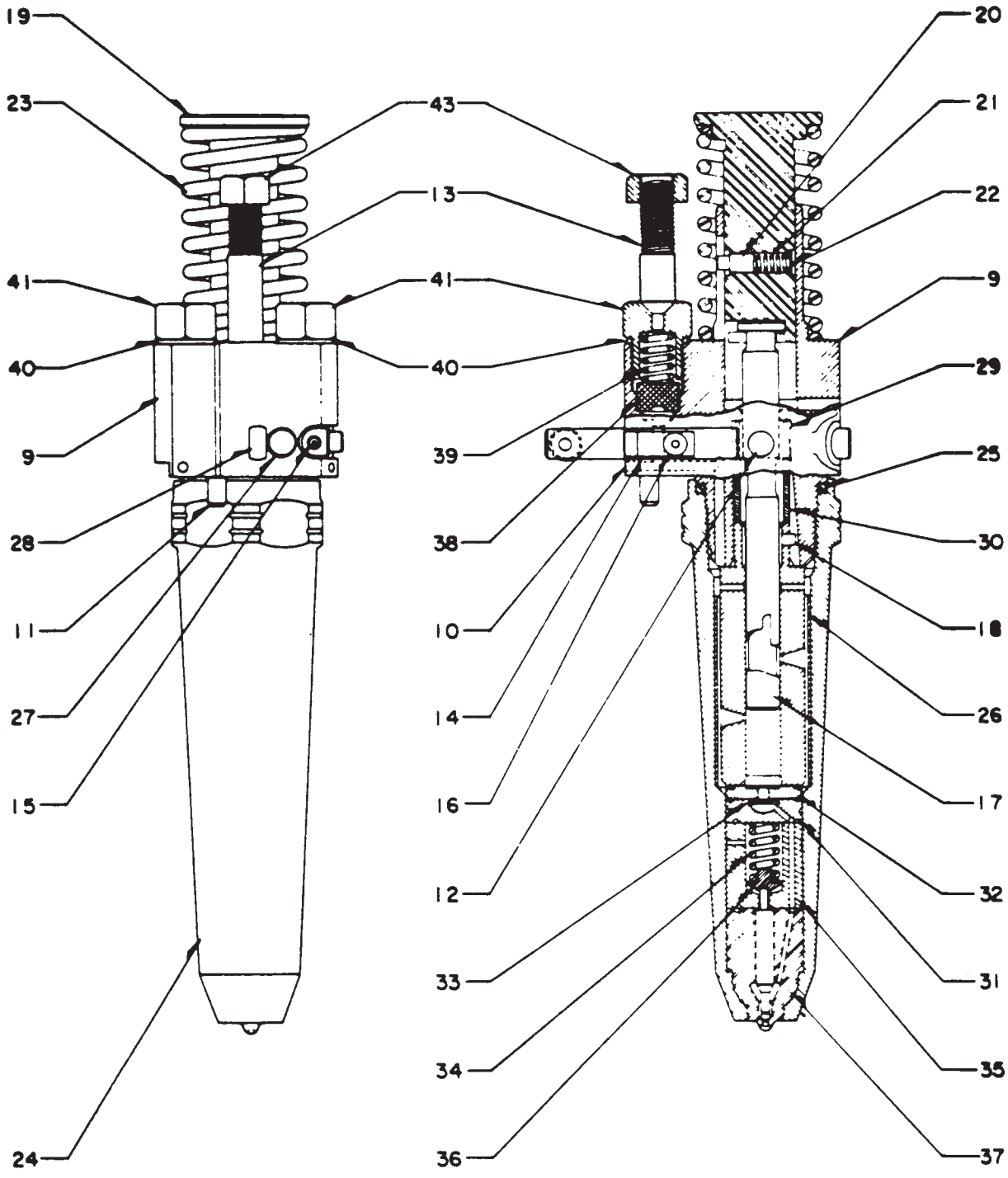
19
23
41
40
9
28
11
27
15
24
43
13
41
40
39
38
10
14
16
12
33
34
36
20
21
22
9
29
25
30
18
26
17
32
31
35
37

MO-0060

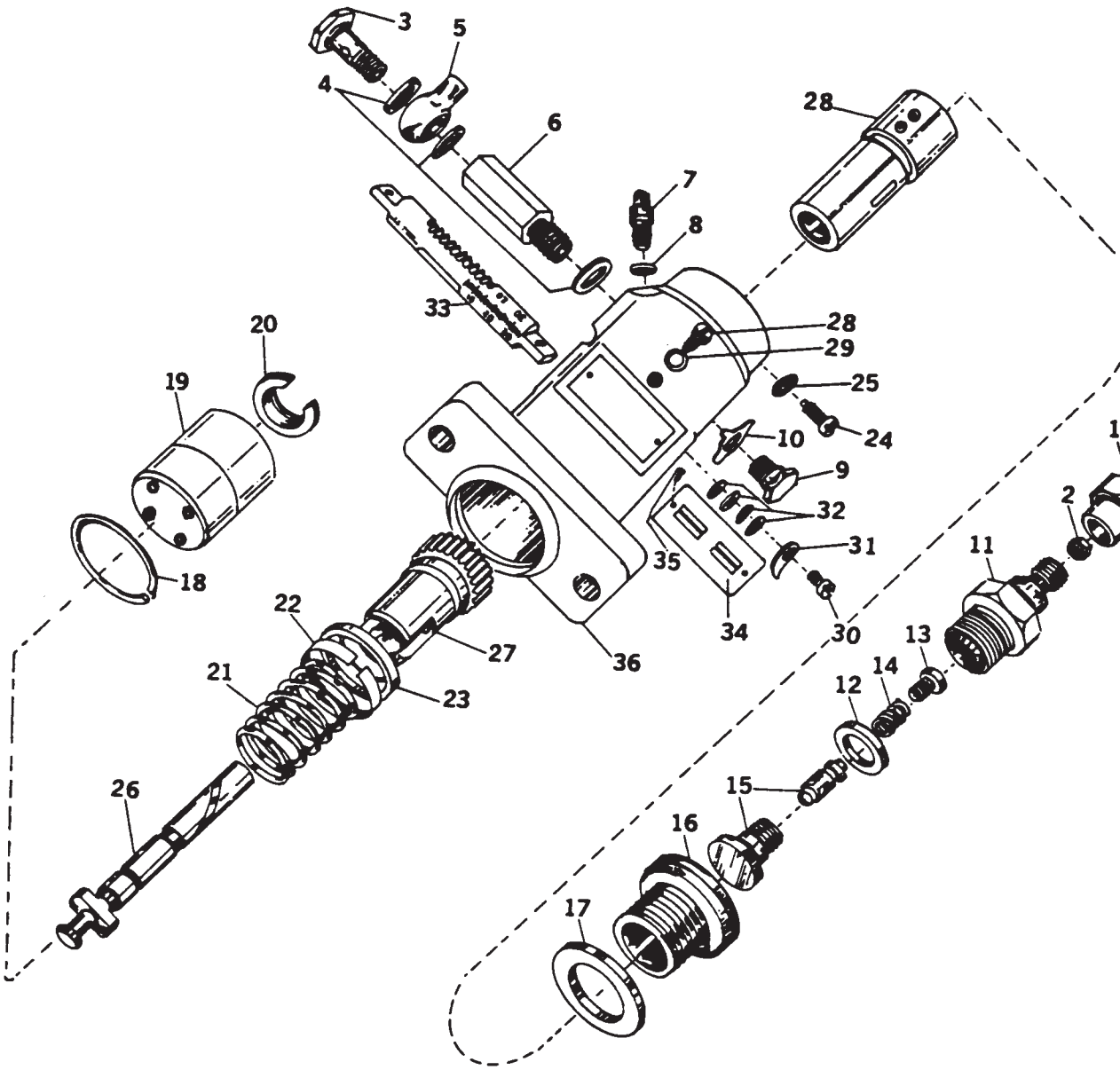
3
5
4
6
28
7
8
33
20
28
29
19
25
24
10
9
32
2
31
11
18
35
22
34
30
13
27
36
14
21
12
23
26
15
16
17

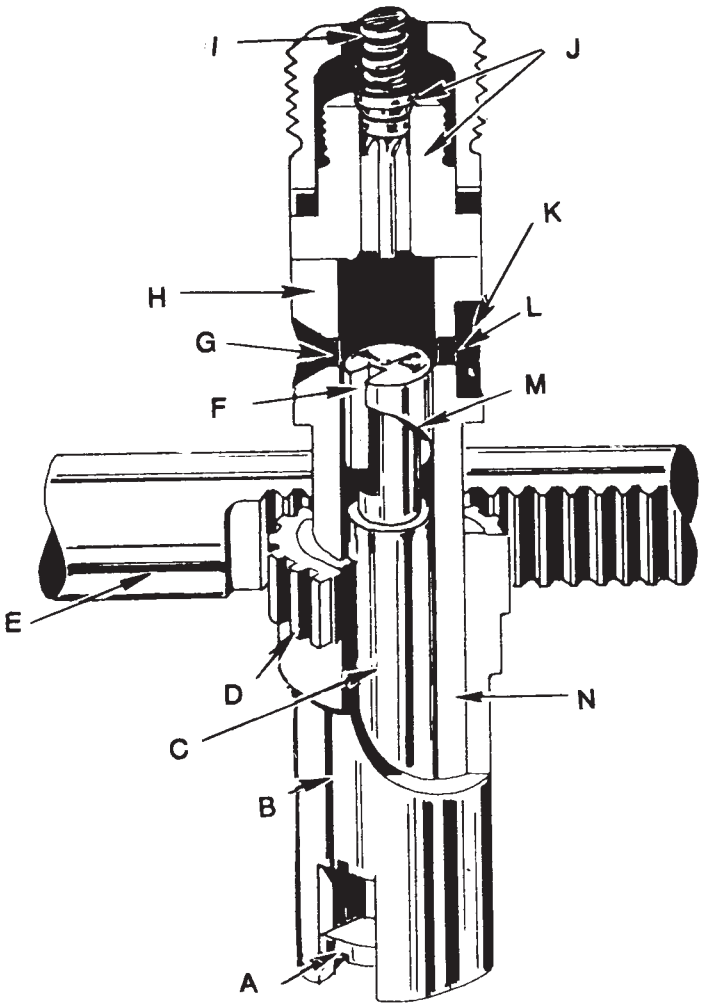
I
J
K
H
L
G
M
F
E
D
N
C
B
A

MO-0062

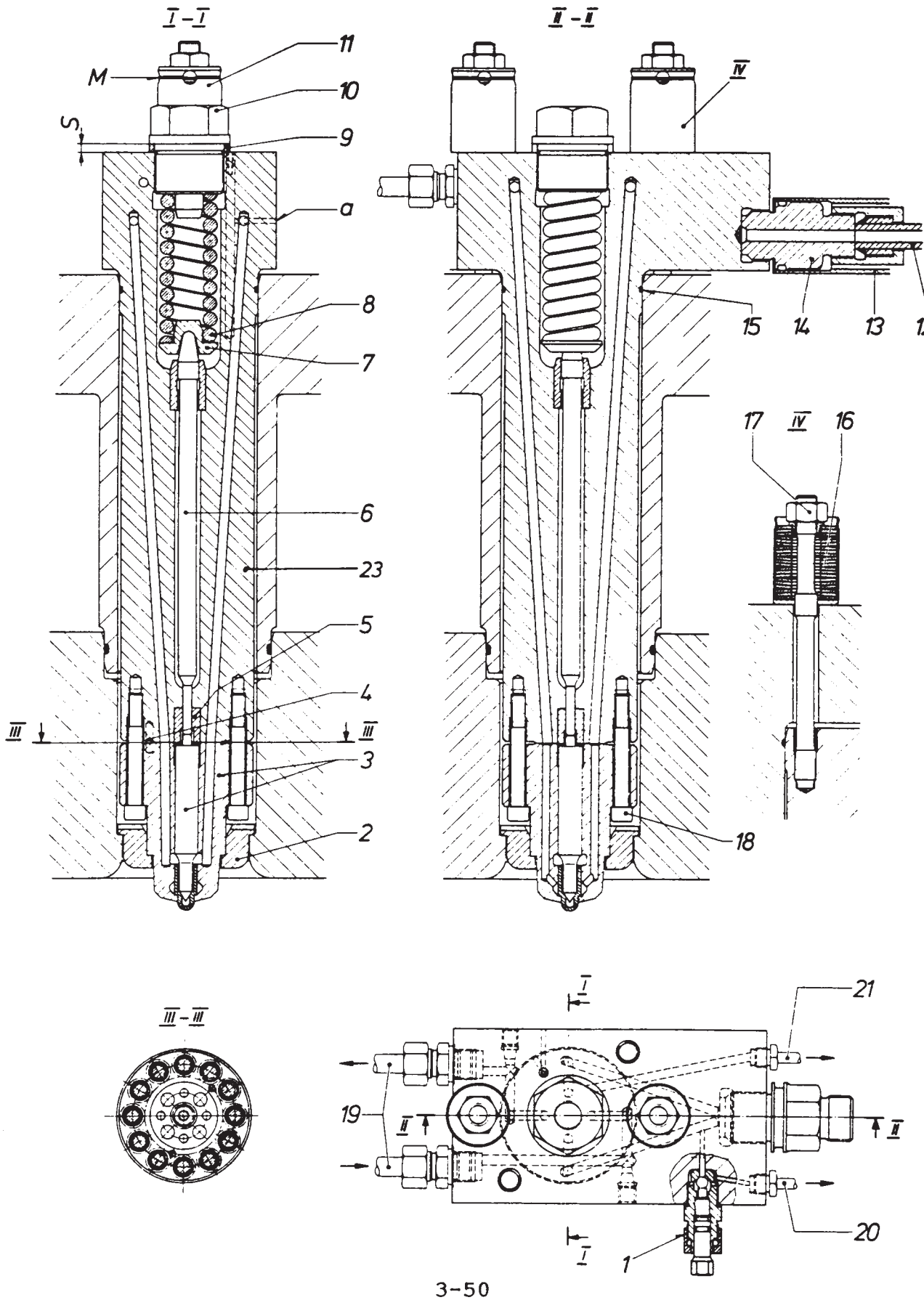
I-I
II-II
III-III
IV
M
S
a
1
2
3
4
5
6
7
8
9
10
11
13
14
15
16
17
18
19
20
21
23

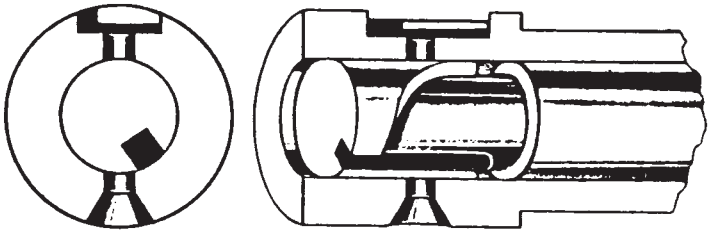

FIG. C

FIG. B

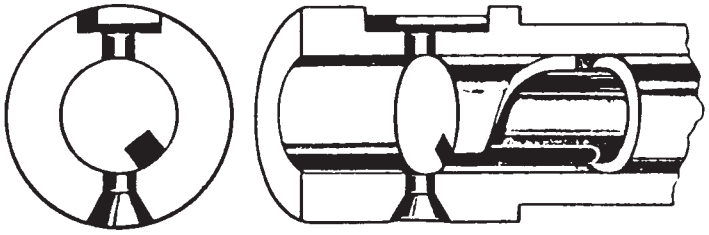

FIG. A

LOW PRESSURE
15 lbs. Steam – 30 lbs. Water

HIGH PRESSURE
150 to 250 lbs. Steam

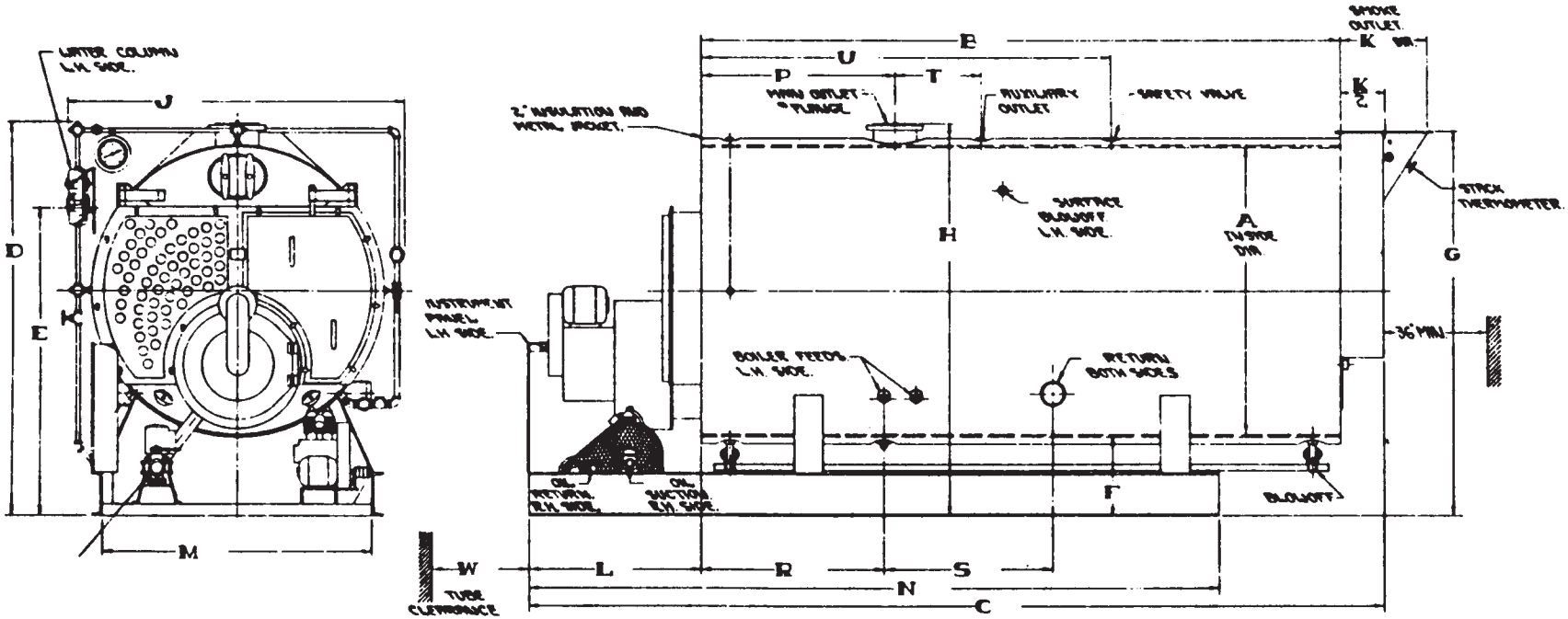

Note: Three transverse saddles, 530 thru 540.

MO-0064

SPECIFICATIONS AND DIMENSION DATA

CATALOG NUMBER OF UNIT		S10	S12	S14	S16	S18	S22	S24	S26	S28	S30	S34	S35	S36	S38	S40
Rating - Horsepower, Max.	H.P.	75	100	125	150	200	250	300	350	400	500	600	750	900	1000	1200
- Steam Per Hour (Feed 212° F)	Lbs.	2585	3450	4310	5180	6900	8600	10350	12100	13800	17250	20700	25875	31050	34500	41400
- Steam Radiation EDR	Sq. Ft.	10465	13950	17440	20925	27900	34875	41850	48825	55800	69750	83700	104625	125550	139500	167400
- Water Radiation EDR	Sq. Ft.	16740	22320	27900	33480	44640	55800	66960	78120	89280	111600	133920	167400	200880	223200	267840
- BTU Per Hour	1000's	2511	3350	4185	5025	6695	8370	10044	11718	13392	16740	20088	25110	30132	33480	40176

MO-0065

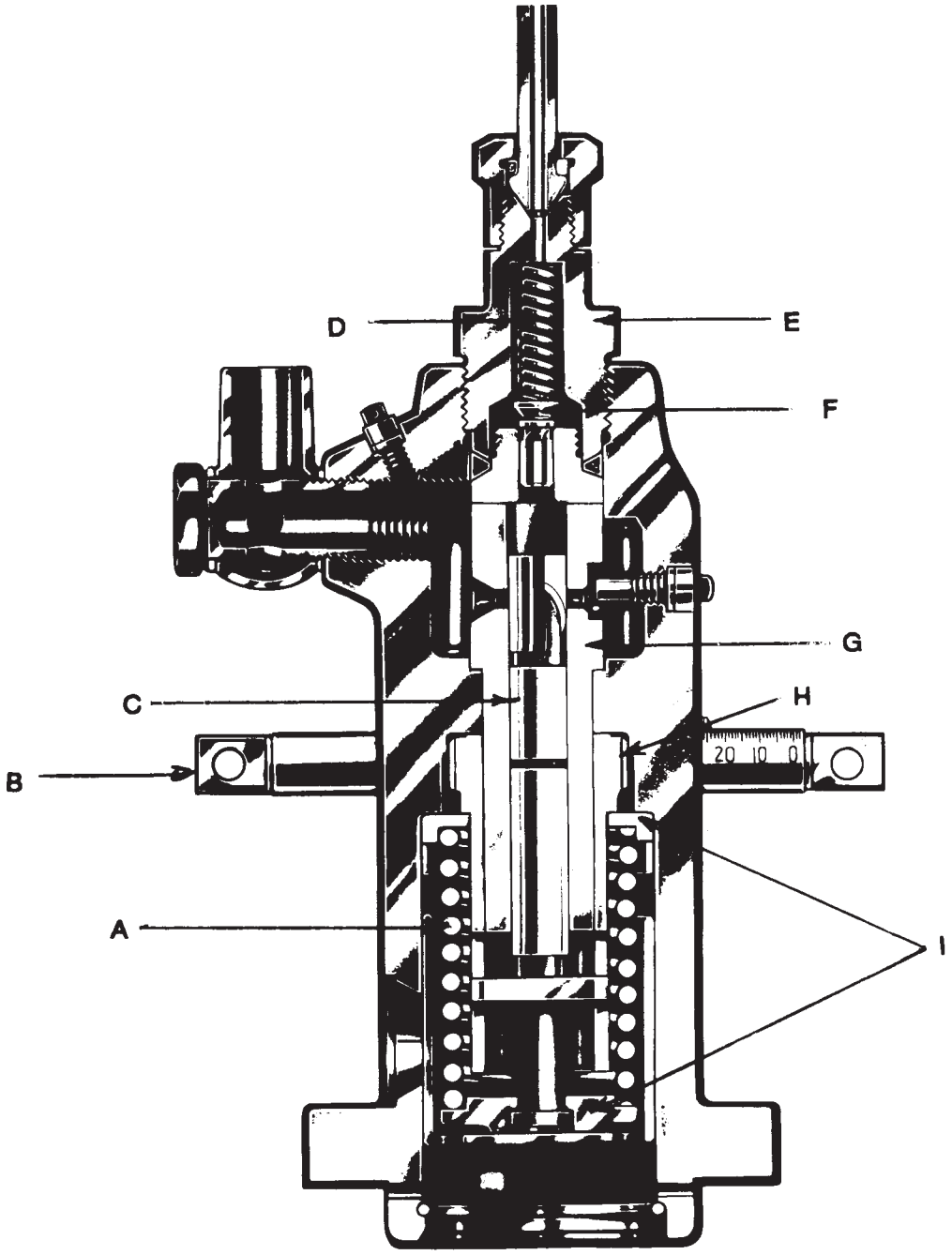

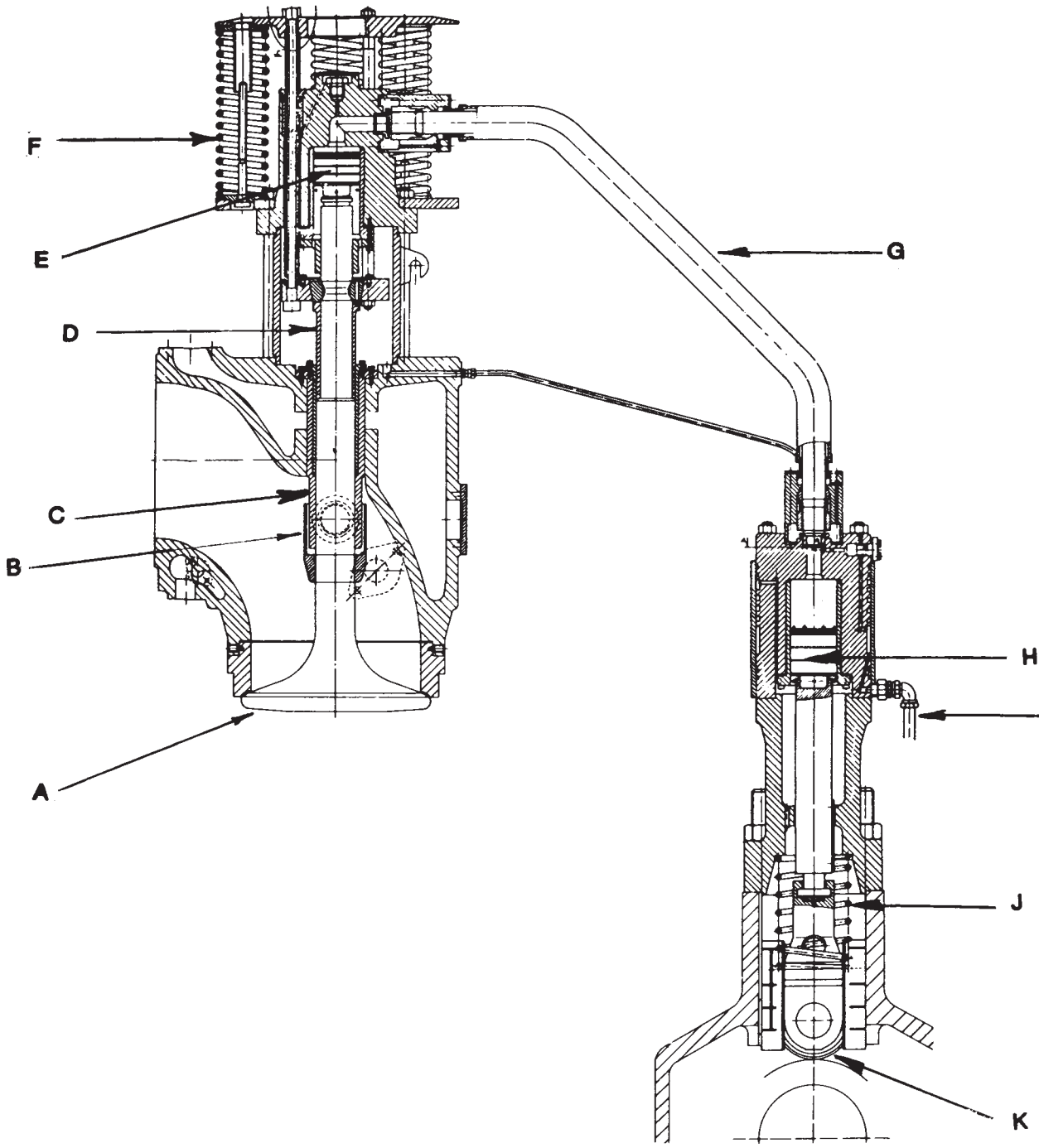
F
E
D
C
B
A
G
H
J
K

MO-0067

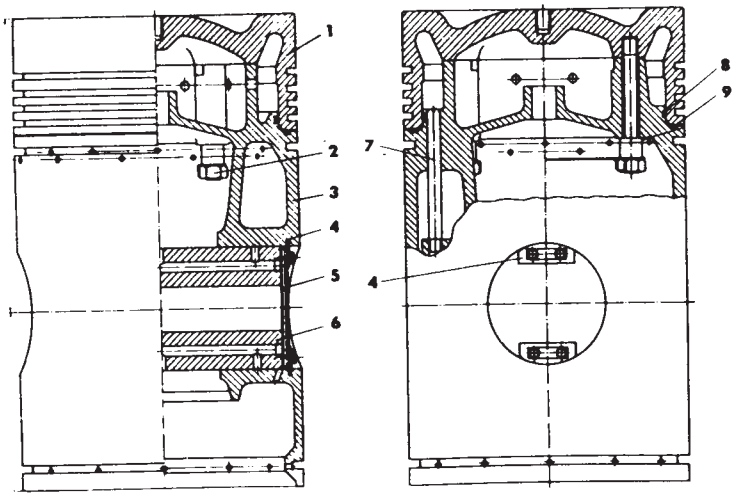

MO-0068

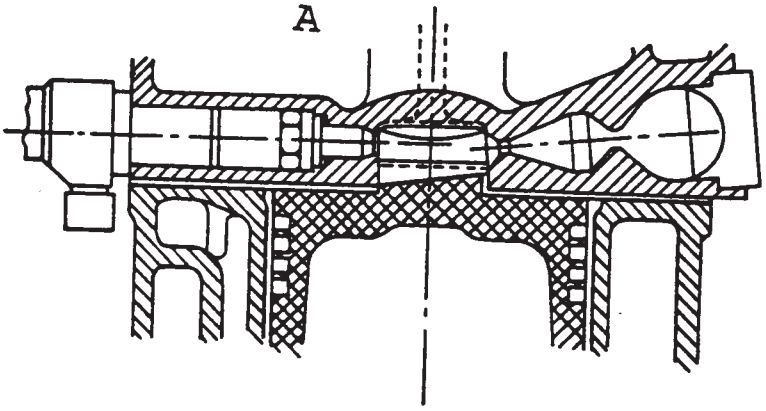

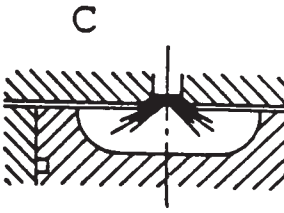

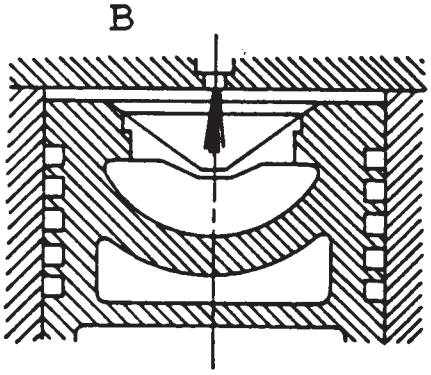

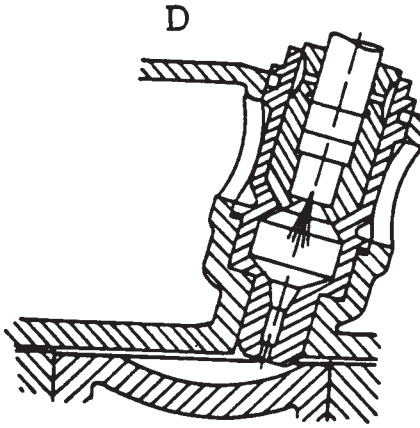

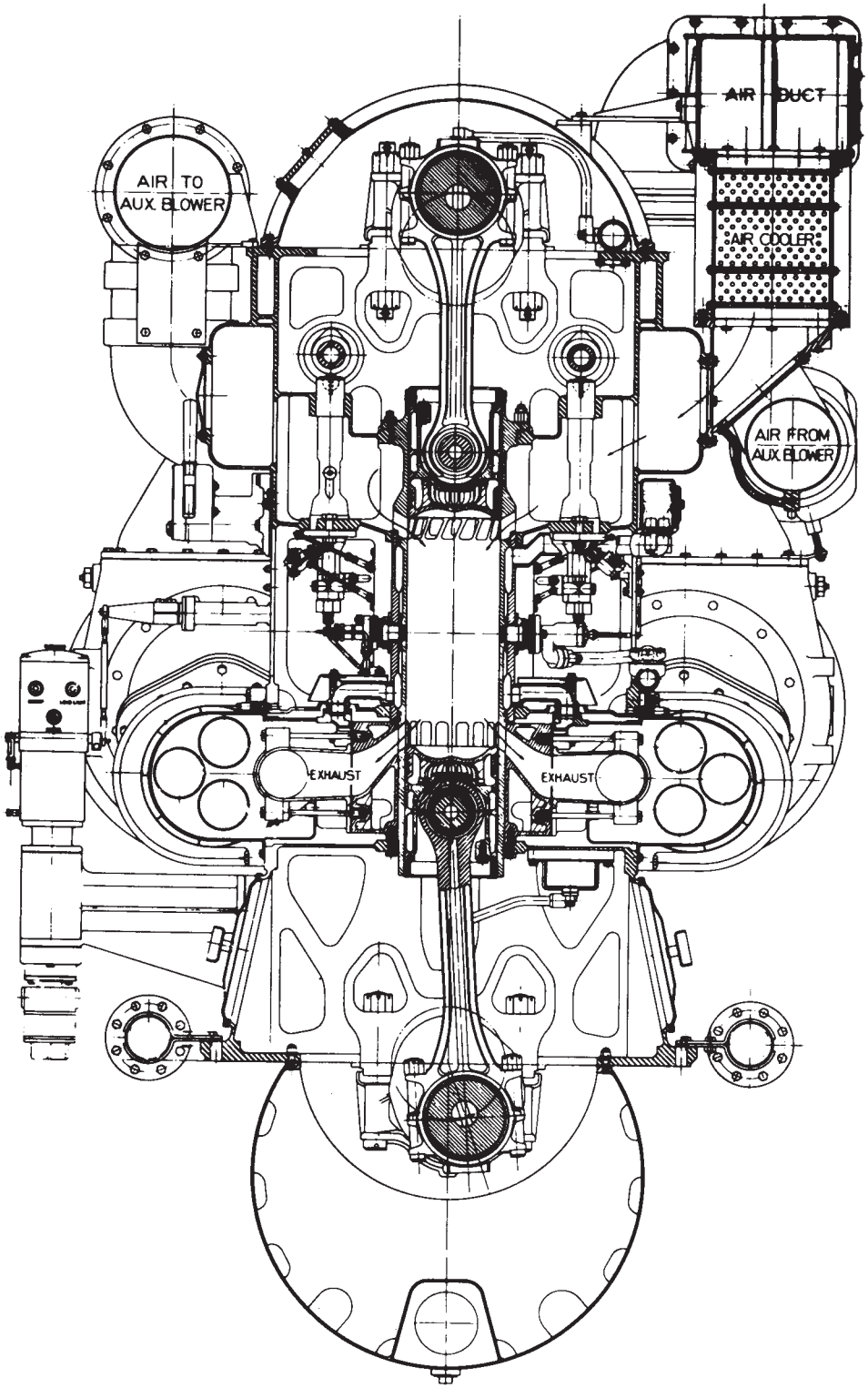
AIR DUCT
AIR TO
AUX. BLOWER
AIR COOLER
AIR FROM
AUX. BLOWER
EXHAUST
EXHAUST

MO-0070

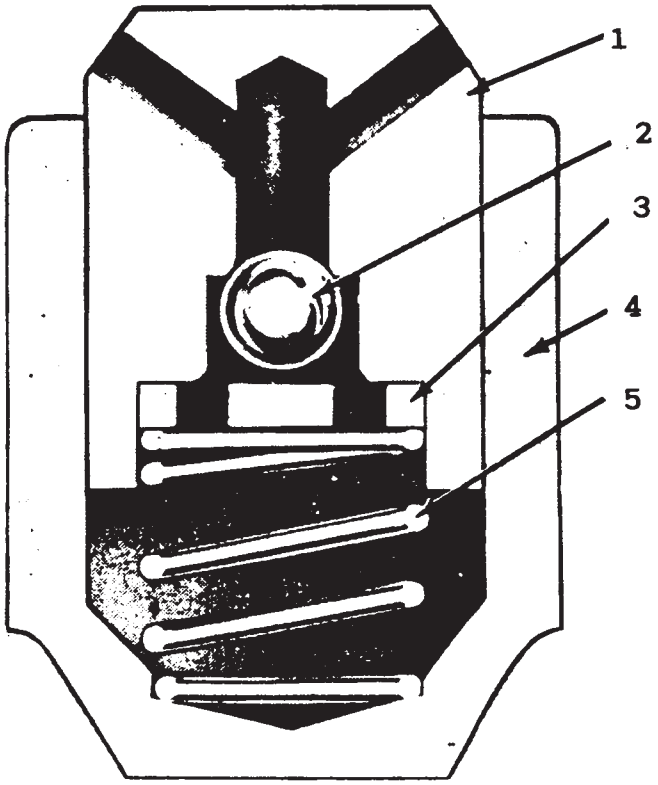

MO-0071

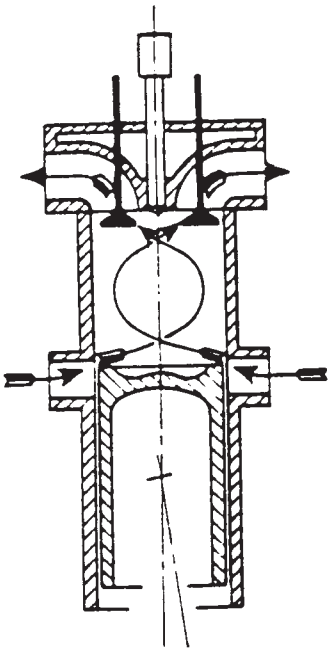

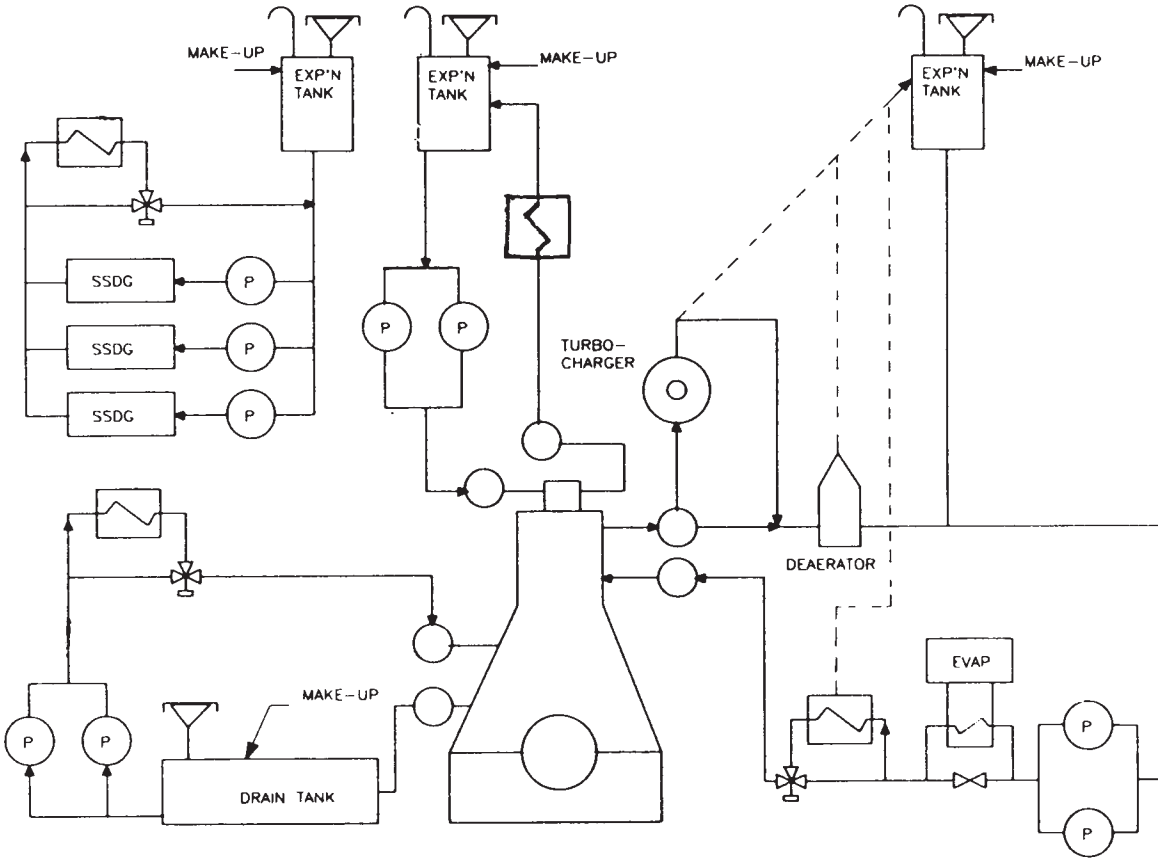
MAKE-UP
EXP'N TANK
MAKE-UP
EXP'N TANK
MAKE-UP
EXP'N TANK
SSDG
SSDG
SSDG
P
TURBO-CHARGER
DEAERATOR
EVAP
MAKE-UP
DRAIN TANK

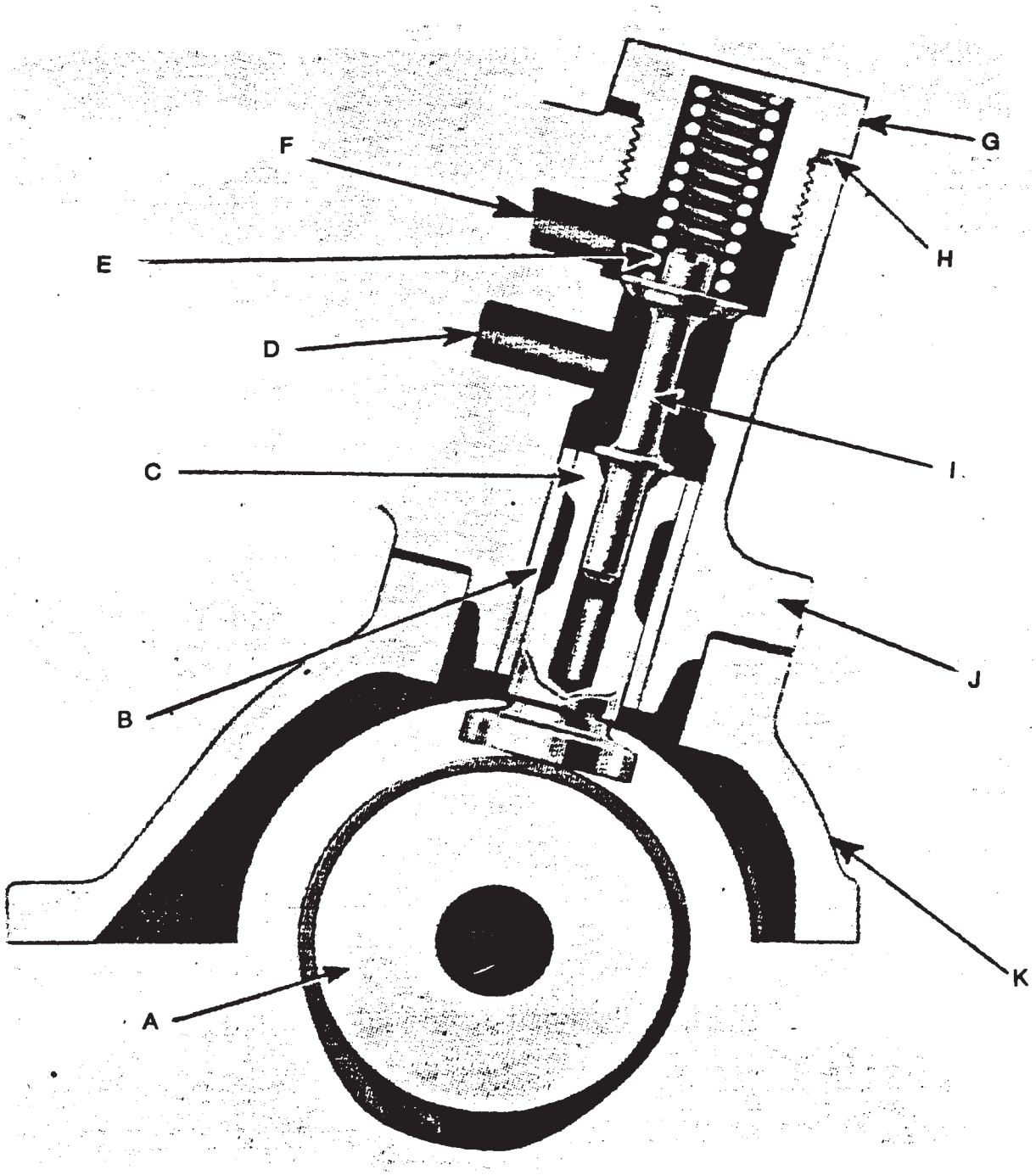
F
G
E
H
D
I
C
J
B
K
A

MO-0074

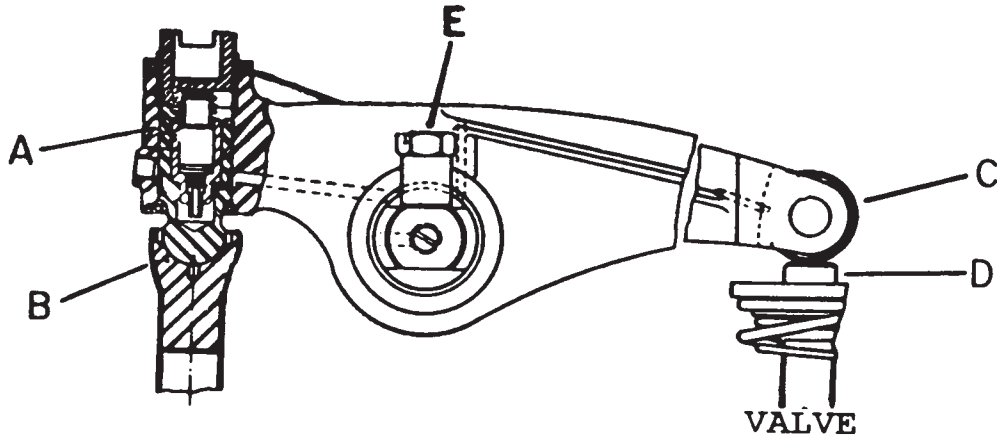
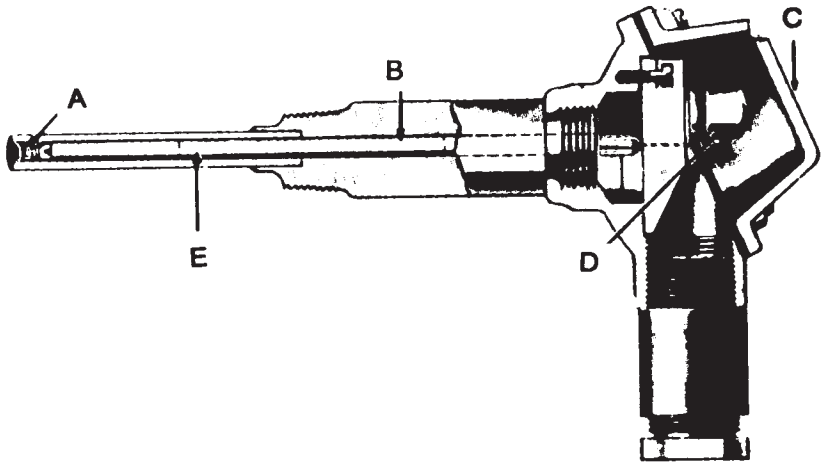
MO-0075