MO-0039

This information is for a two-stroke cycle marine engine and the flywheel is marked with reference to number one cylinder.

20-Cylinder	
Firing Order	Top Dead Center
1	0 DEGREES
14	27 "
9	36 "
16	63 "
4	72 "
13	99 "
6	108 "
20	135 "
3	144 "
12	171 "
10	180 "
17	207 "
2	216 "
15	243 "
7	252 "
18	279 "
5	288 "
11	315 "
8	324 "
19	351 "

MO-0040

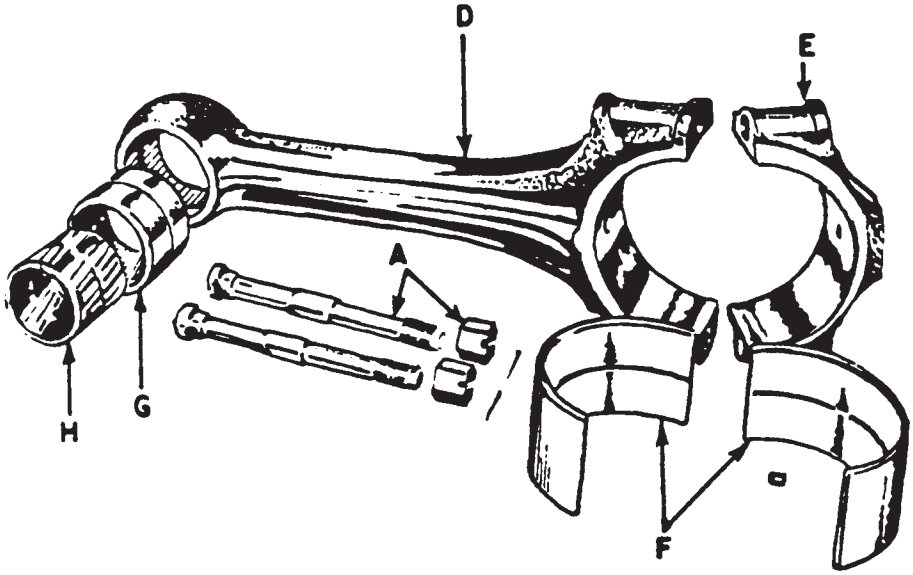

MO-0041

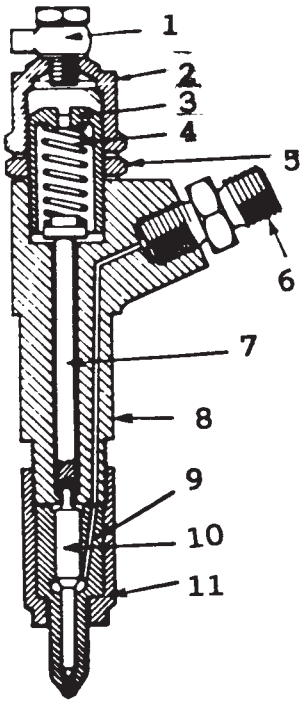

MO-0042

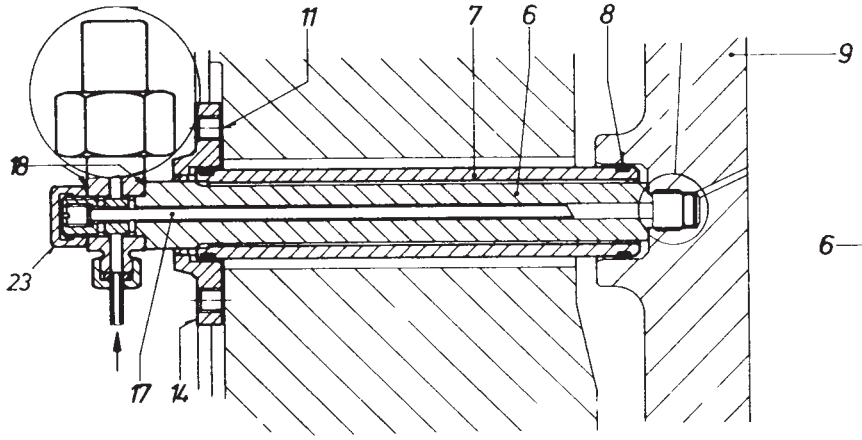

FIG. A

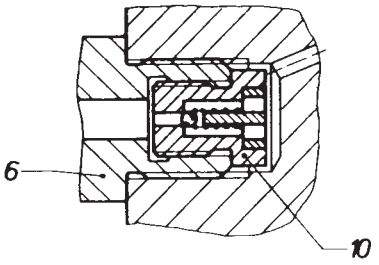

FIG. B

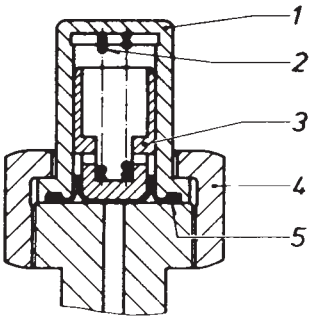

FIG. C

MO-0043

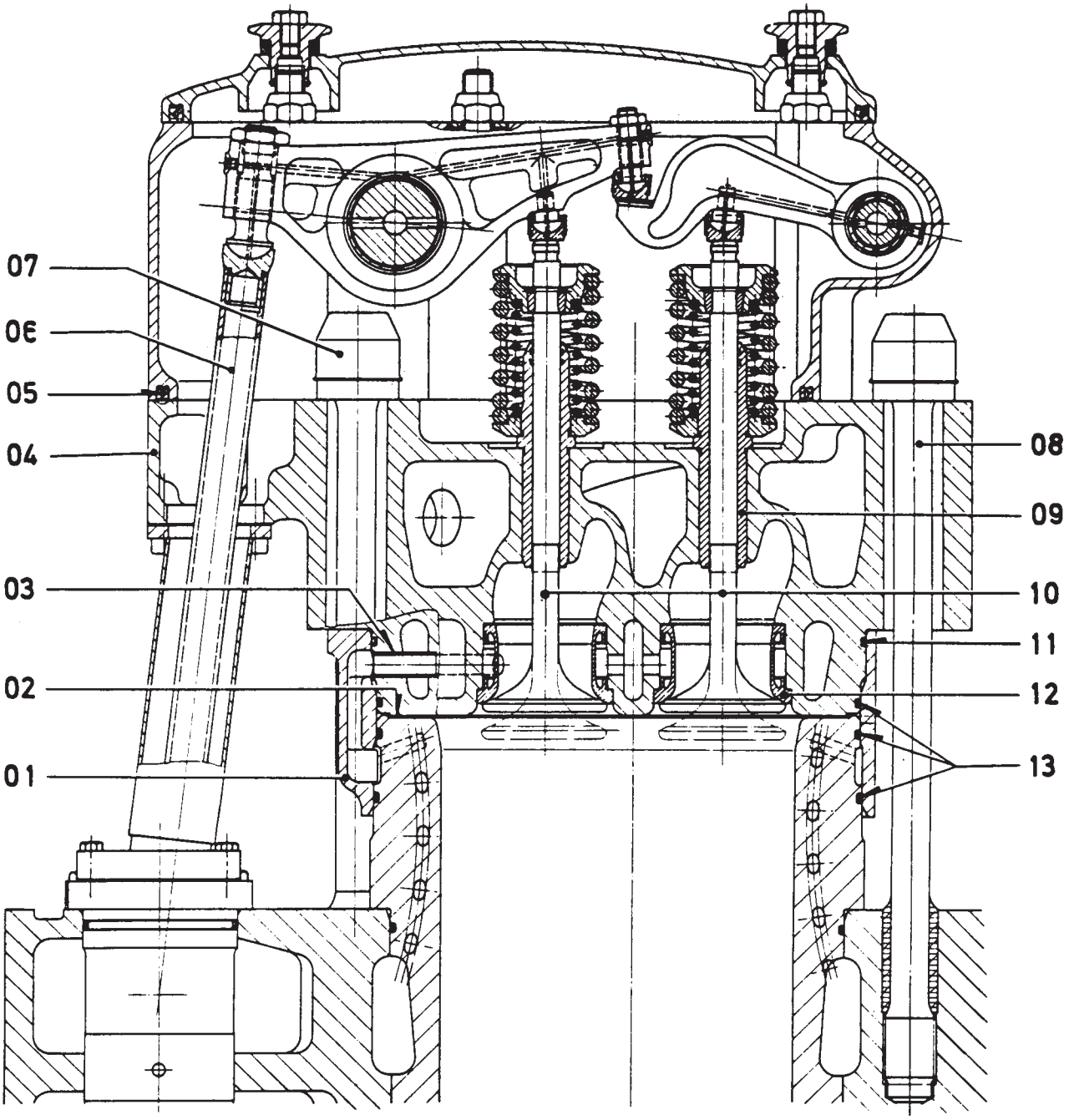

MO-0044

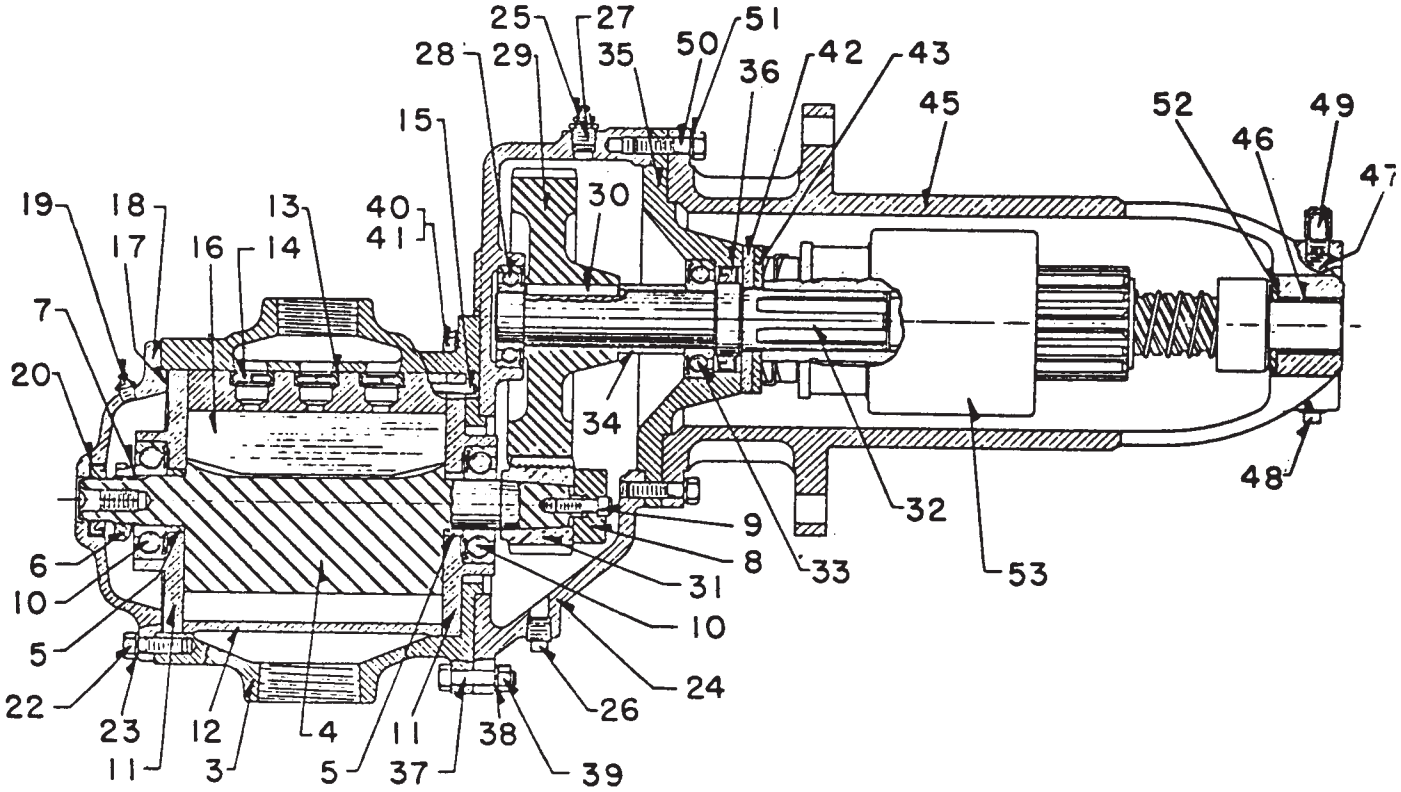

MO-0045

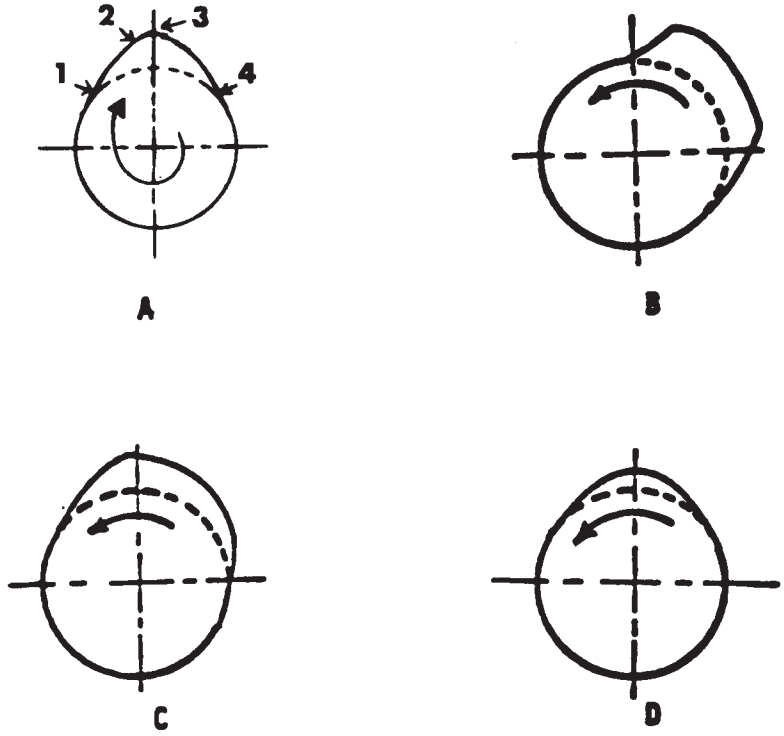

MO-0046

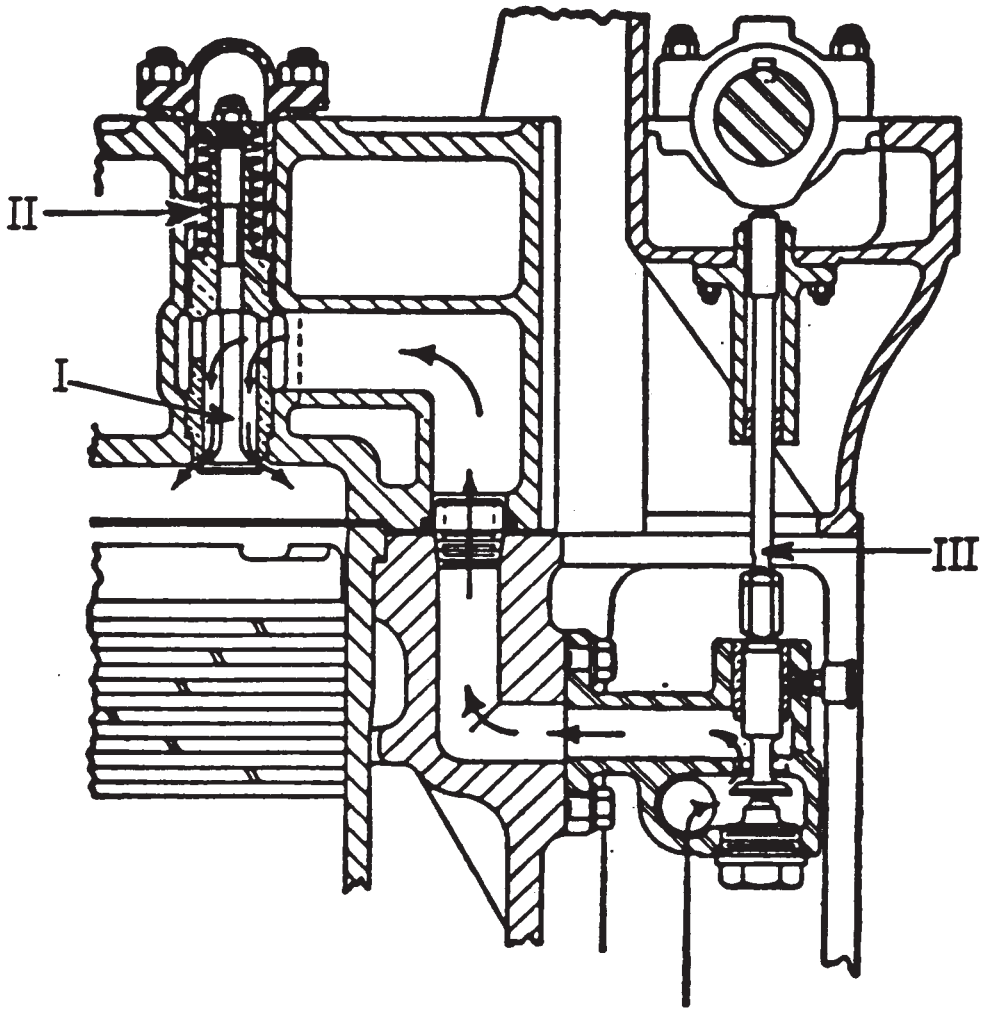

MO-0047

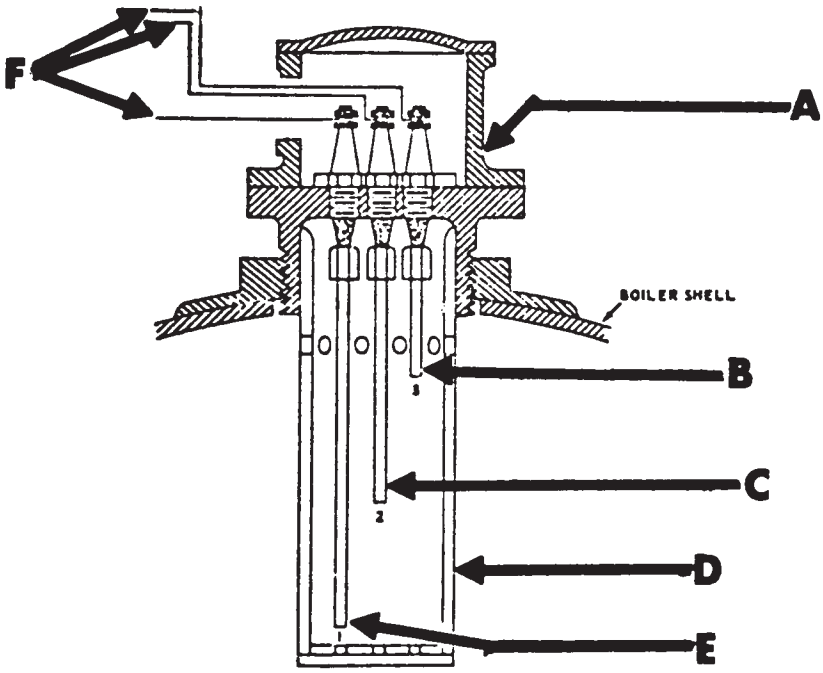

MO-0048

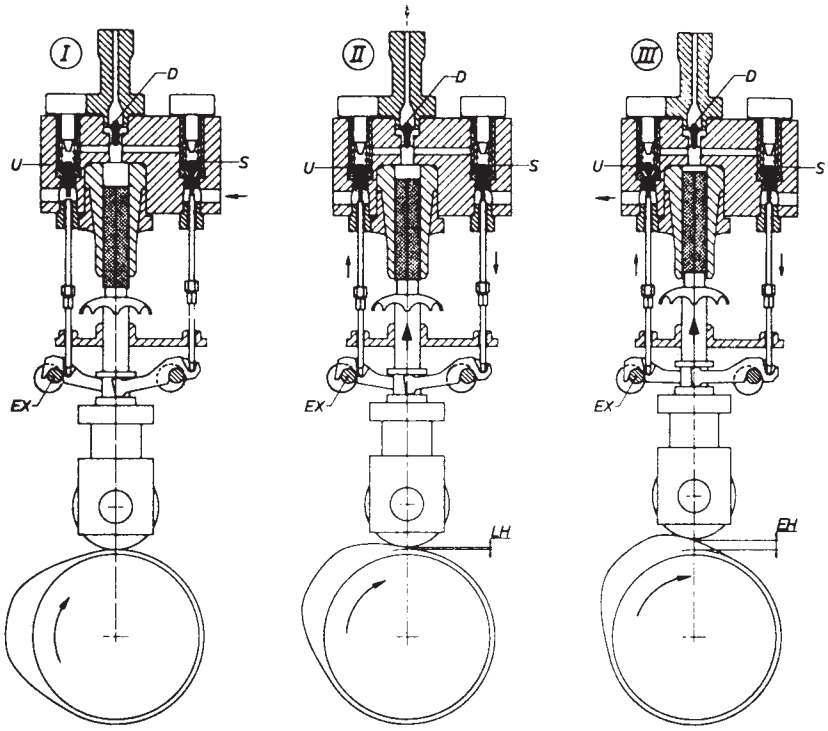

(Courtesy of New Sulzer Diesel)

MO-0049

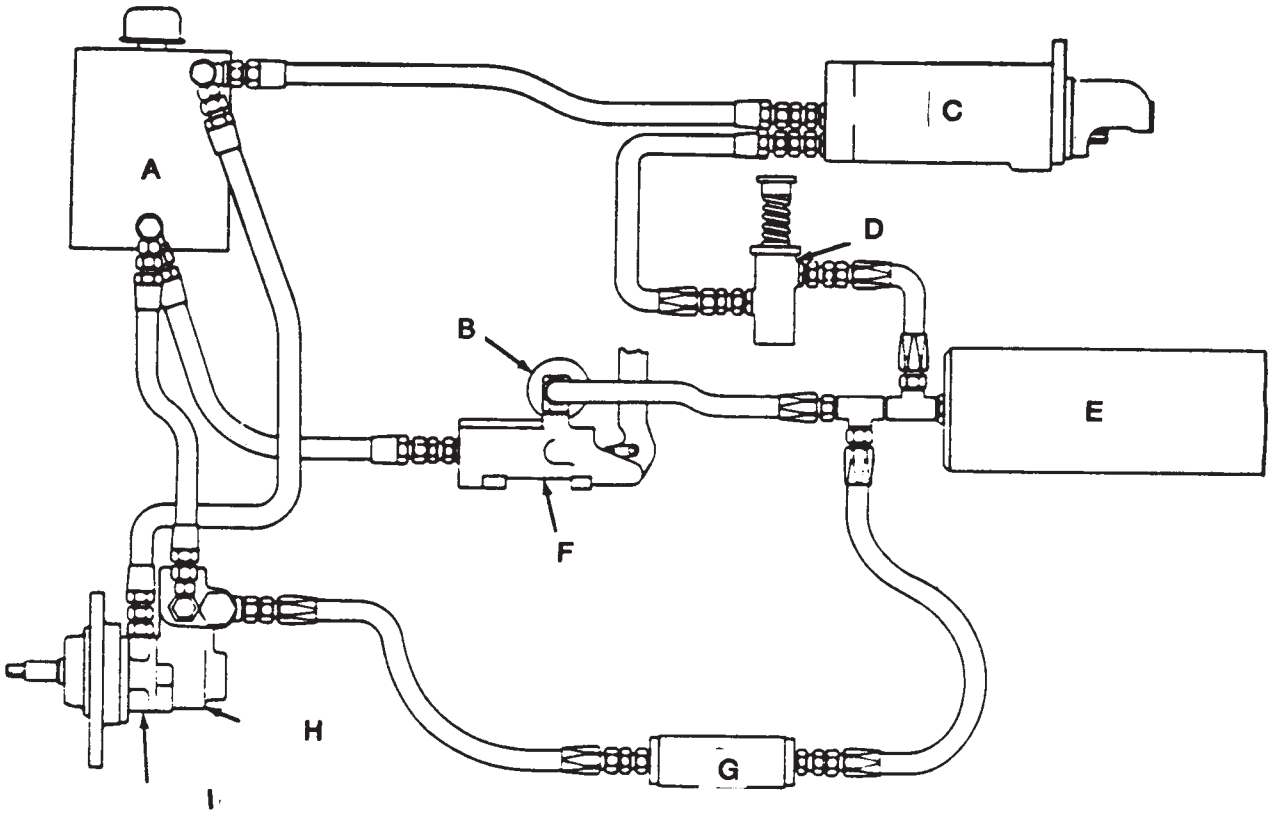

MO-0050

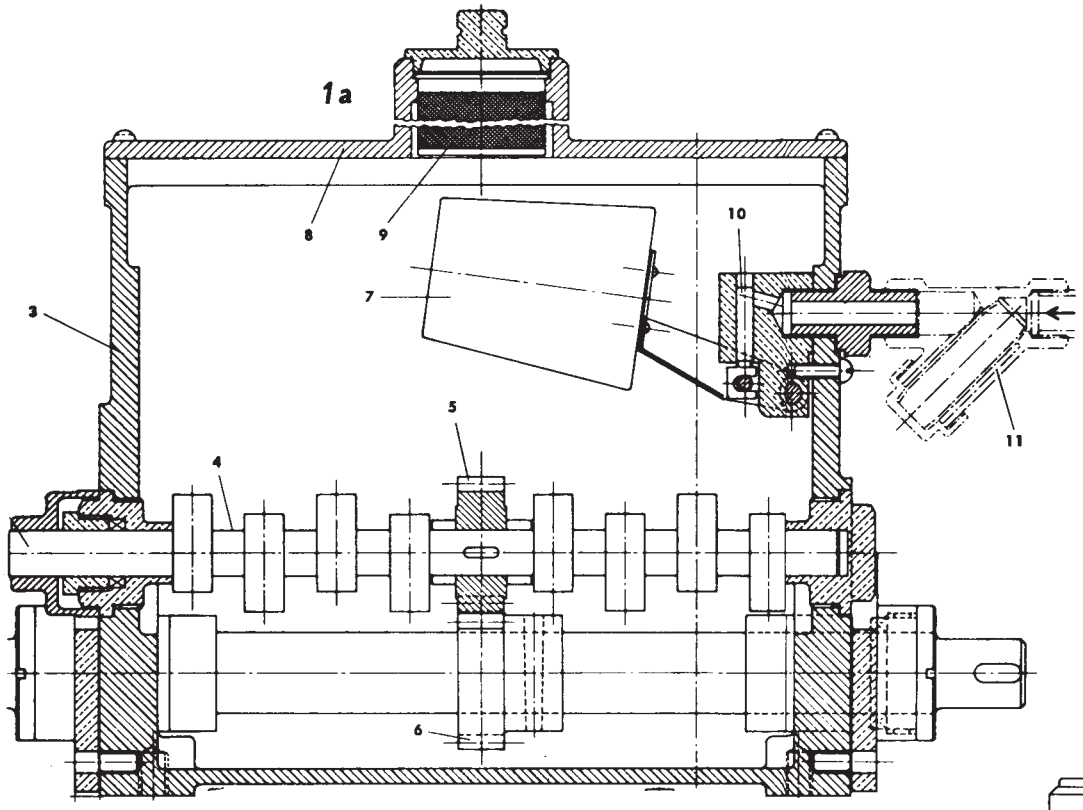

FIG. A

(Courtesy of New Sulzer Diesel)

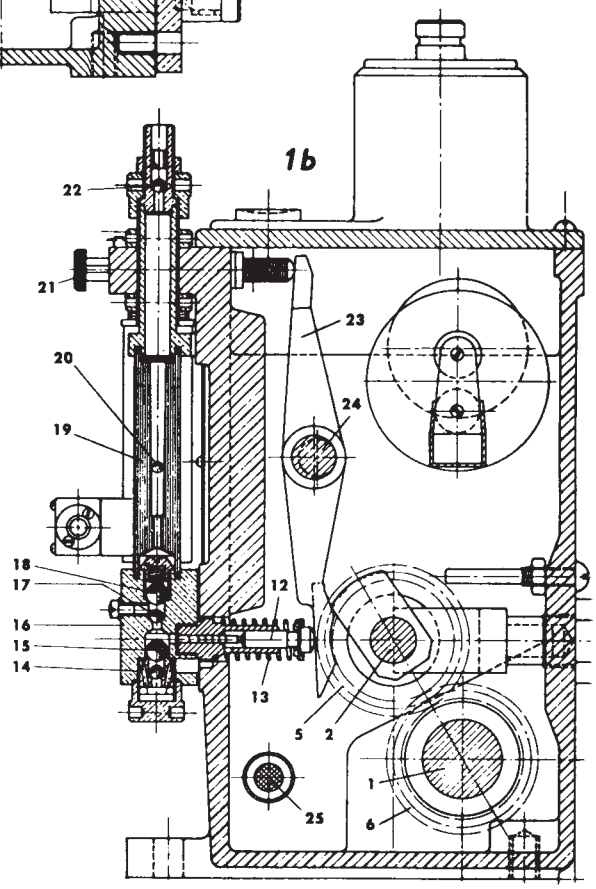

FIG. B

MO-0051

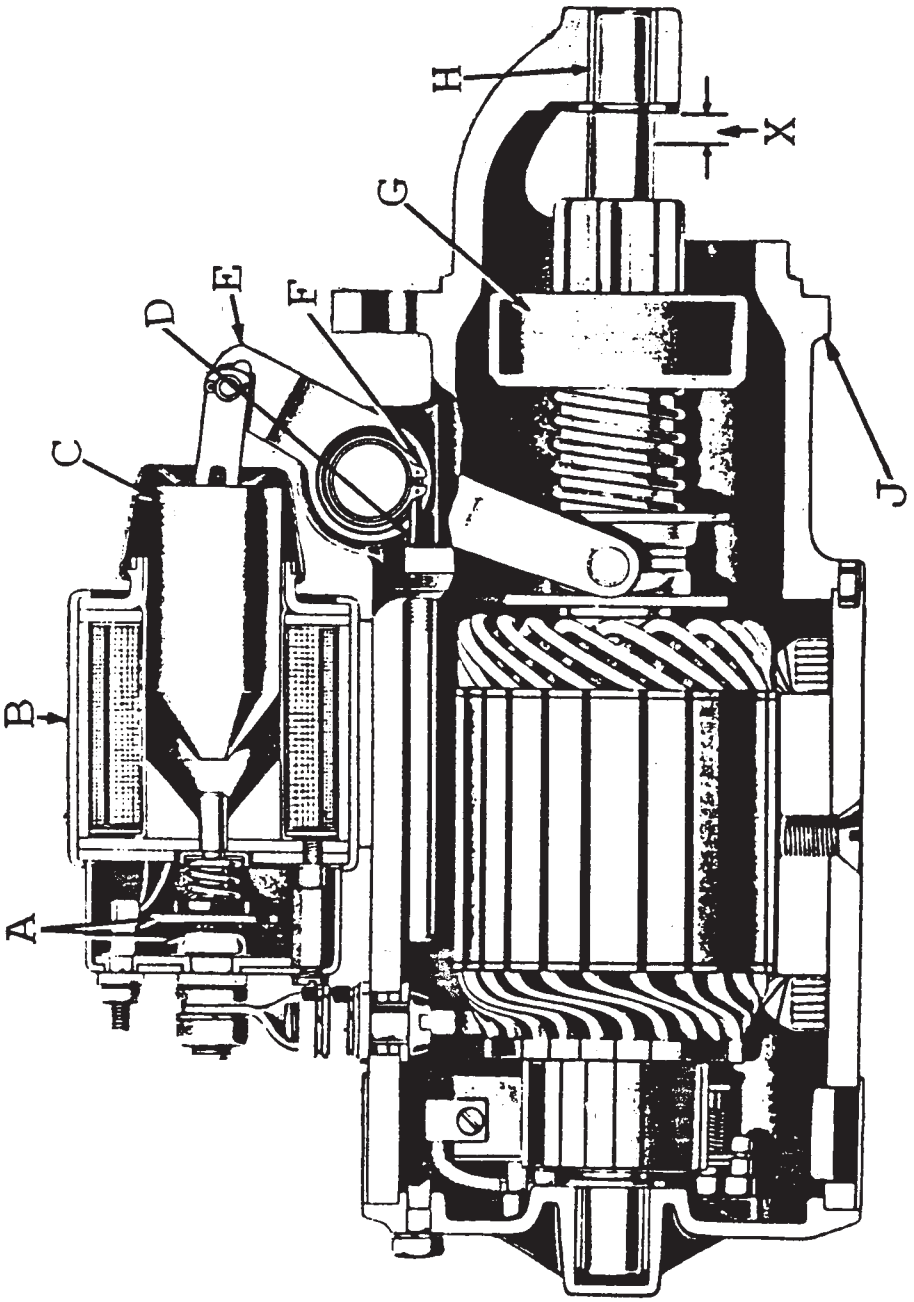

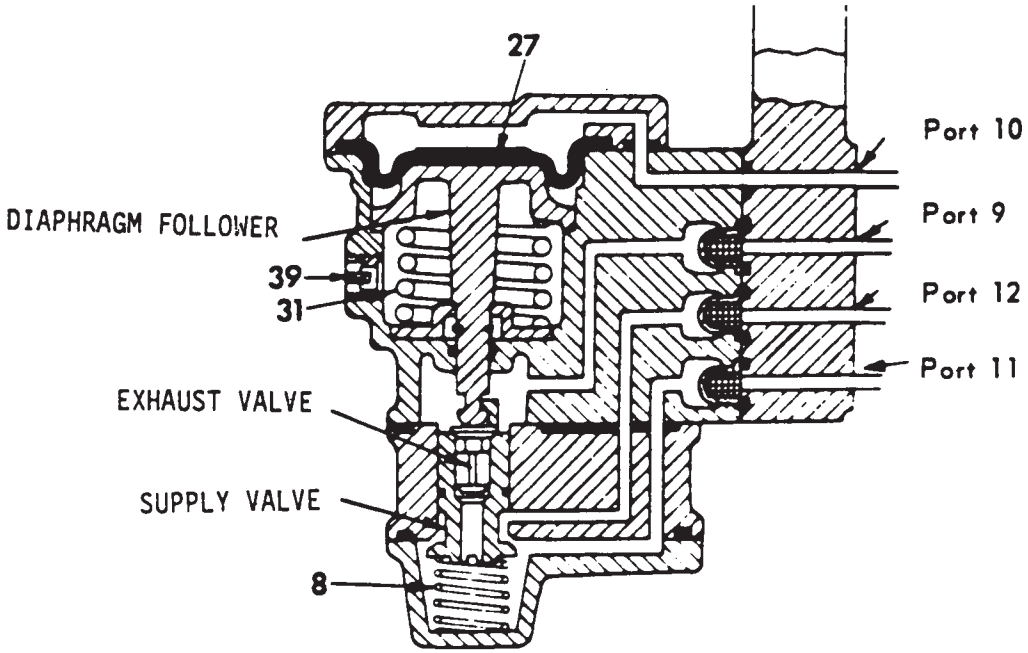

APPLIED POSITION

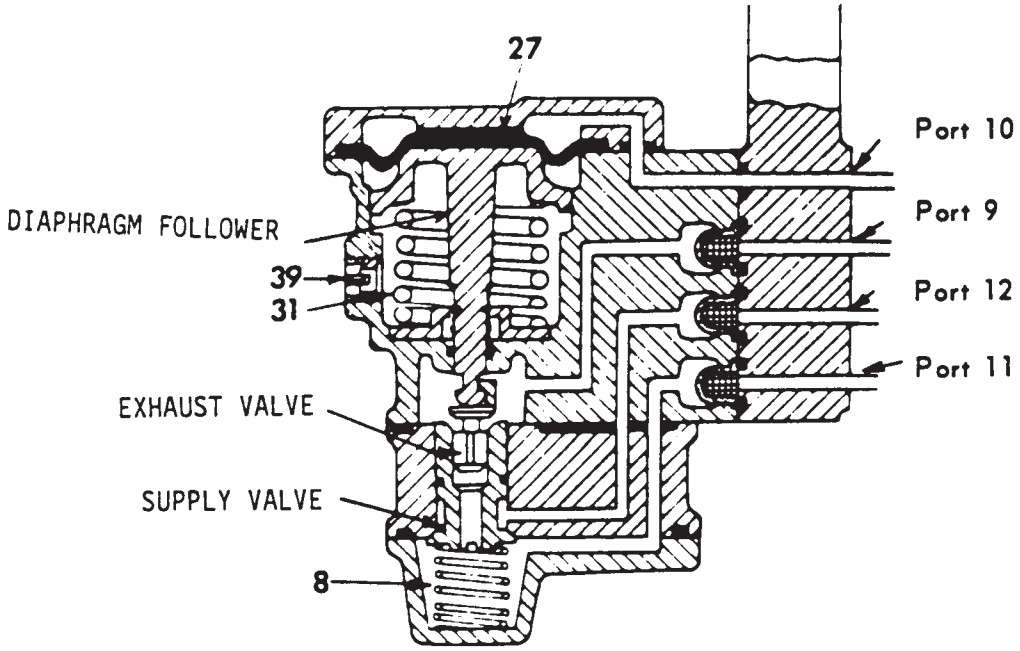

RELEASED POSITION

STARTING CONTROL AIR DISTRIBUTOR

A. Control air pipe
B. Annular space
C. Air inlet
D. Discharge space
E. Discharge line
F. Distribution space
H. Closing pipe to starting air valve
J. Opening pipe to starting air valve

1. Upper shaft of vertical drive
2. Bush for starting control valve
3. Starting control valve
4. Valve housing
5. Starting cam (insert)
6. Cover

NOTES: The illustrated "starting control air distributor" is sectioned to show the operation of one starting control valve (3) of which there are several. These valves are arranged radially in a common plane and operated by a common starting cam (5). The air inlet (C), discharge line (E), and control air pipe (A), are common to the entire bank of starting control valves (3).

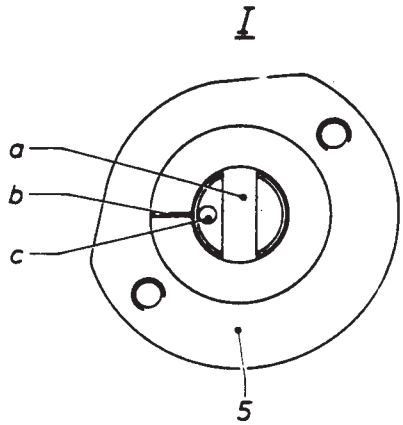

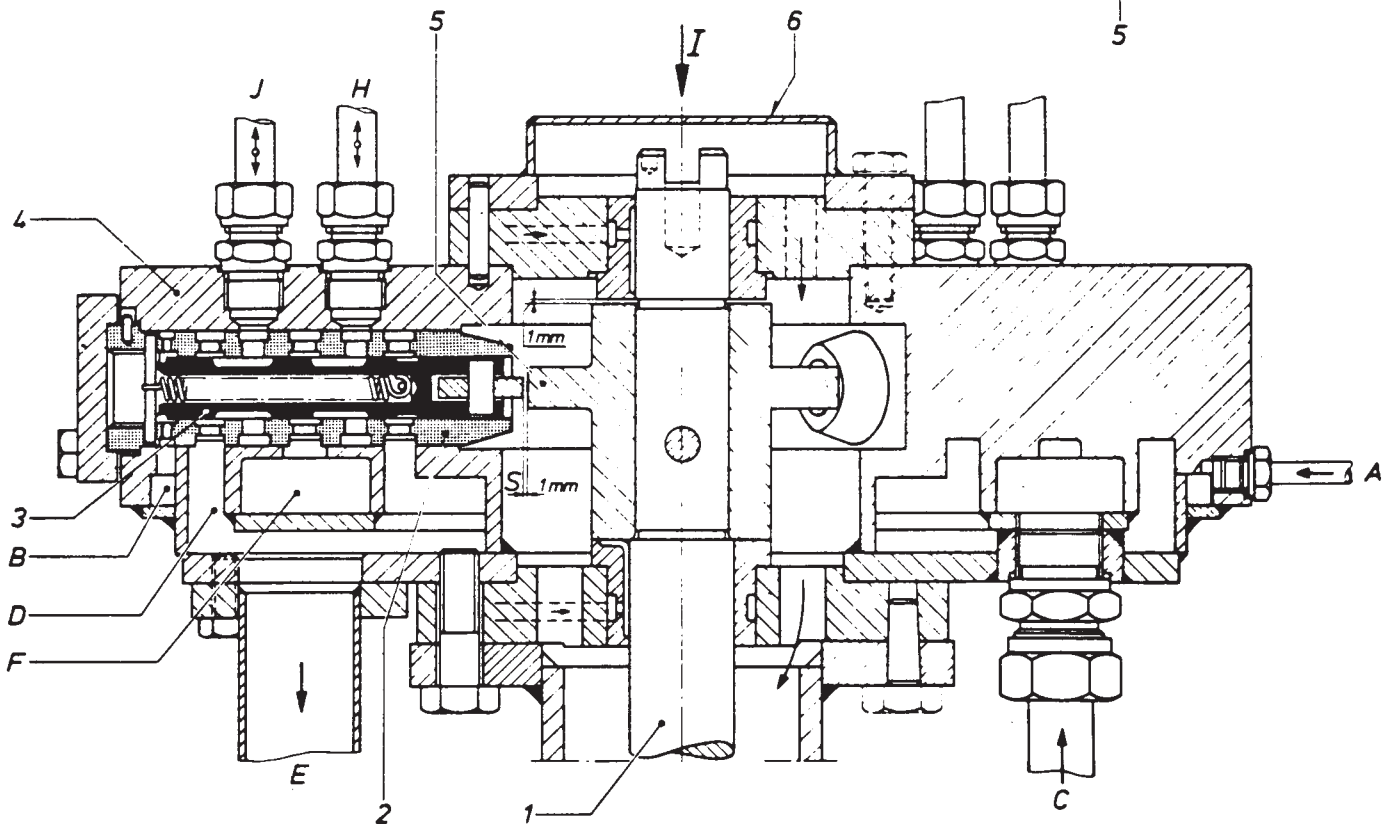

MO-0054

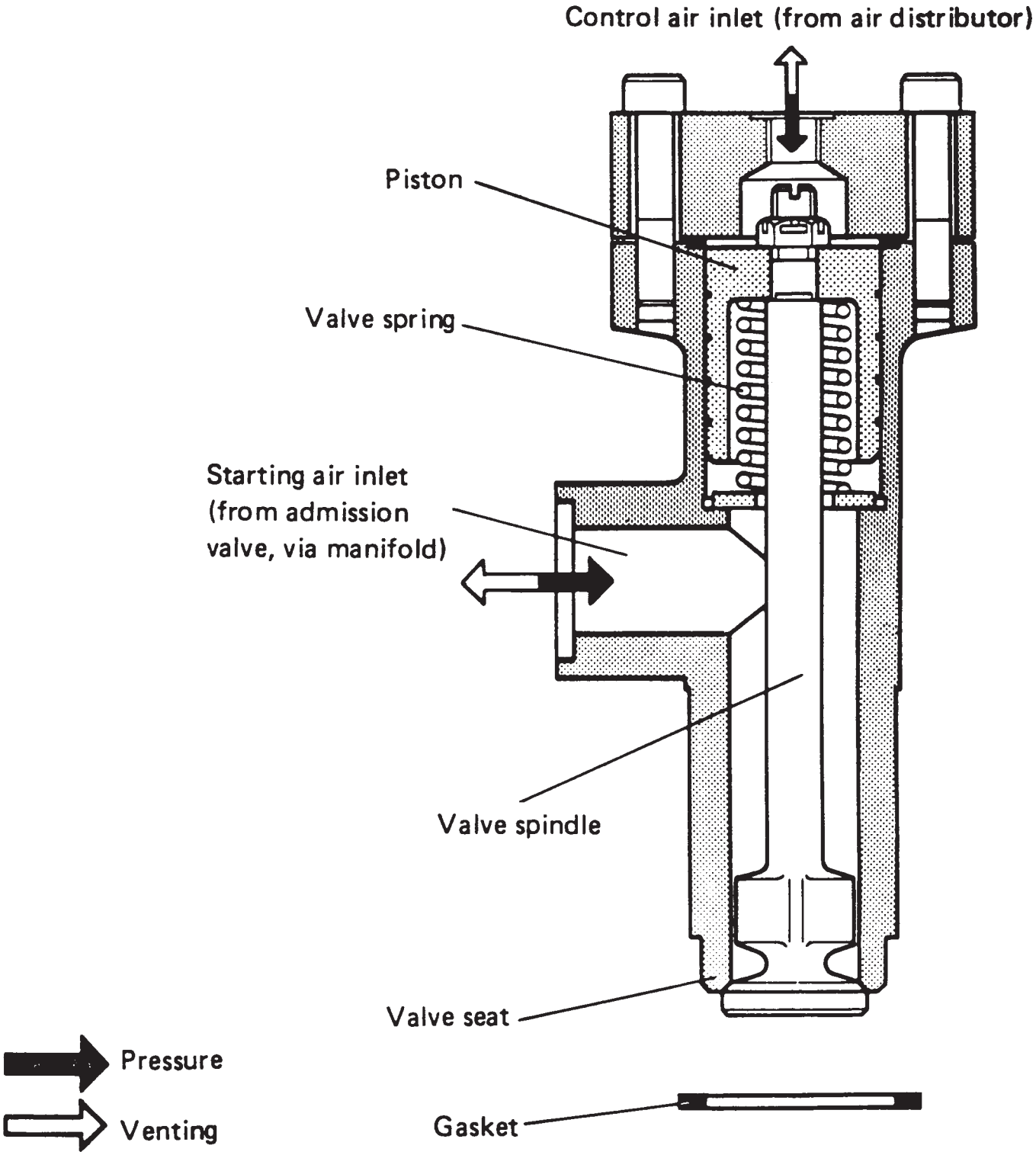
Control air inlet (from air distributor)
Piston
Valve spring
Starting air inlet
(from admission
valve, via manifold)
Valve spindle
Valve seat
Pressure
Venting
Gasket

MO-0055

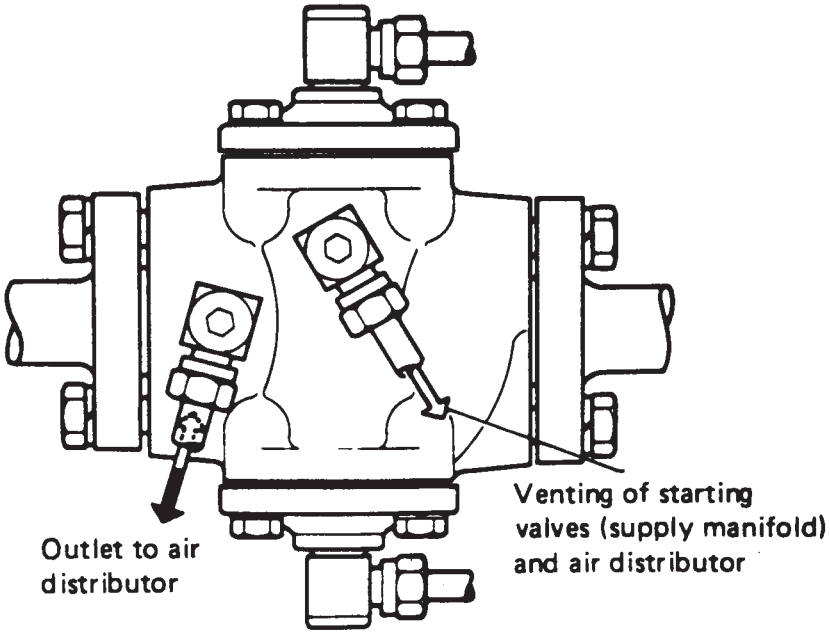
Venting of starting valves (supply manifold) and air distributor
Outlet to air distributor

Pressure
Venting

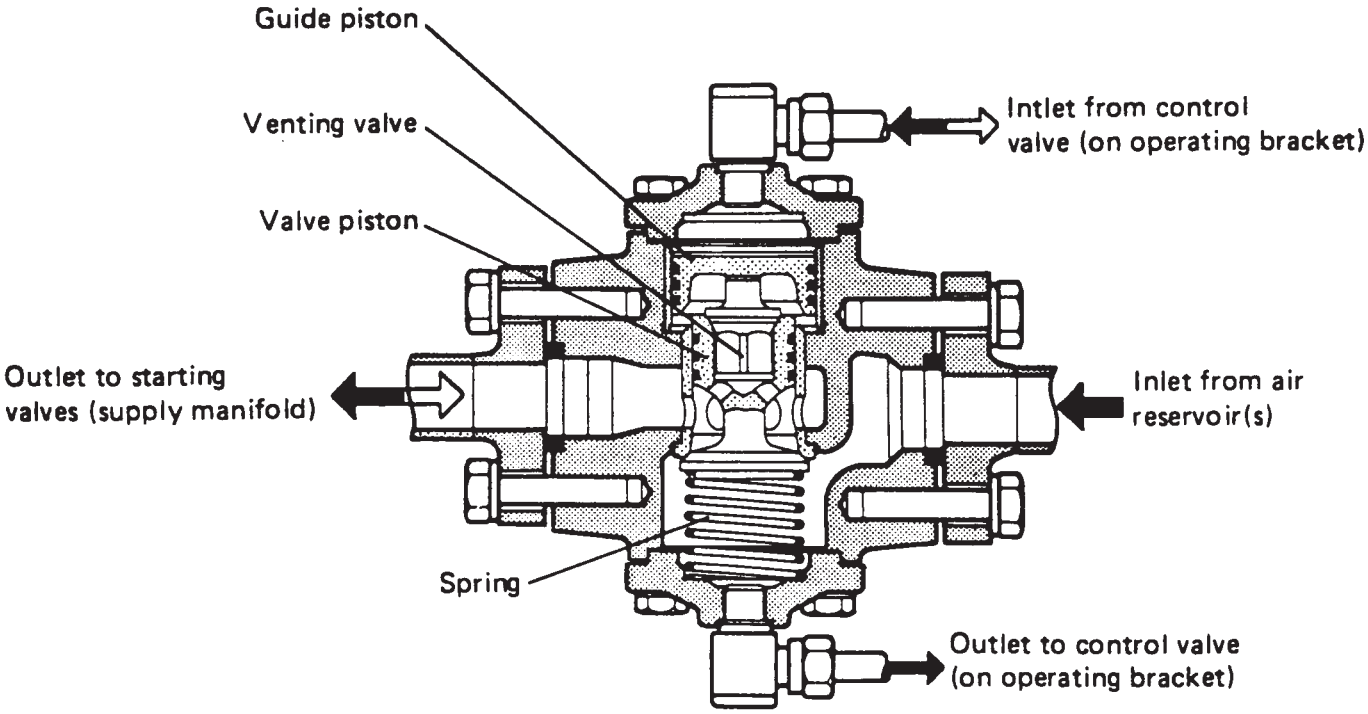
Guide piston
Venting valve
Valve piston
Intlet from control valve (on operating bracket)
Outlet to starting valves (supply manifold)
Inlet from air reservoir(s)
Spring
Outlet to control valve (on operating bracket)

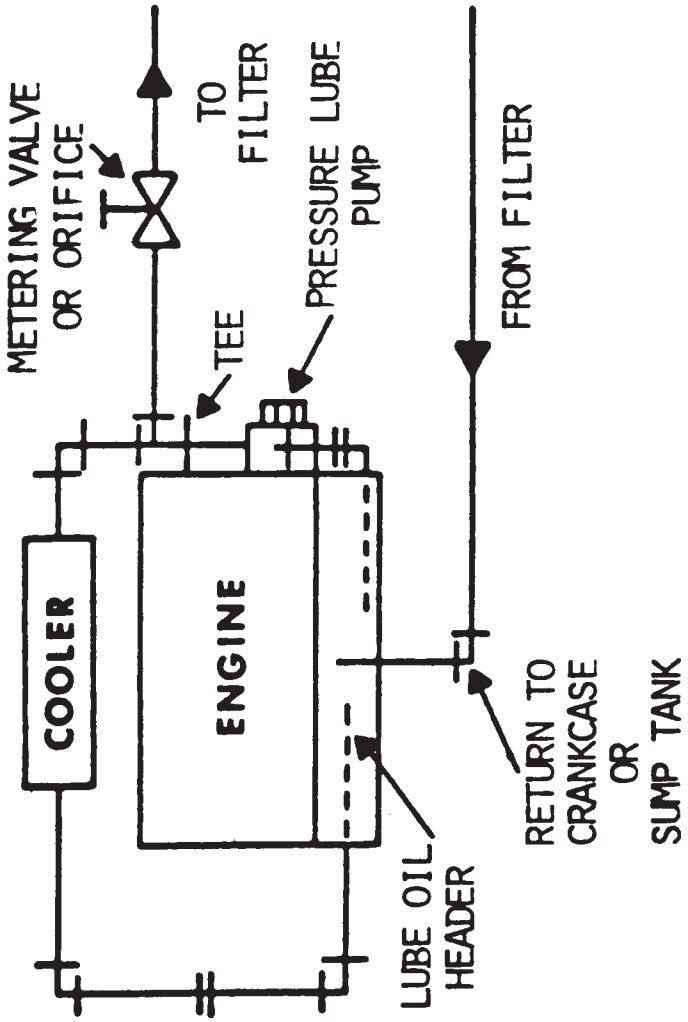
COOLER
ENGINE
METERING VALVE
OR ORIFICE
TEE
TO
FILTER
PRESSURE LUBE
PUMP
FROM FILTER
LUBE OIL
HEADER
RETURN TO
CRANKCASE
OR
SUMP TANK
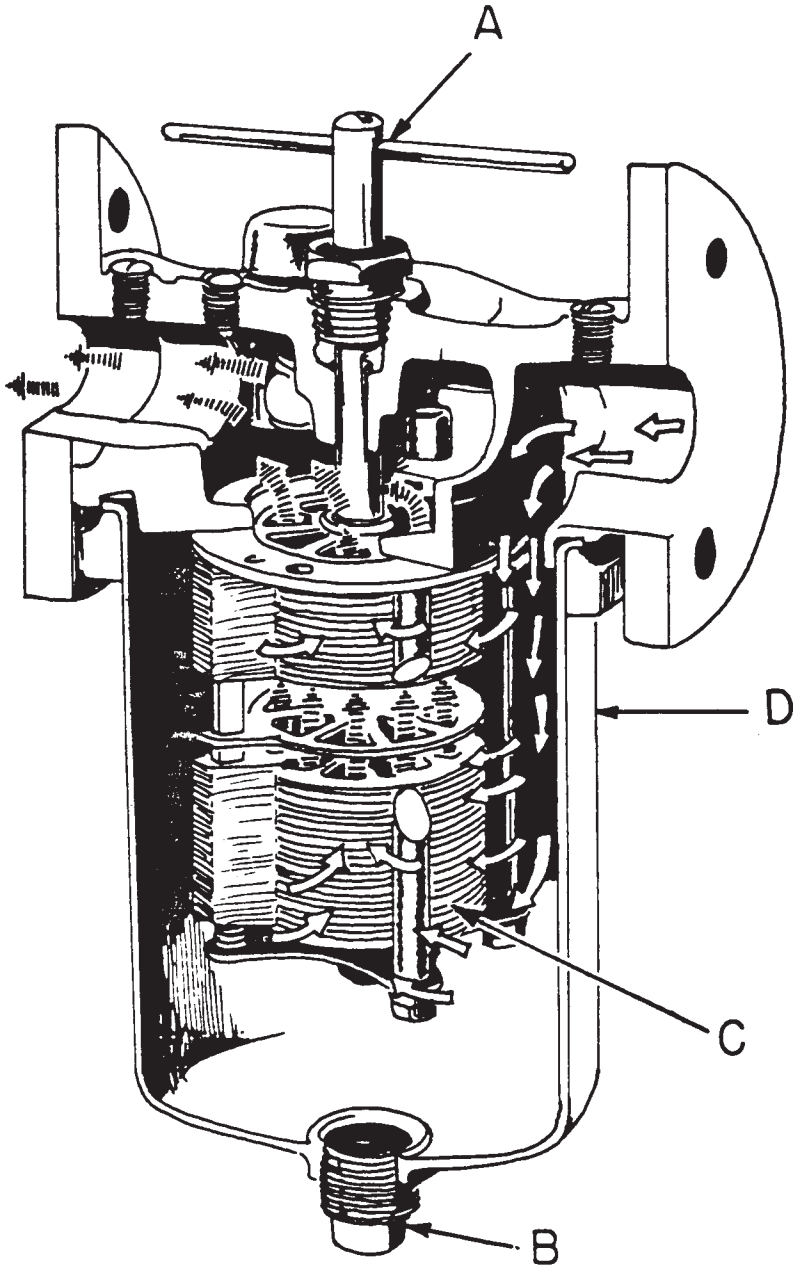
MO-0057