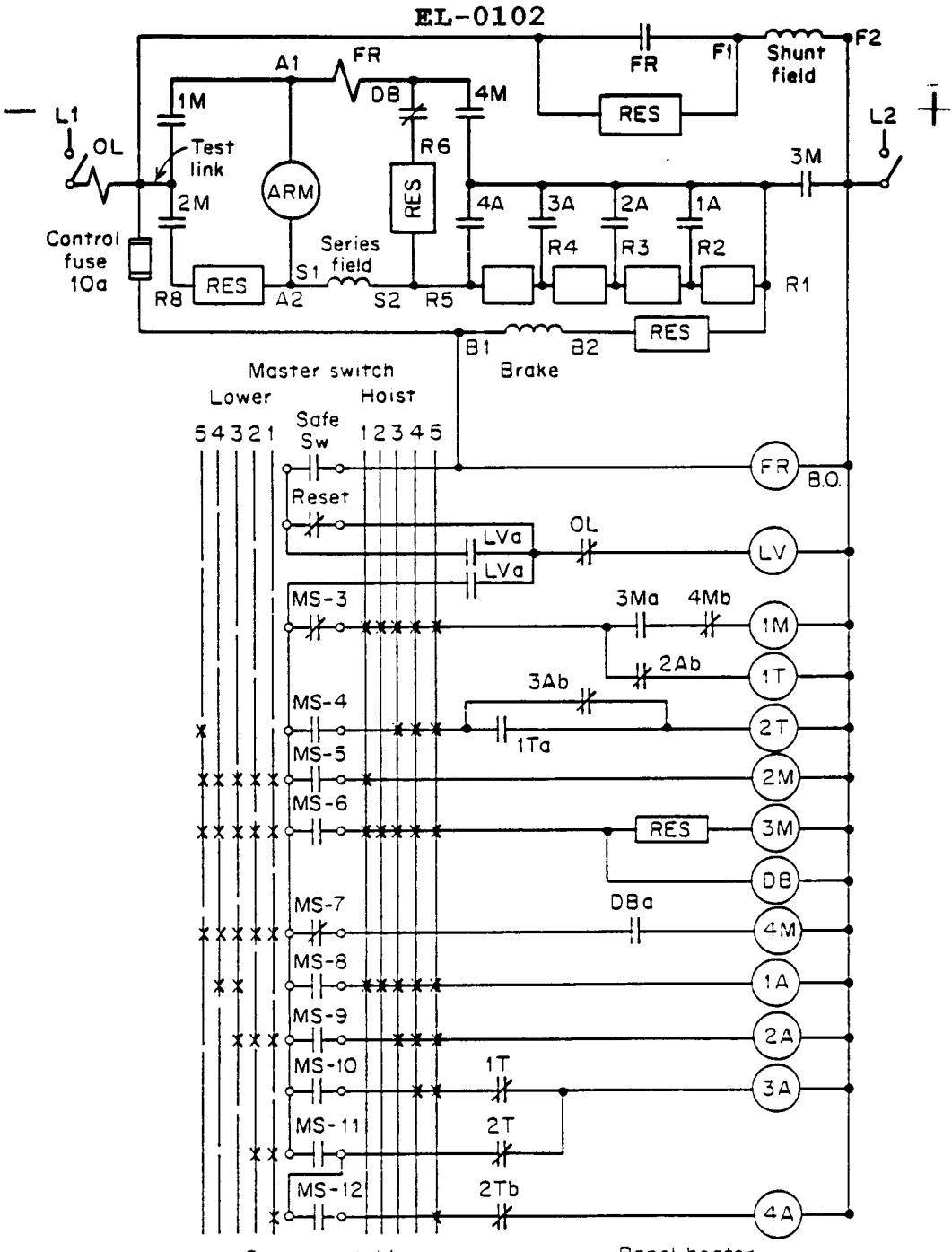

Sequence table

Con-Tact	Lower 5	Lower 4	Lower 3	Lower 2	Lower 1	Off	Hoist 1	Hoist 2	Hoist 3	Hoist 4	Hoist 5
1M							X	X	X	X	X
2M	X	X	X	X	X		X				
3M	X	X	X	X	X		X	X	X	X	X
4M	X	X	X	X	X						
1A		X	X				X	X	X	X	X
2A			X	X	X				X	X	X
3A				X	X					X	X
4A					X						X
DB						X					

Elementary diagram for a dc hoist controller. (Courtesy of Westinghouse Electric Corp.)