GS-0114

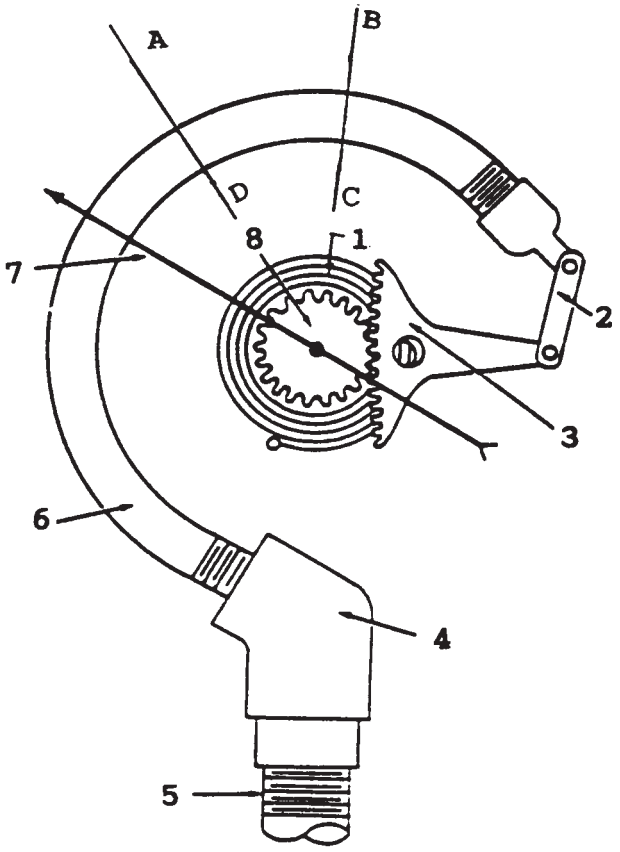

GS-0115

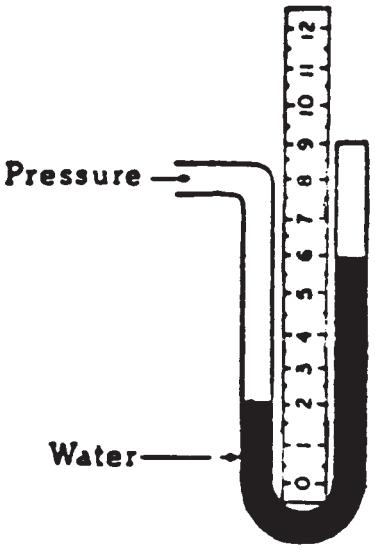

GS-0116

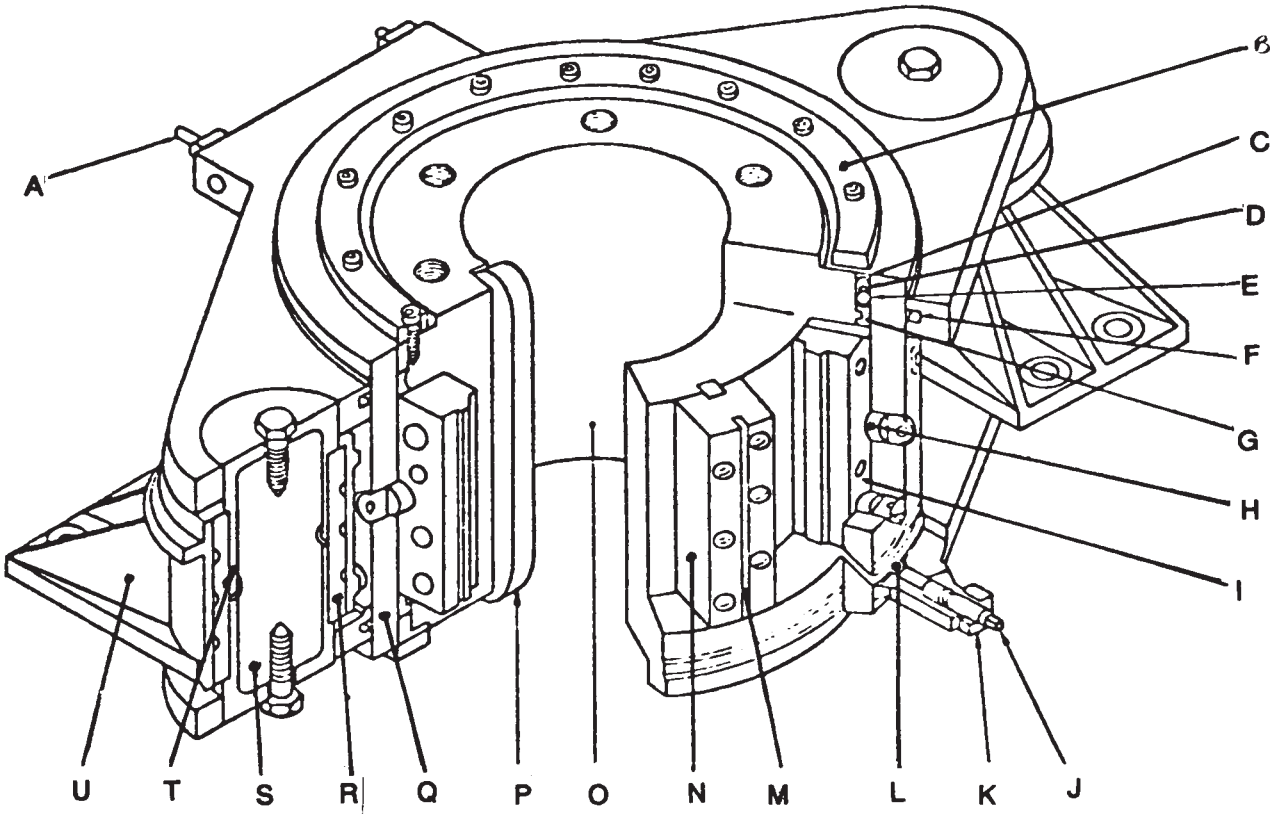

GS-0117

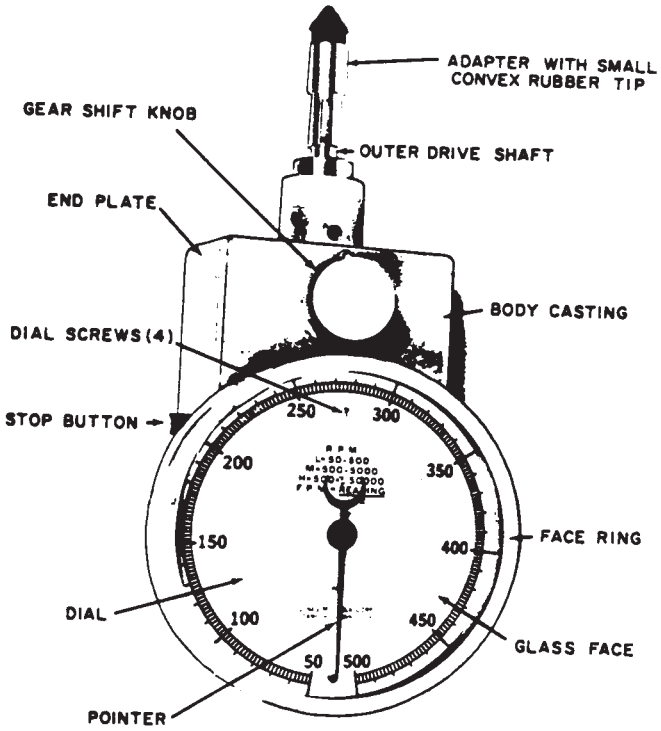

GS-0118

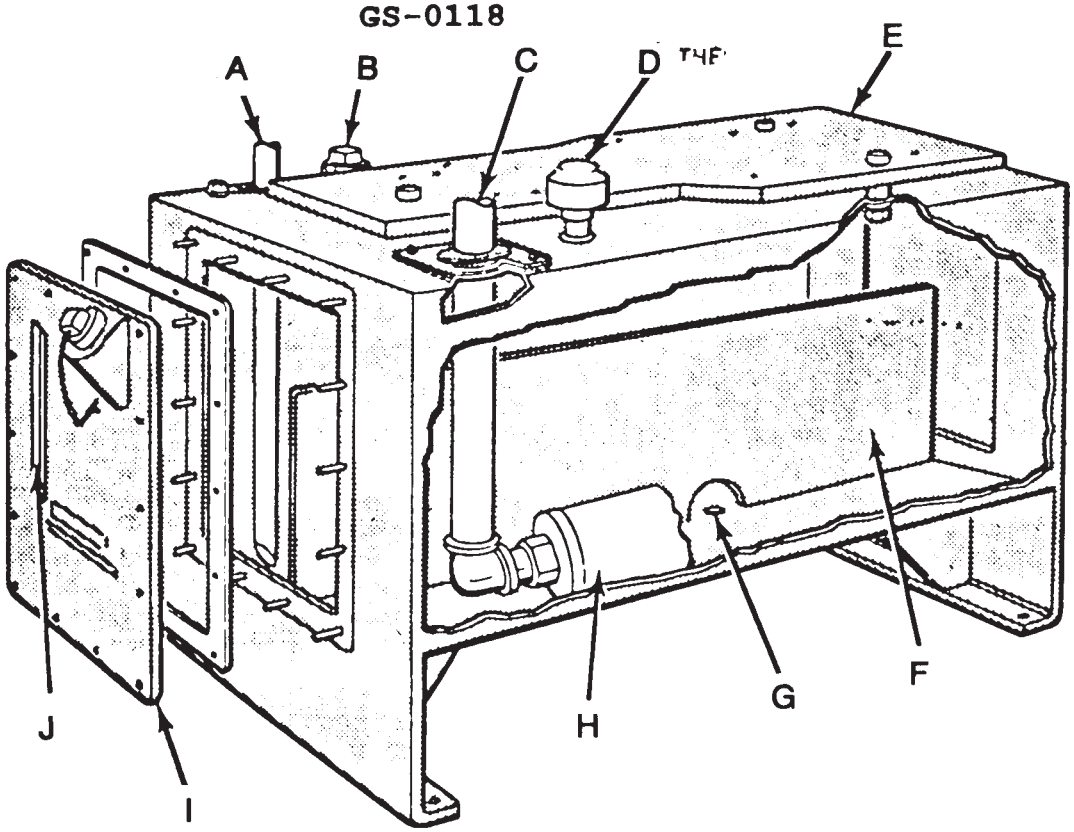

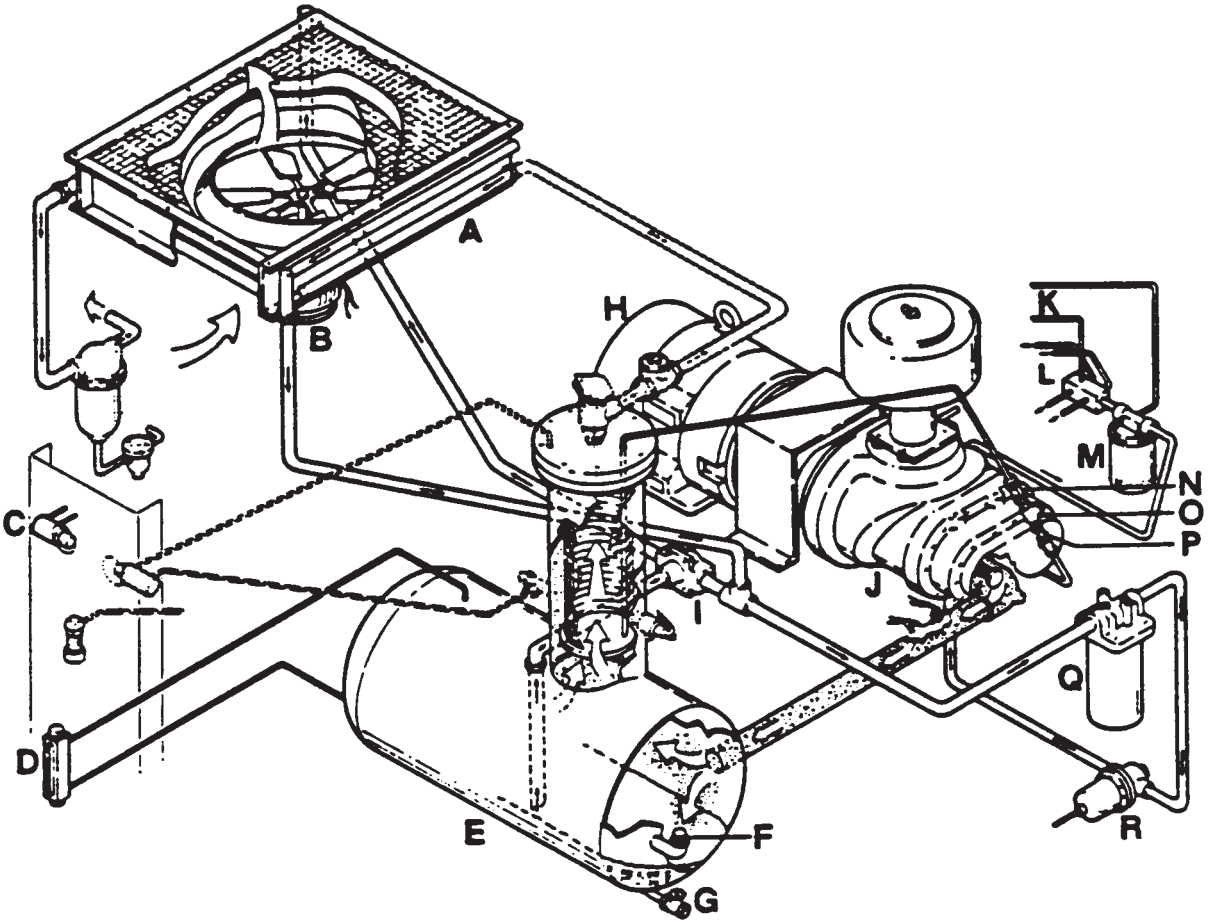

A – FLUID COOLER (TOP)

B – FAN MOTOR

C – BEARING FILTER MAINTENANCE INDICATOR

D – FLUID LEVEL SIGHT GLASS

E – RECEIVER SUMP

F – FLUID FILL CAP

G – FLUID DRAIN

H – MOTOR

I – THERMAL VALVE

J – COMPRESSOR UNIT

K – TO BEARING FILTER MAINTENANCE INDICATOR

L – FLUID MANIFOLD TO COMPRESSOR BEARINGS

M – BEARING FLUID FILTER

N – FLUID RETURN LINE SIGHT GLASS

O – RETURN LINE STRAINER

P – ORIFICE

Q – MAIN FLUID FILTER

R – FLUID STOP VALVE

(COURTESY OF SULLAIR CORPORATION)

GS-0120

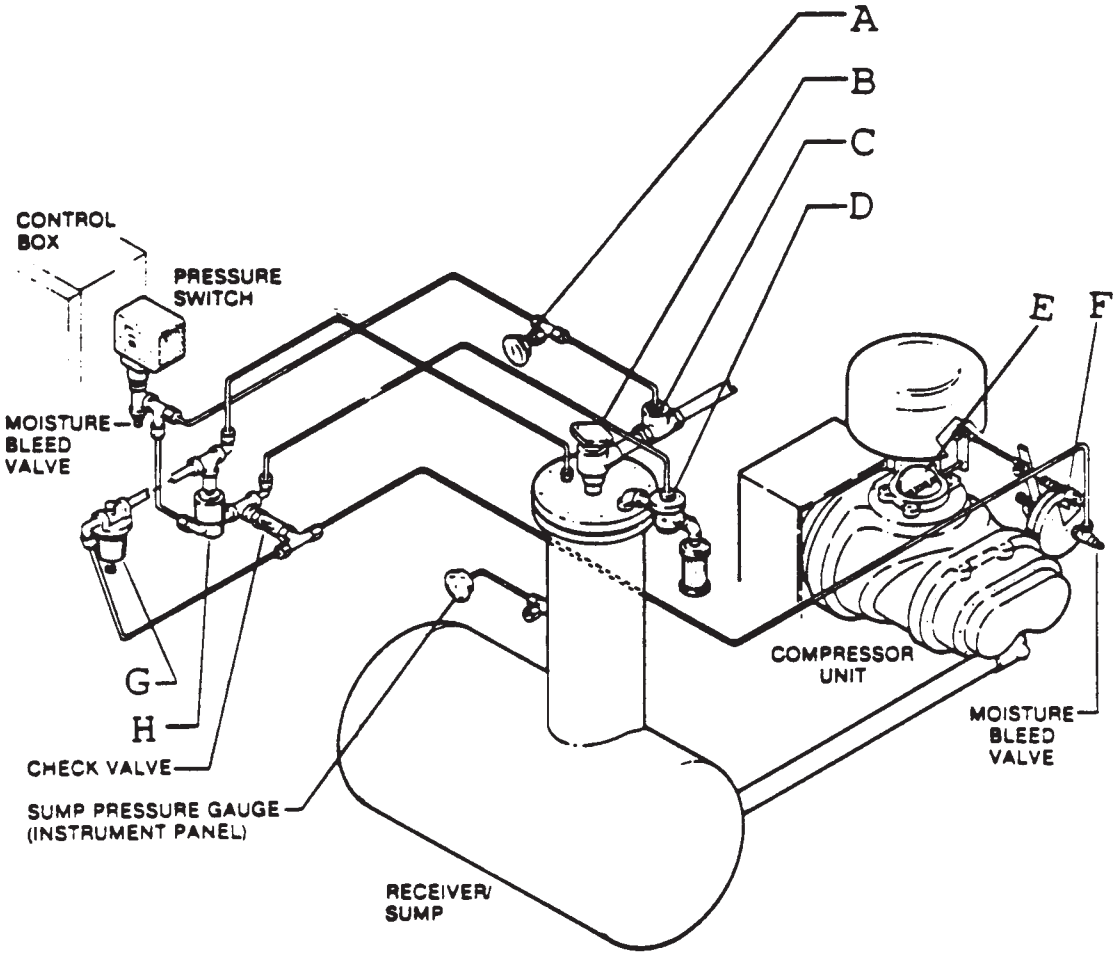

(COURTESY OF SULLAIR CORP.)

GS-0121

A

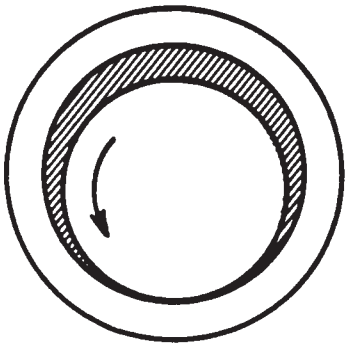

B

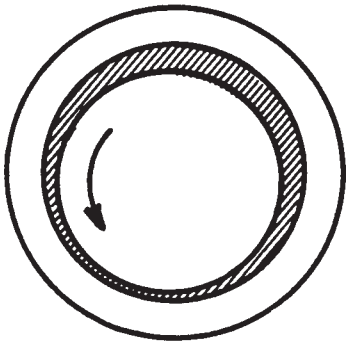

C

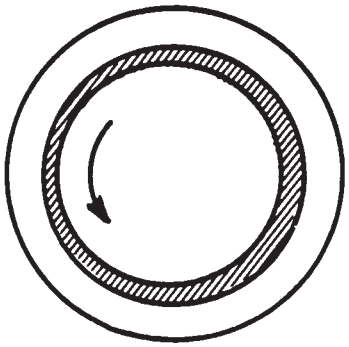

D

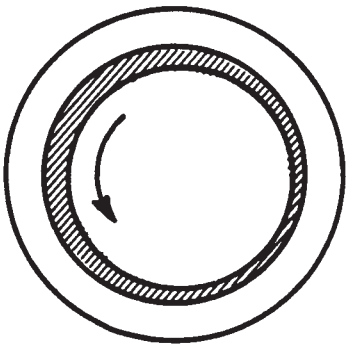

GS-0122

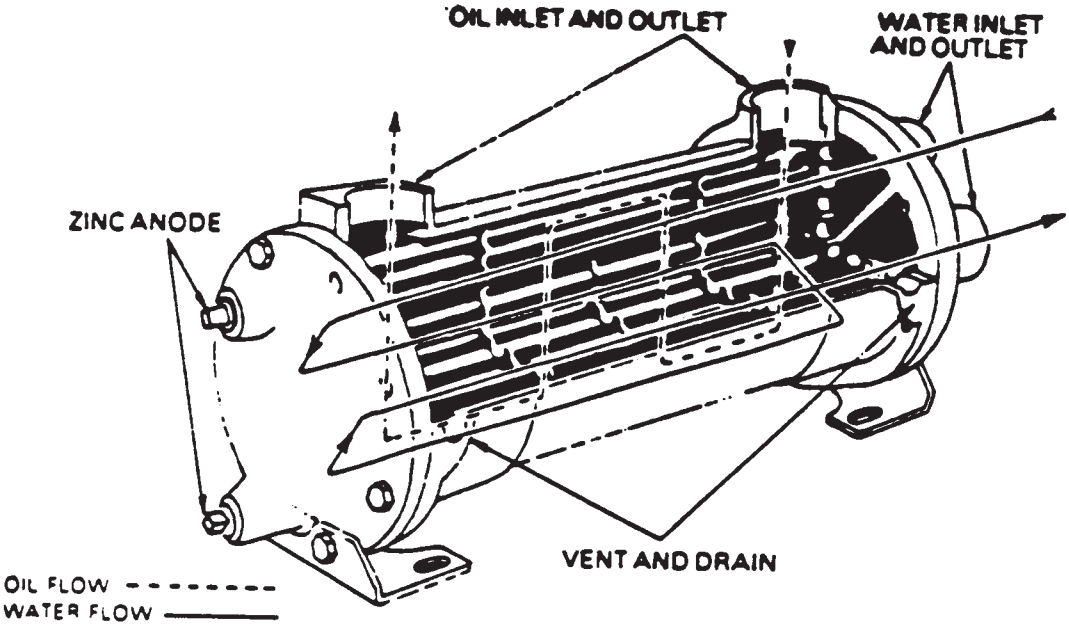
OIL INLET AND OUTLET
WATER INLET AND OUTLET
ZINC ANODE
VENT AND DRAIN
OIL FLOW
WATER FLOW

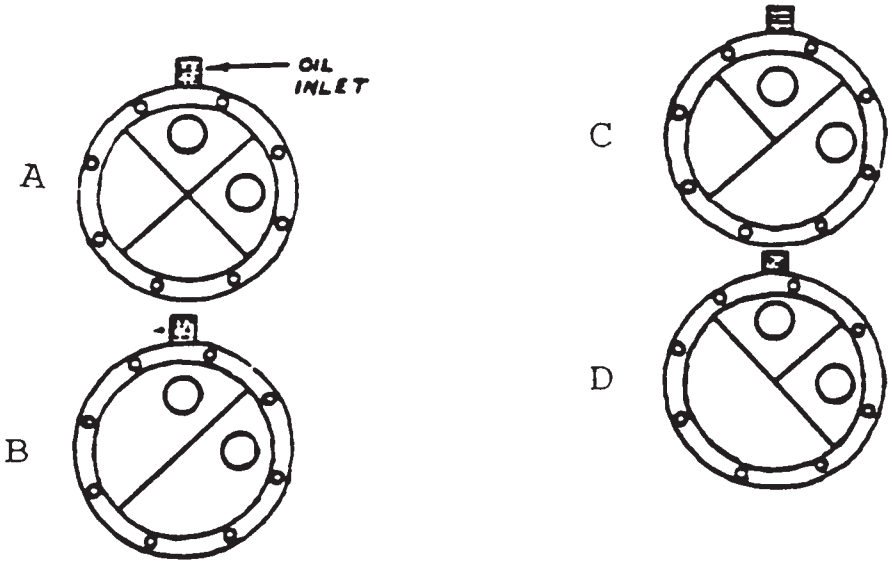
OIL INLET
A
B
C
D

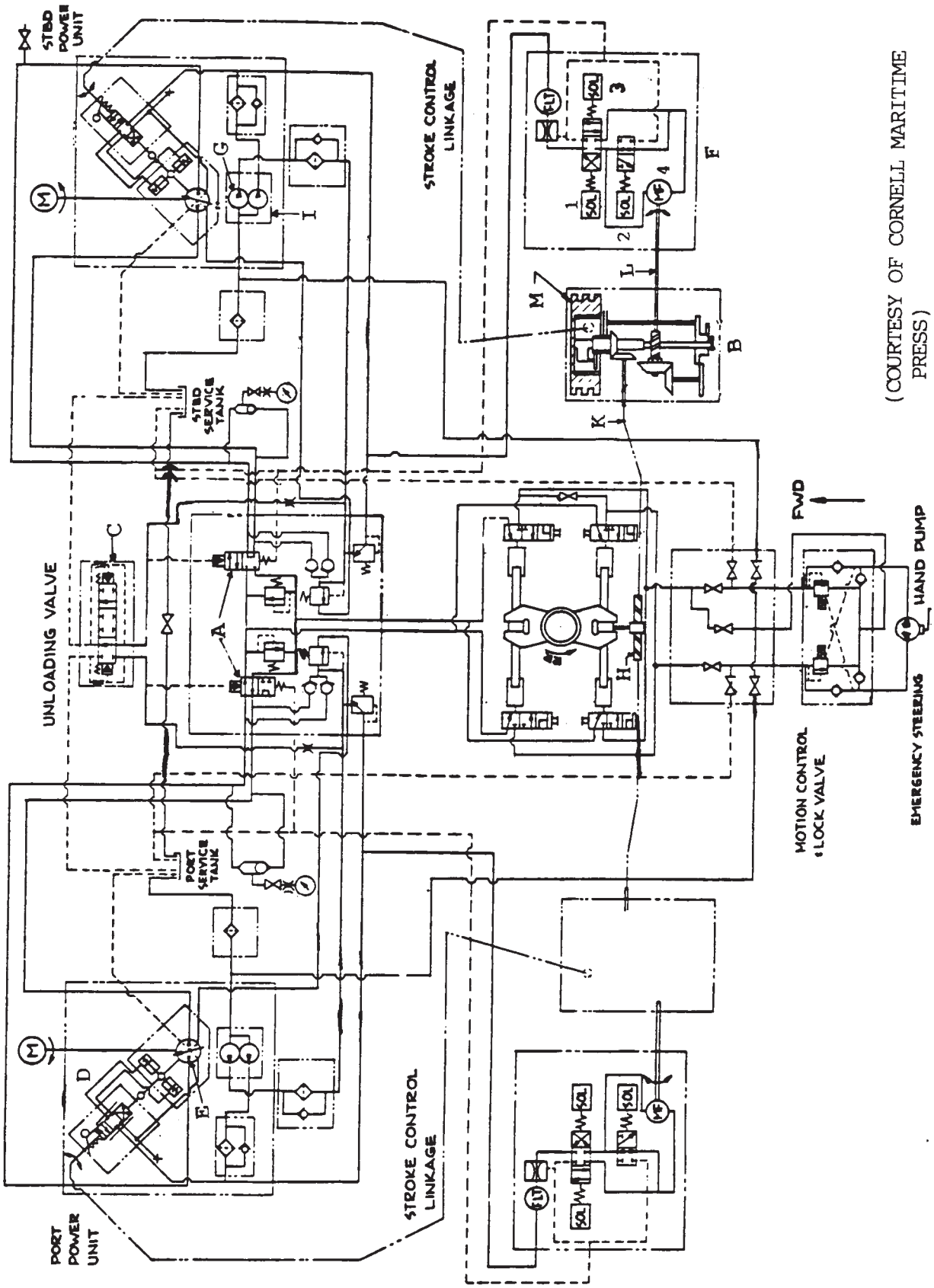

(COURTESY OF CORNELL MARITIME PRESS)

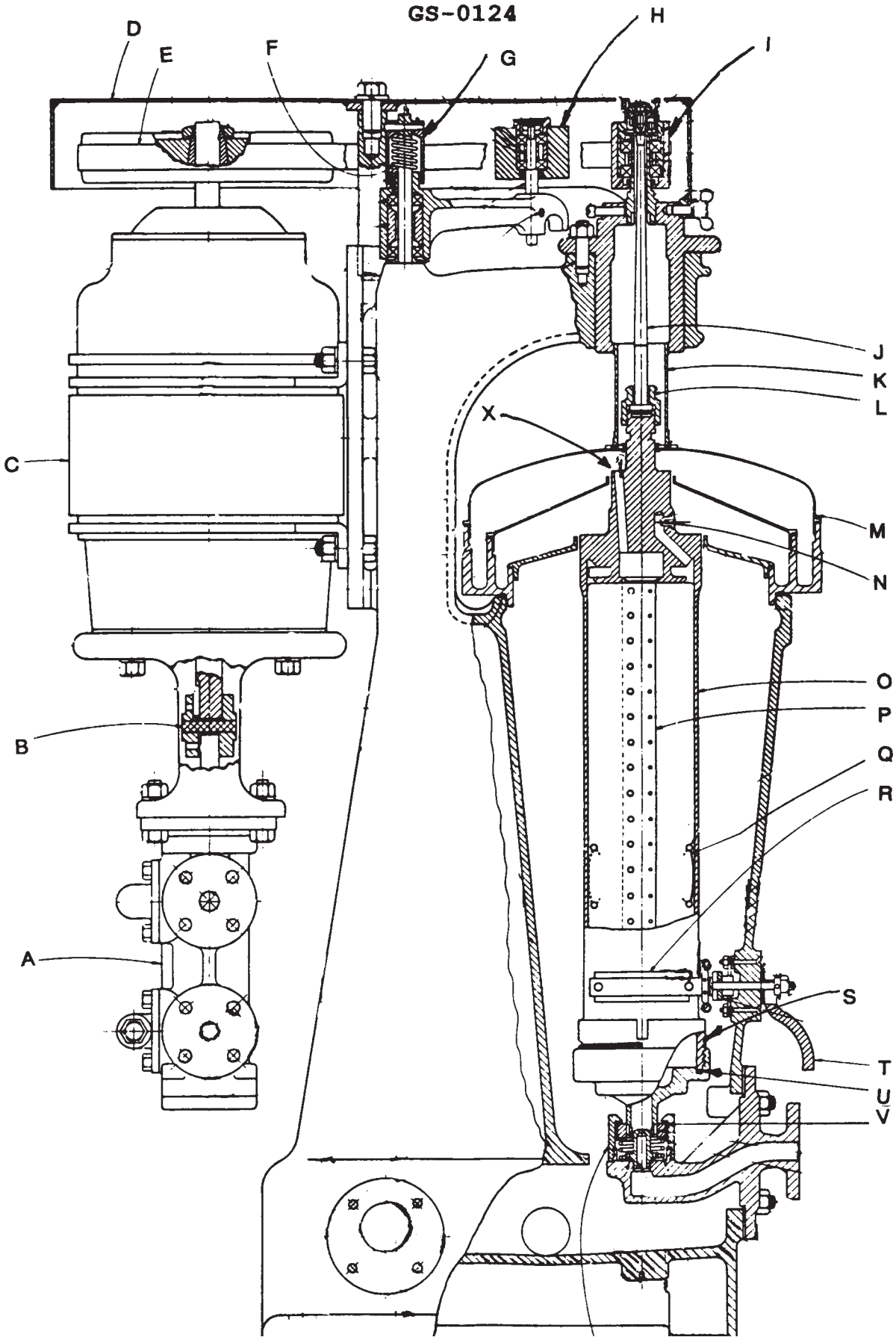
GS-0124
D
E
F
G
H
I
J
K
L
X
C
M
N
O
P
B
Q
R
A
S
T
U
V

GS-0125

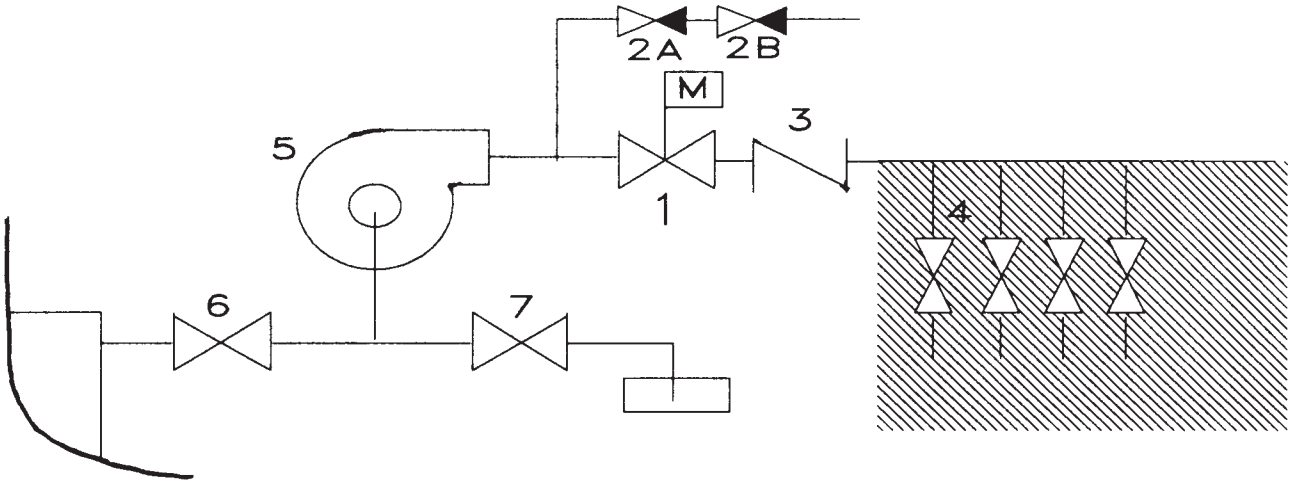

GS-0126

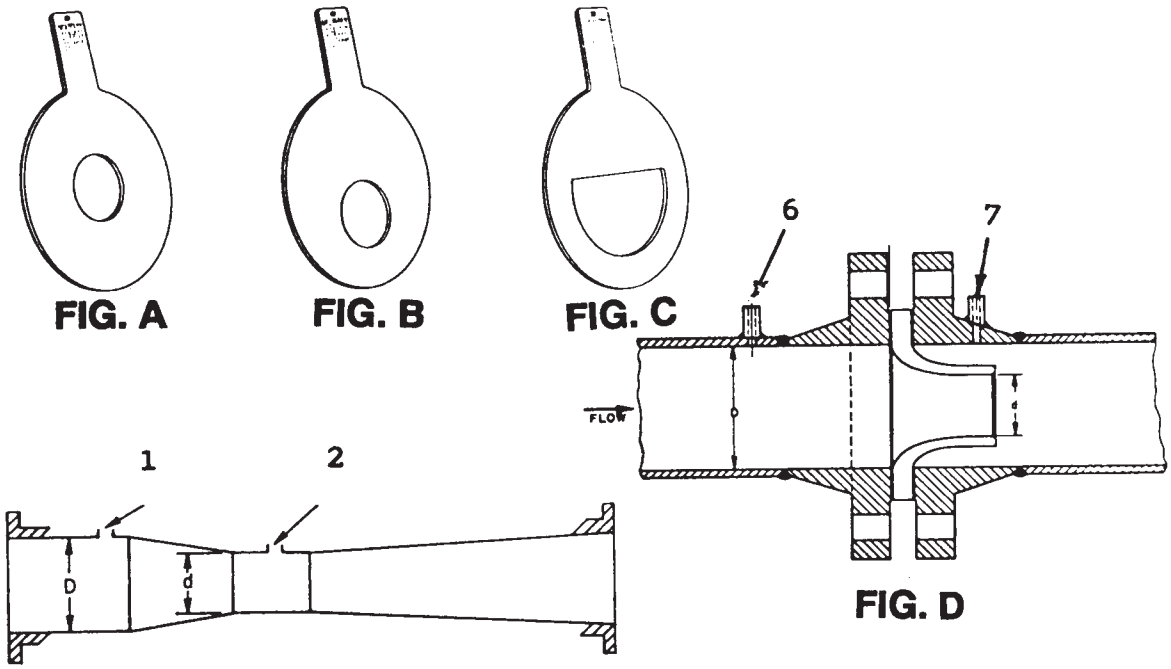

GS-0127

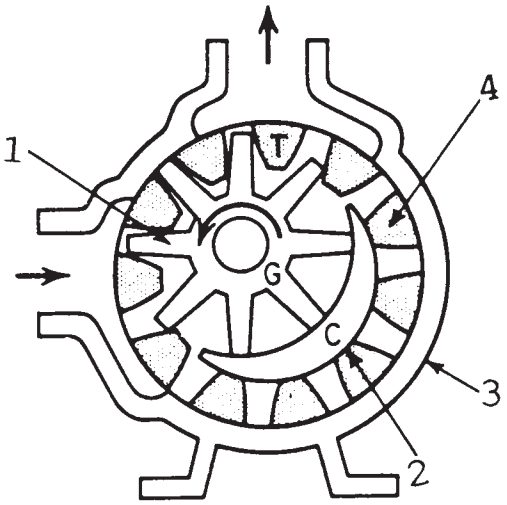

GS-0128

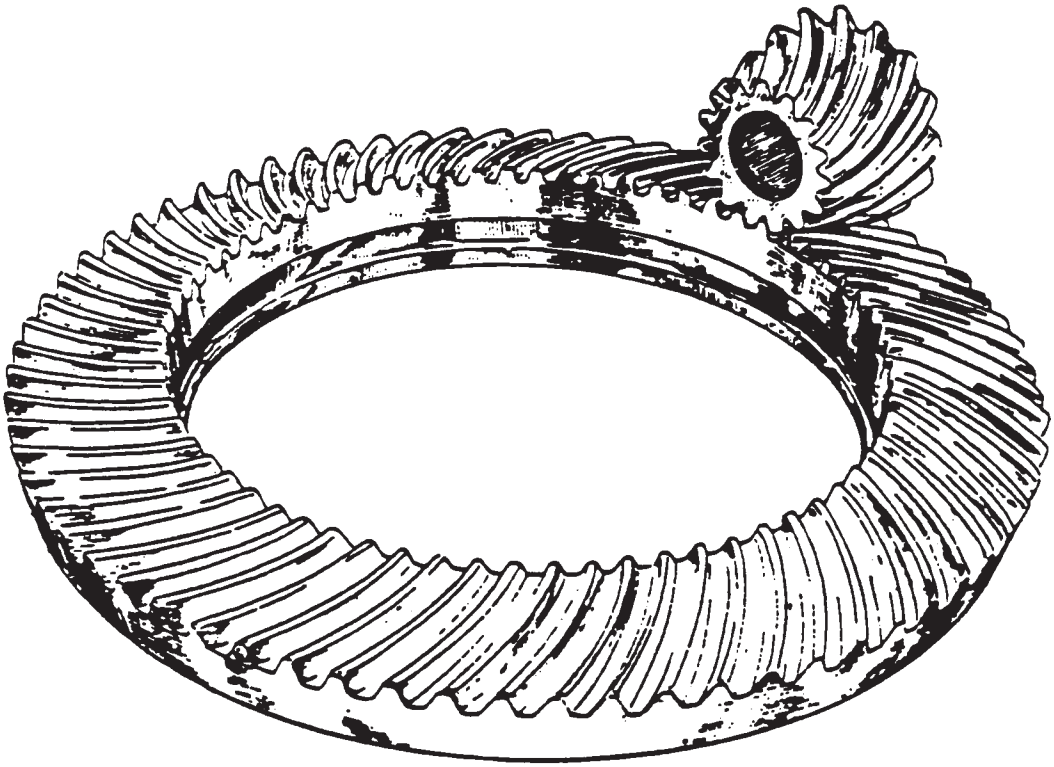

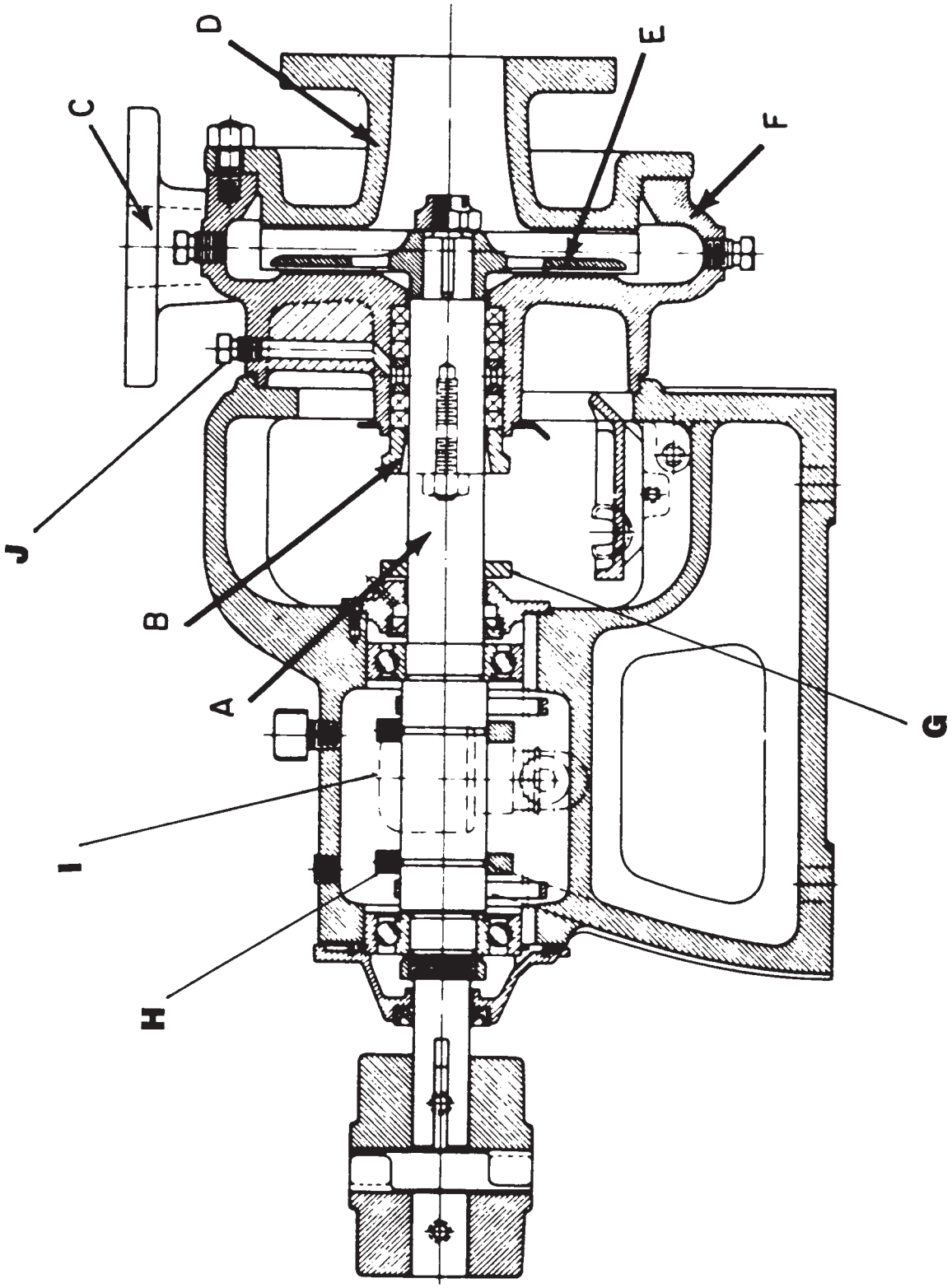
D
C
E
F
J
B
A
G
I
H

GS-0130

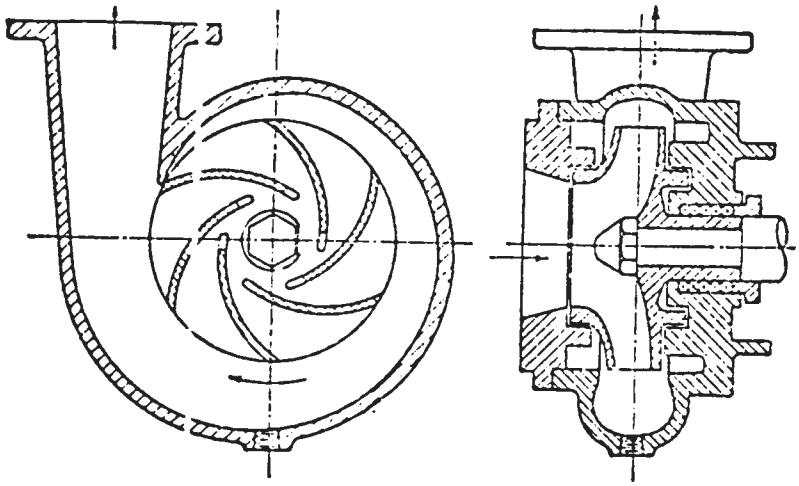

GS-0131

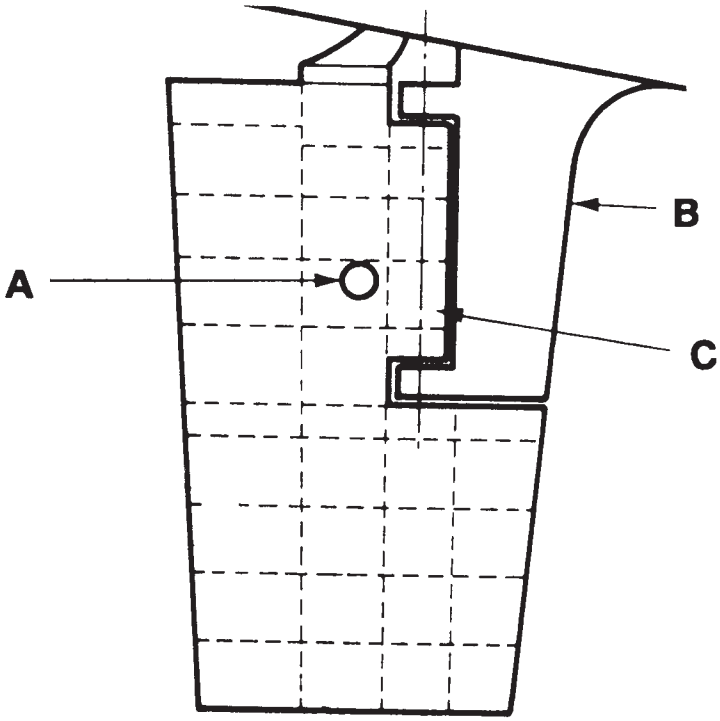

GS-0132

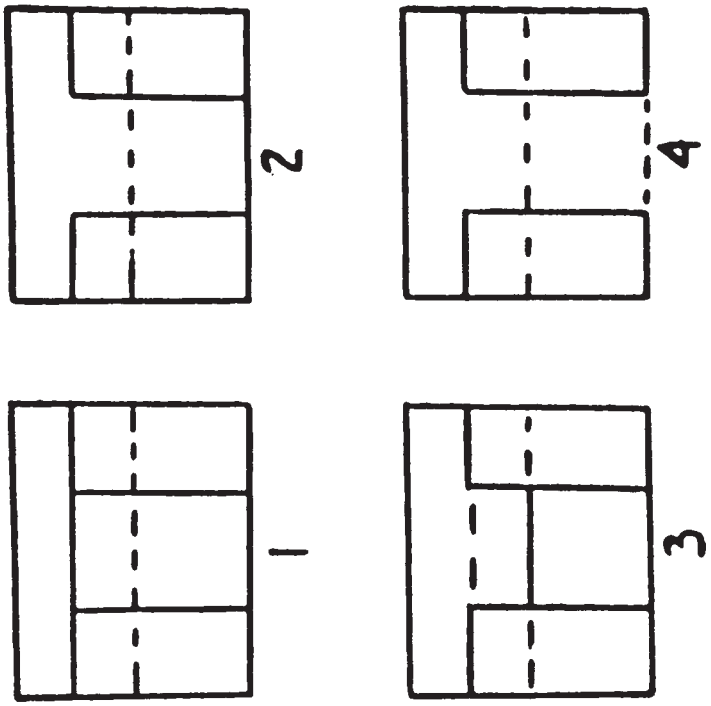

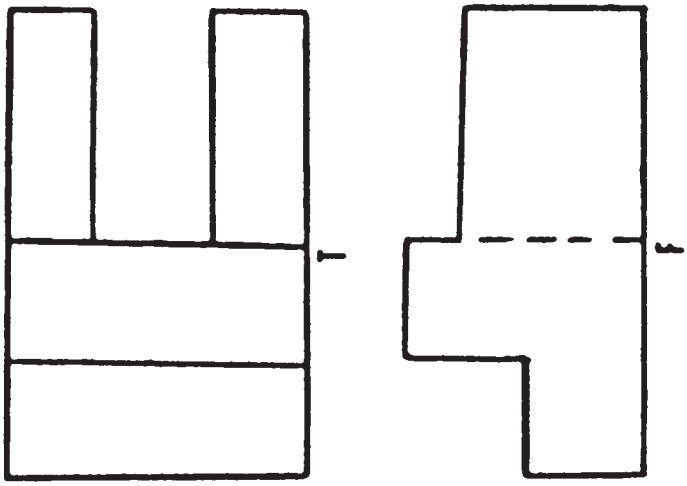
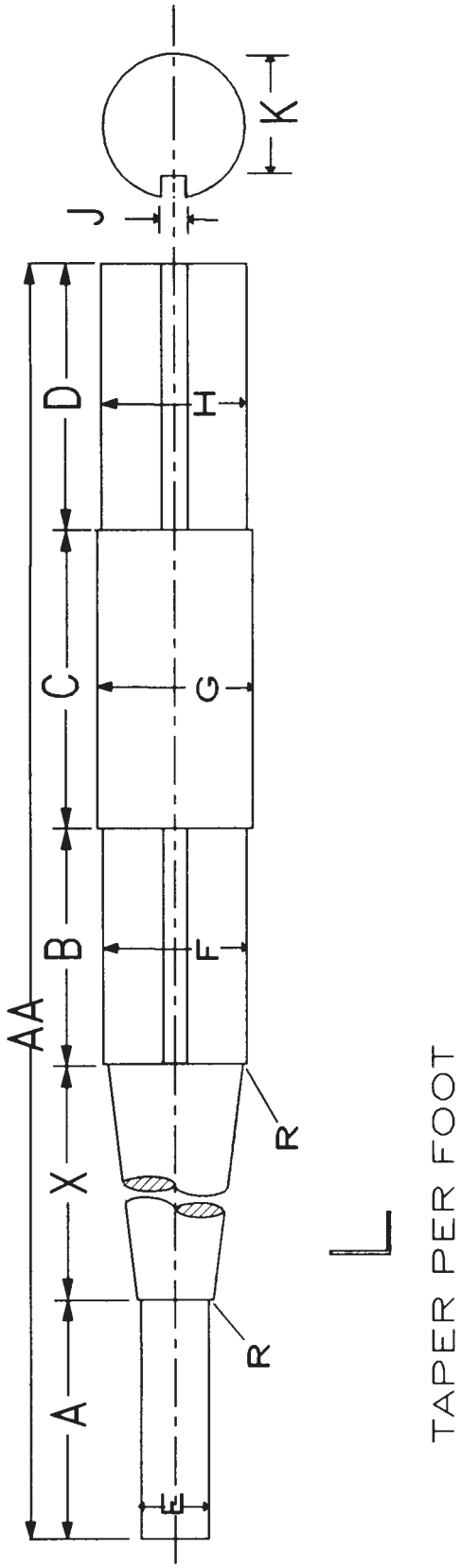
GS-0133