GS-0089

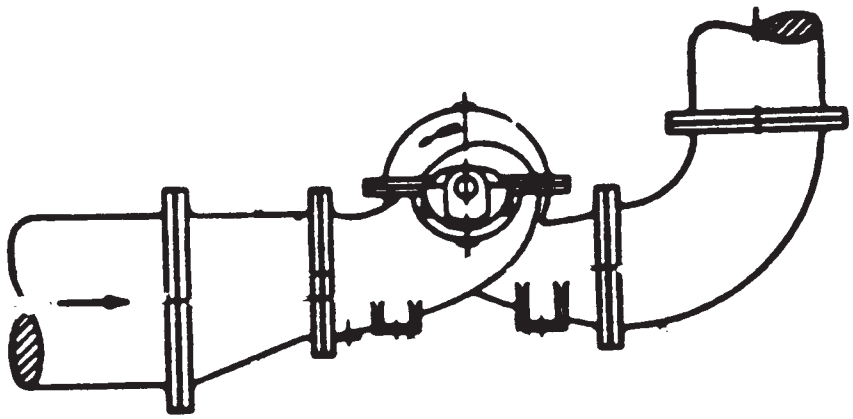

GS-0090

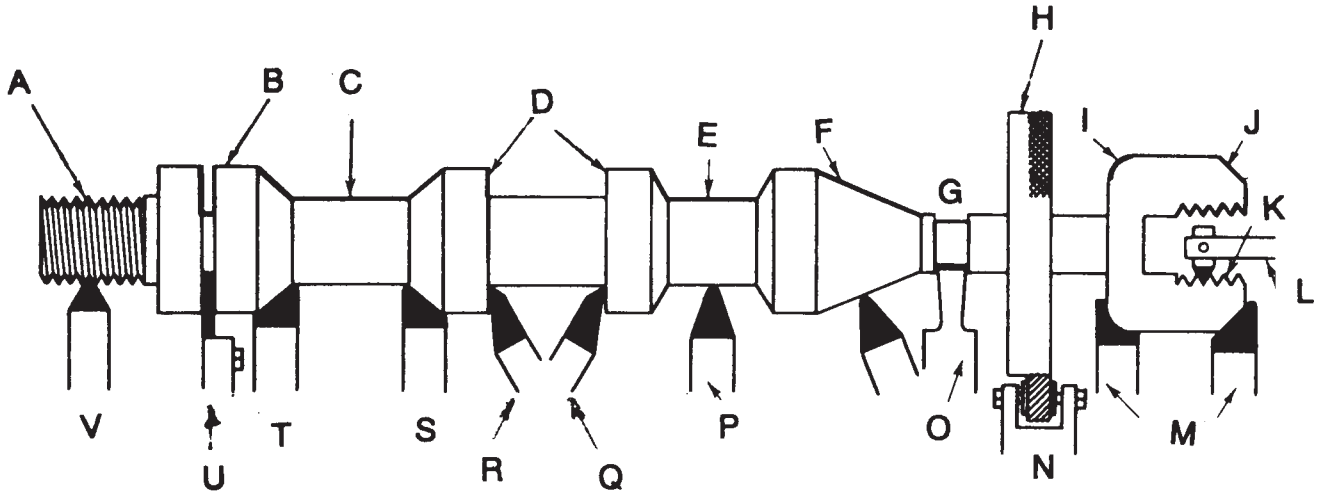

GS-0091

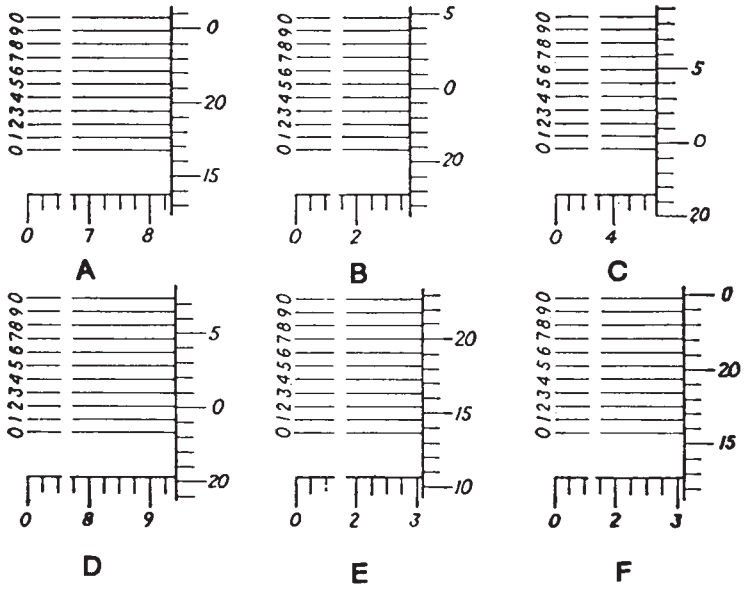

GS-0092

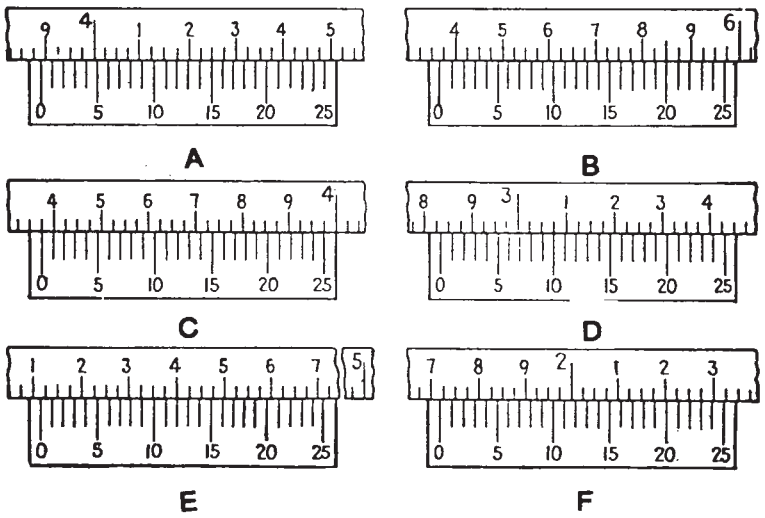

GS-0093

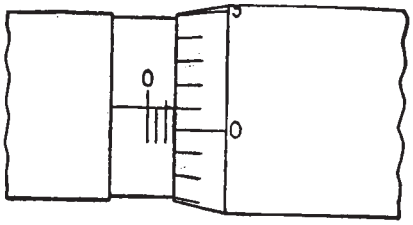

A

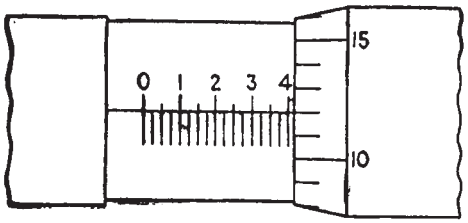

B

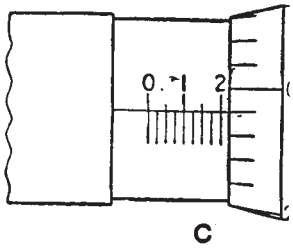

C

GS-0094

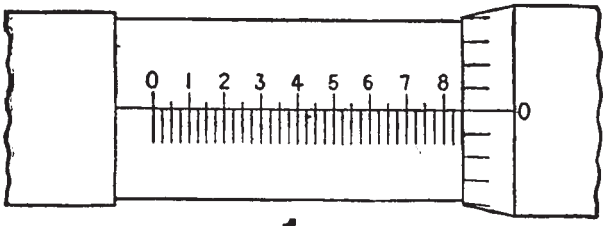

1

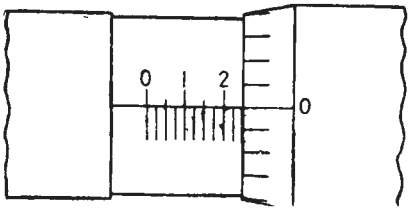

2

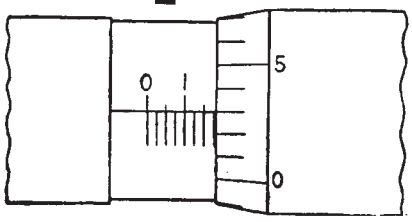

3

GS-0095

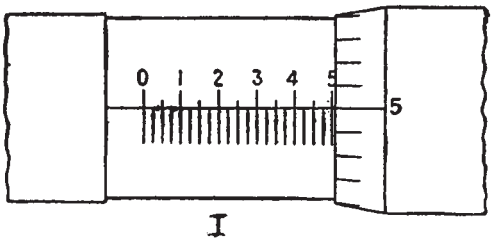

I

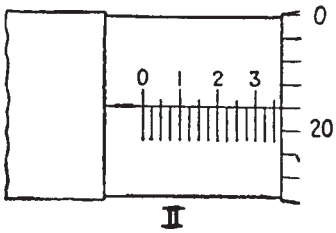

II

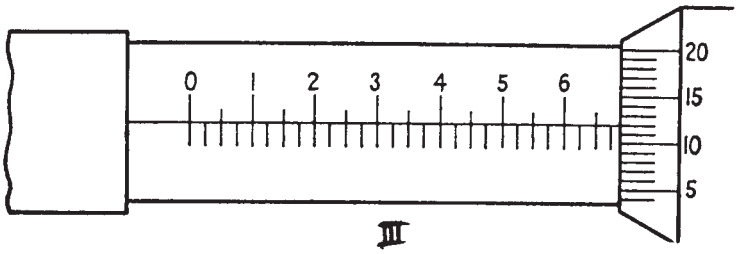

III

GS-0096

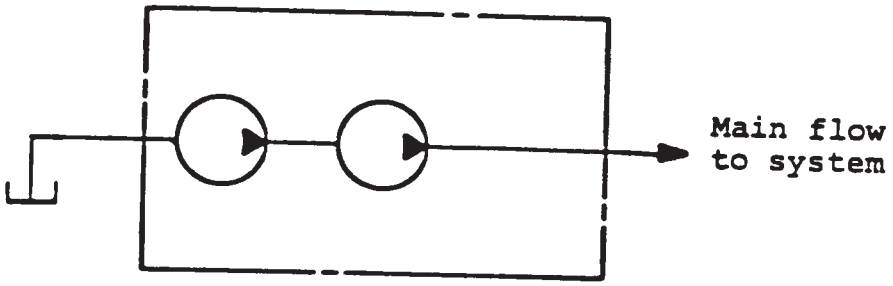

(COURTESY OF CORNELL MARITIME PRESS)

GS-0097

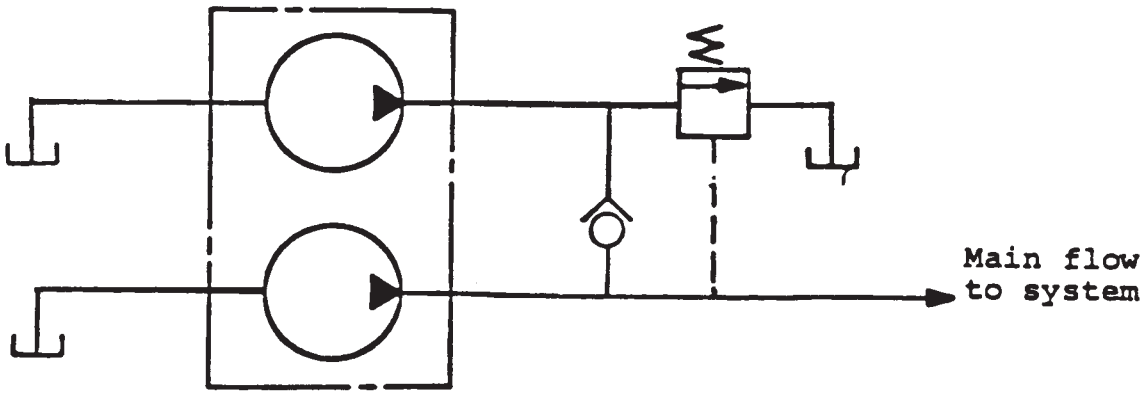

(COURTESY OF CORNELL MARITIME PRESS)

GS-0098

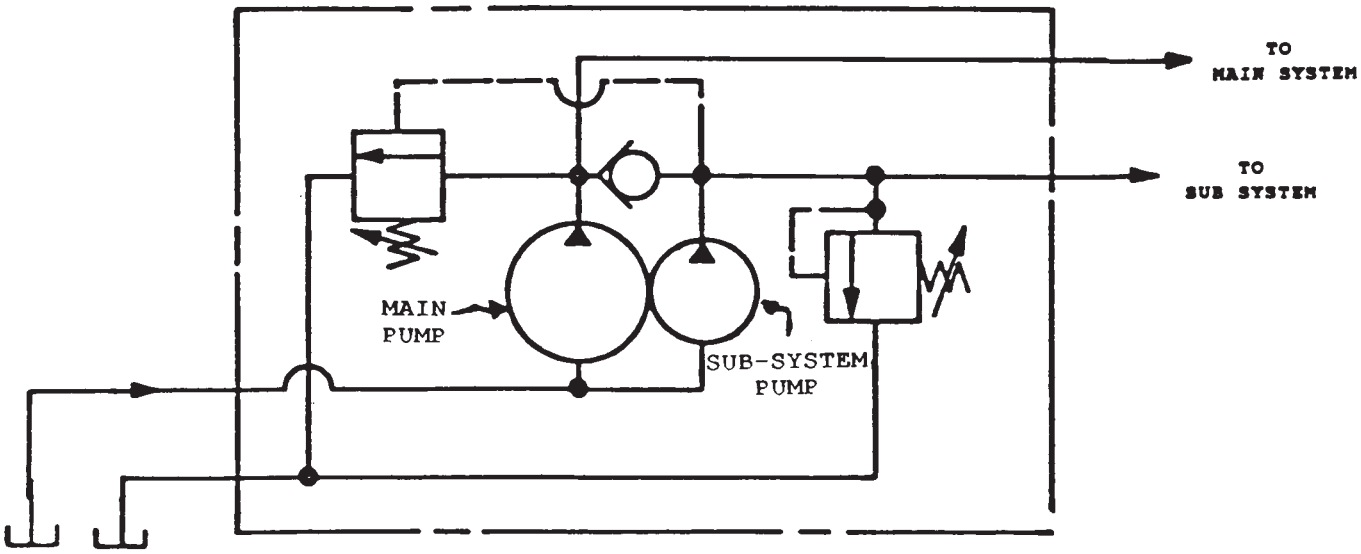

(COURTESY OF CORNELL MARITIME PRESS)

GS-0099

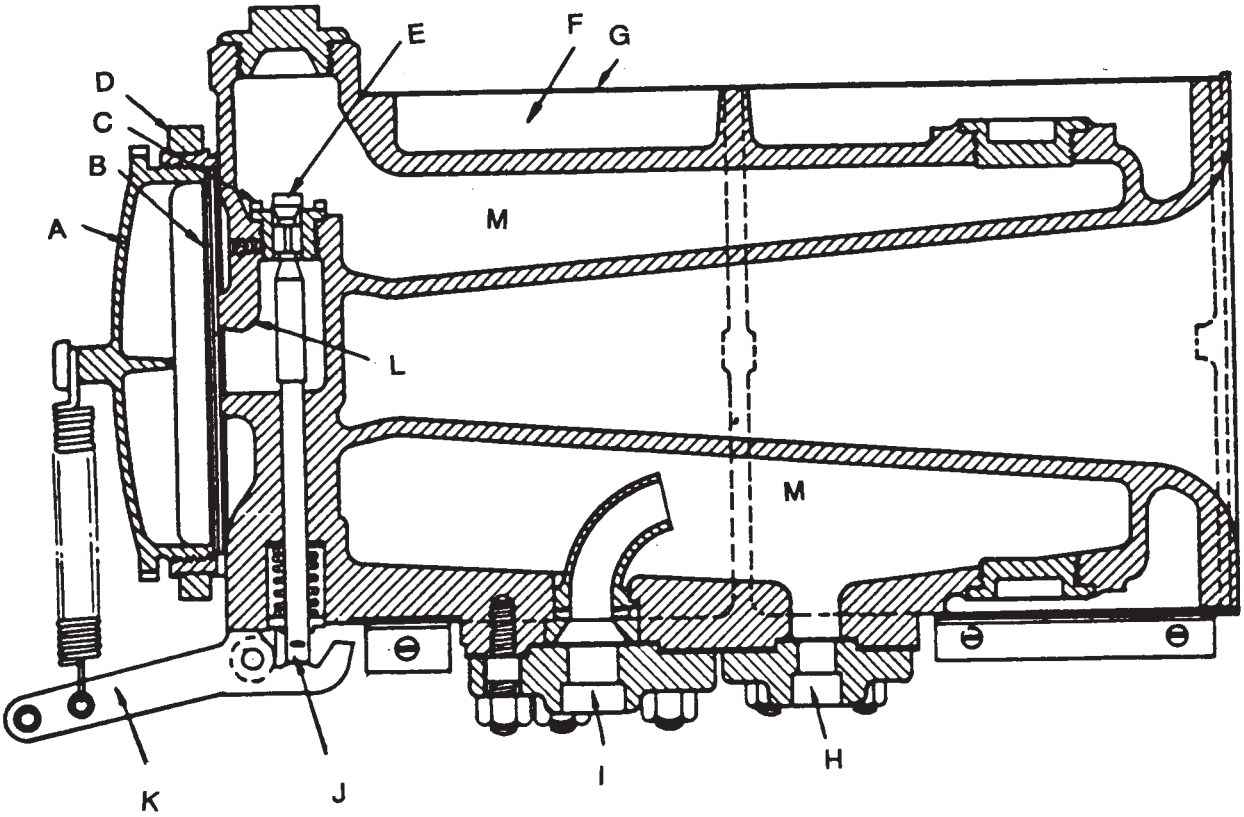

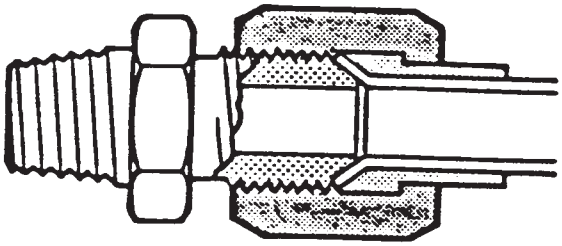

A

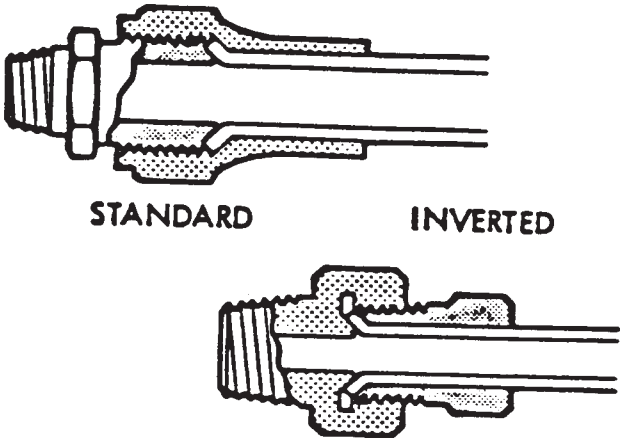

B

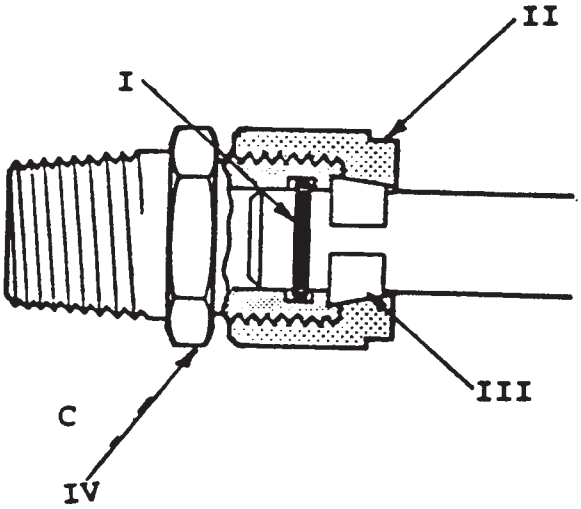

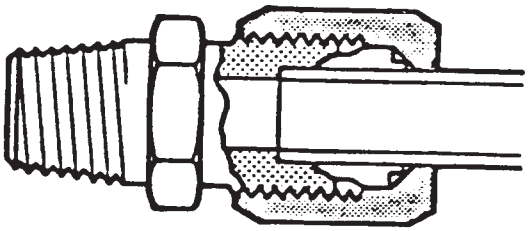

D

(COURTESY OF CORNELL MARITIME PRESS)

GS-0101

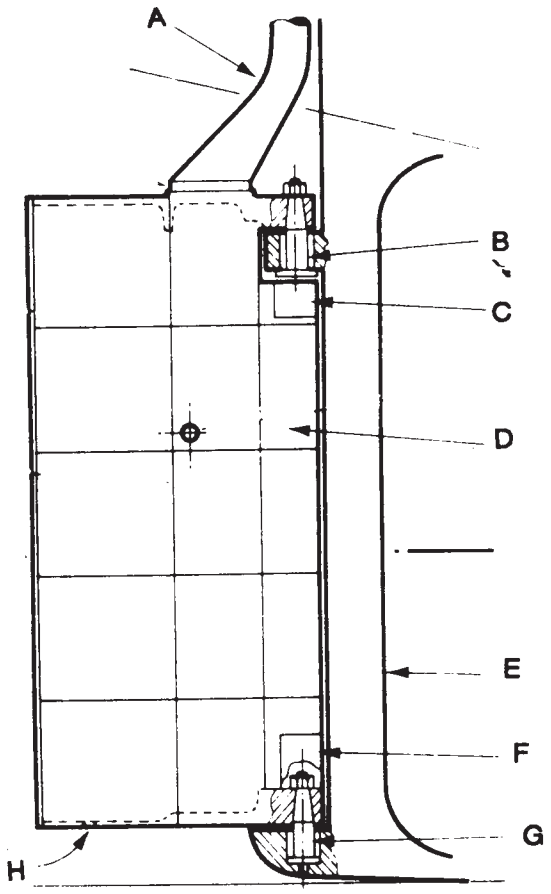

GS-0102

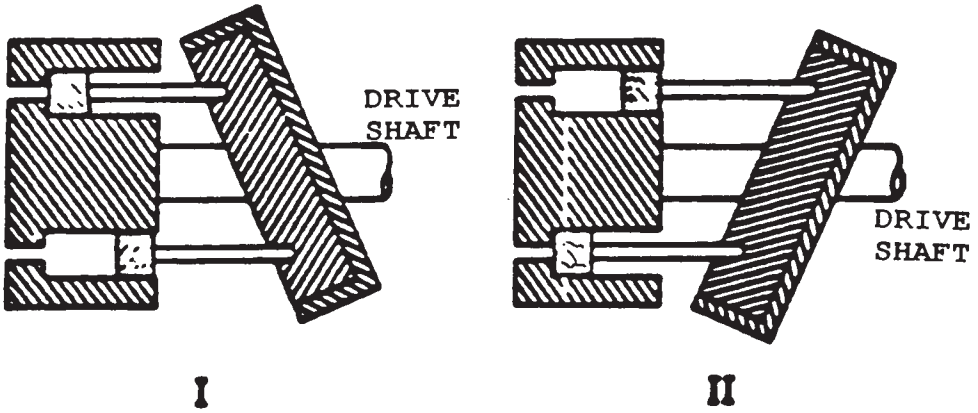

GS-0103

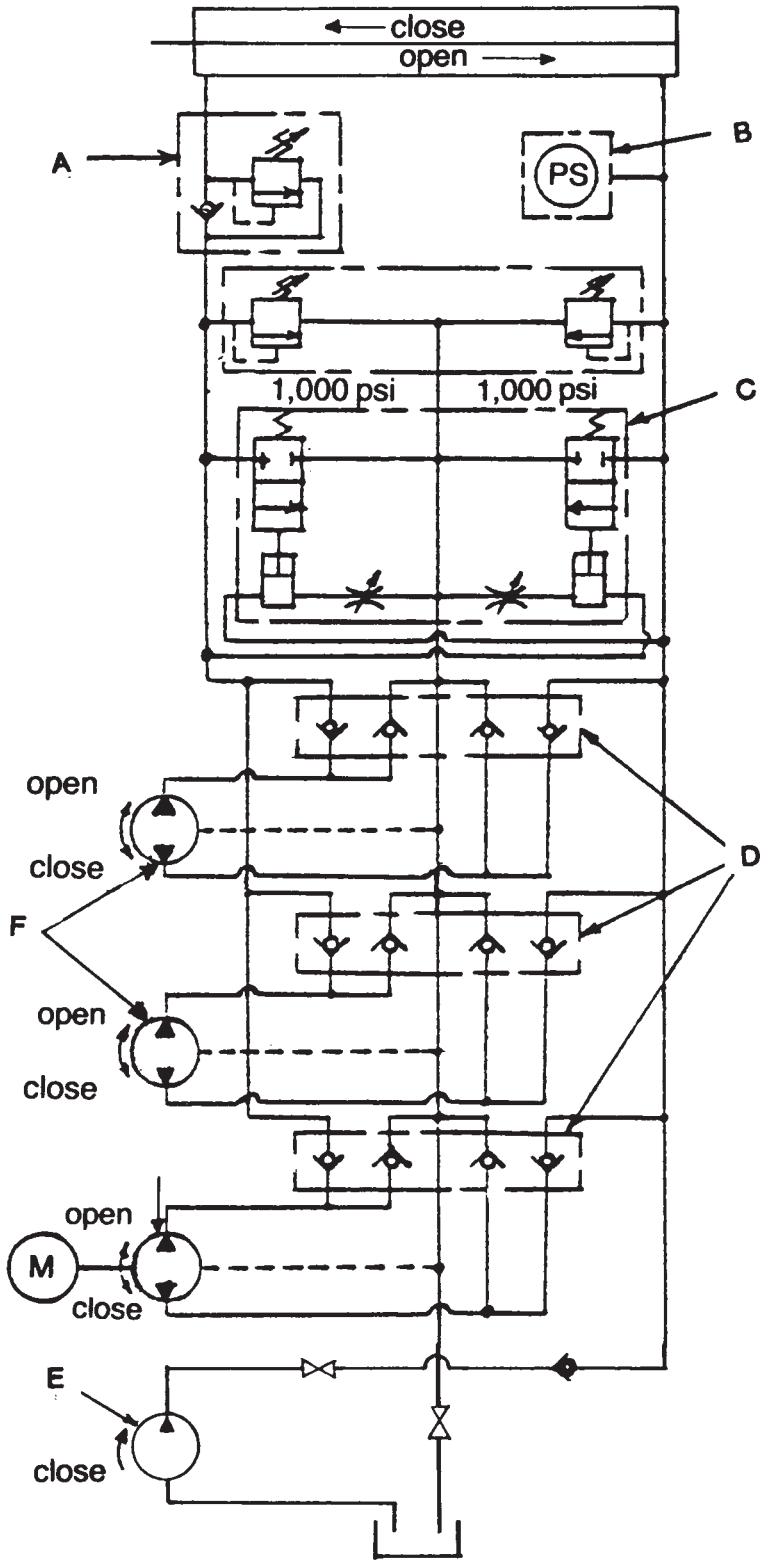
close
open
A
B
PS
1,000 psi
1,000 psi
C
open
close
D
F
open
close
open
M
close
E
close

GS-0104

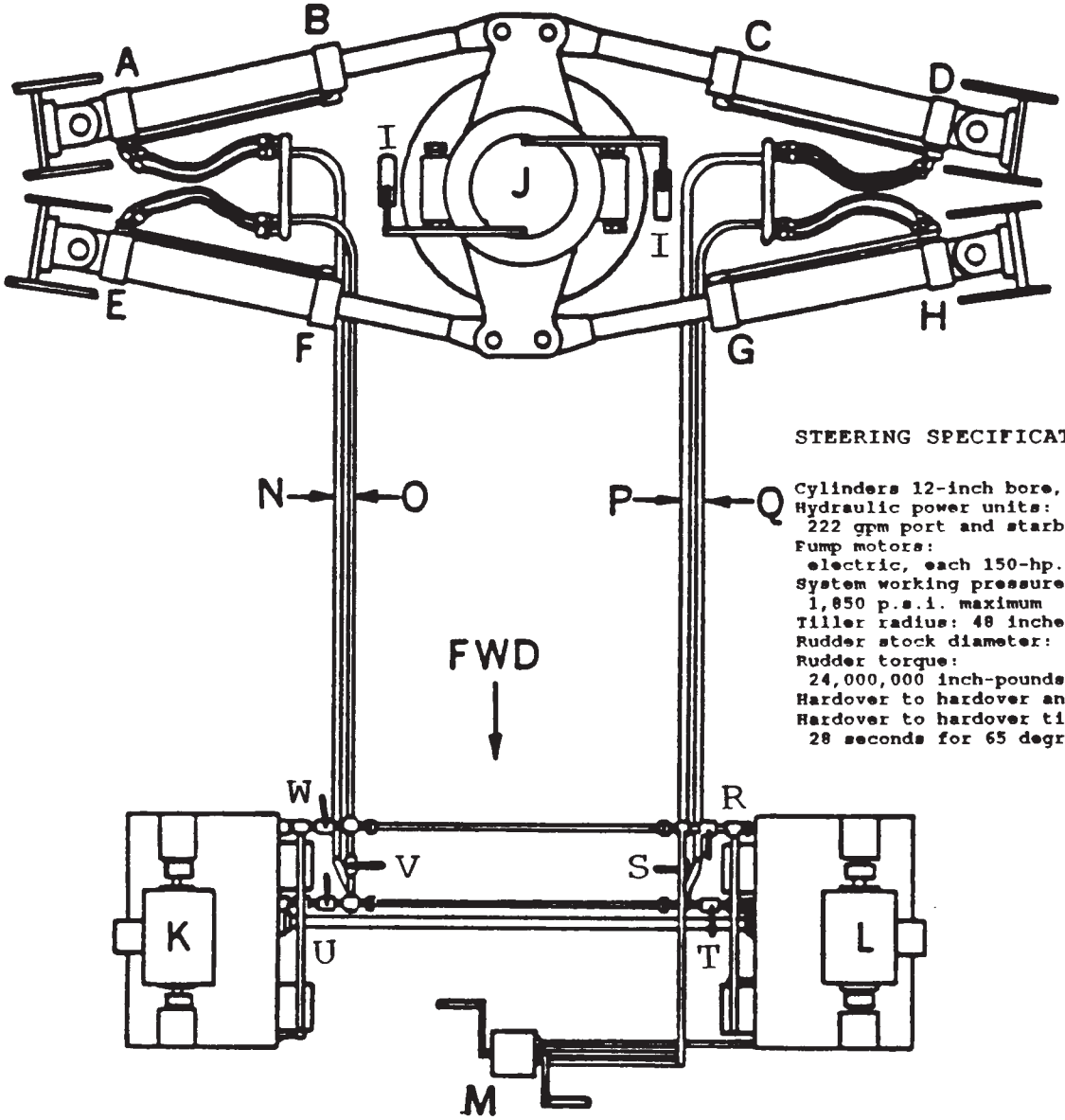

STEERING SPECIFICATION

Cylinders 12-inch bore, 65-inch stroke
Hydraulic power units:
222 gpm port and starboard units
Pump motors:
electric, each 150-hp., 1,800 r.p.m.
System working pressure:
1,850 p.s.i. maximum
Tiller radius: 48 inches
Rudder stock diameter: 30.2 inches
Rudder torque:
24,000,000 inch-pounds maximum
Hardover to hardover angle: 70 degrees
Hardover to hardover time:
28 seconds for 65 degrees

GS-0105

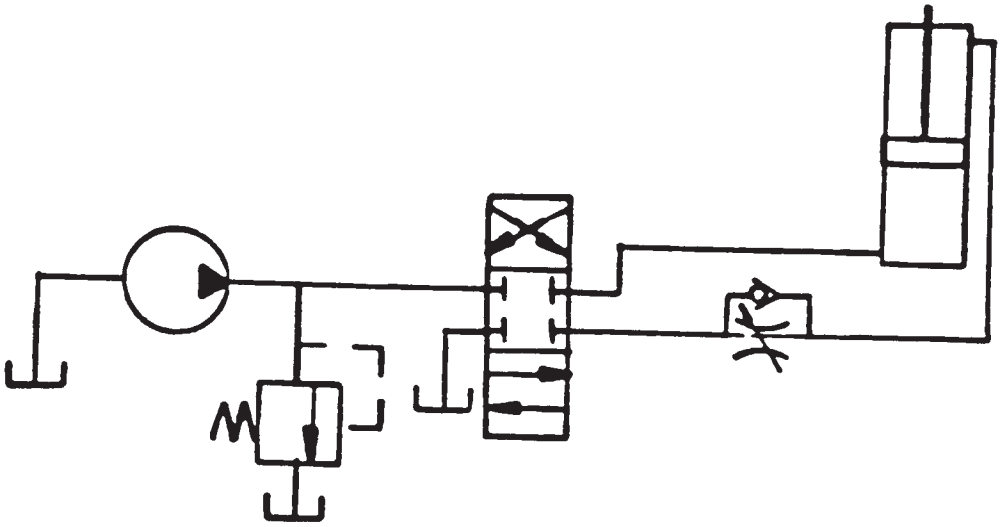

GS-0106

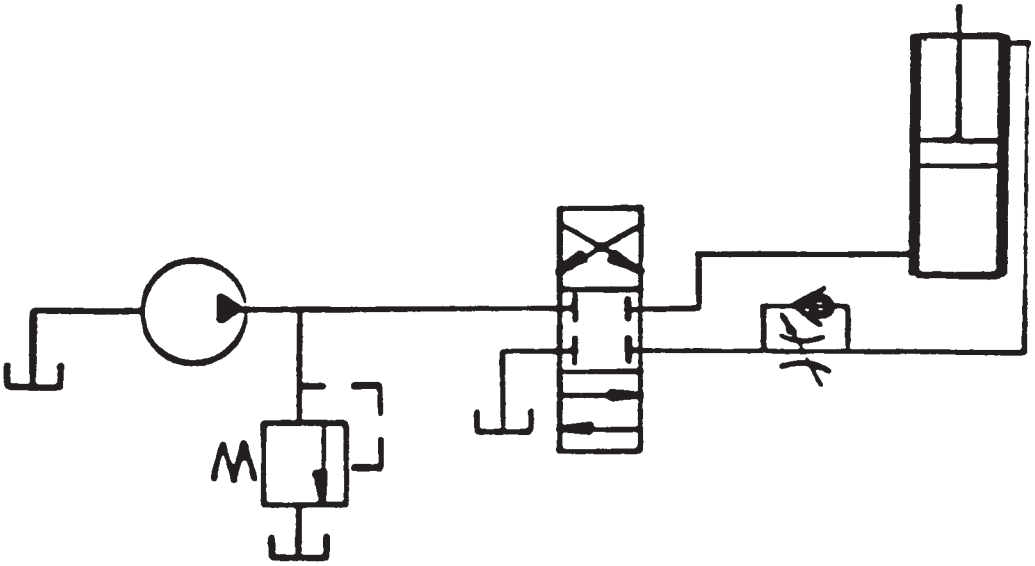

GS-0107

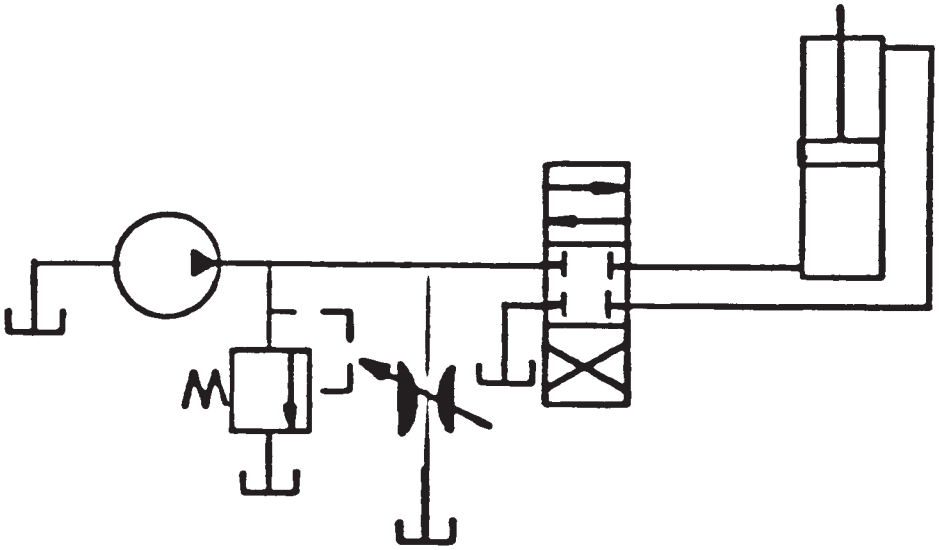

GS-0108

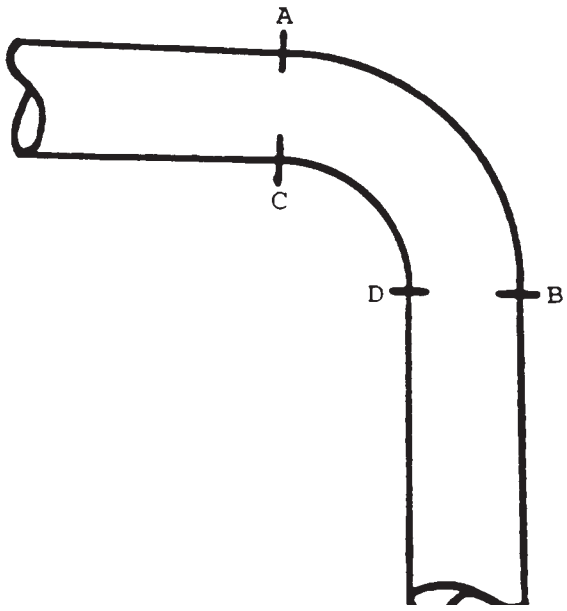

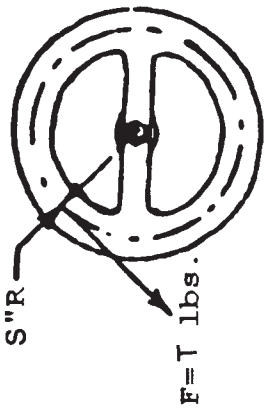

Figure I

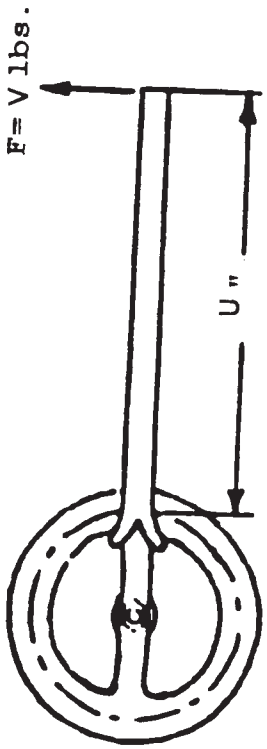

Figure II

GS-0110

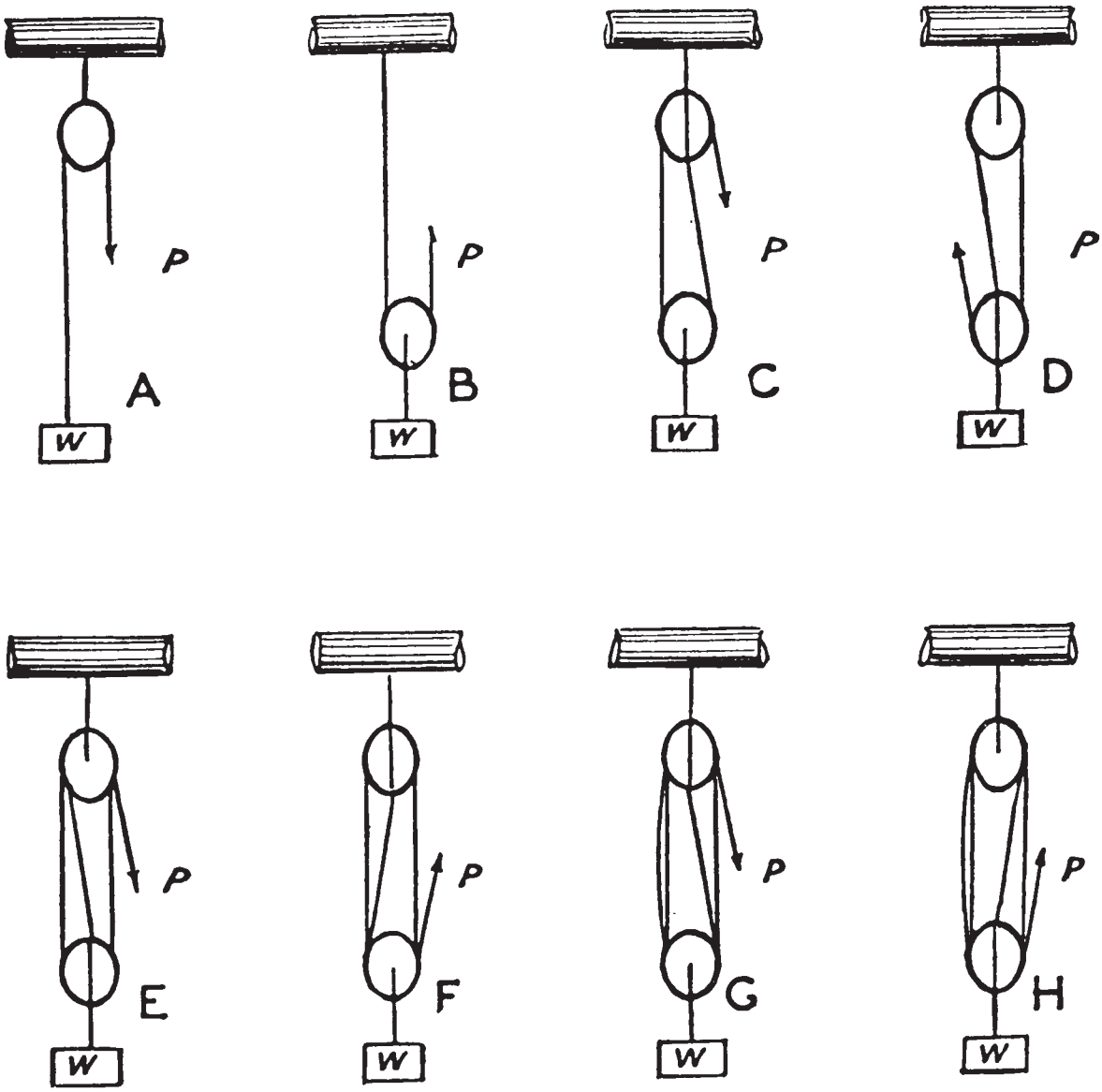

GS-0111

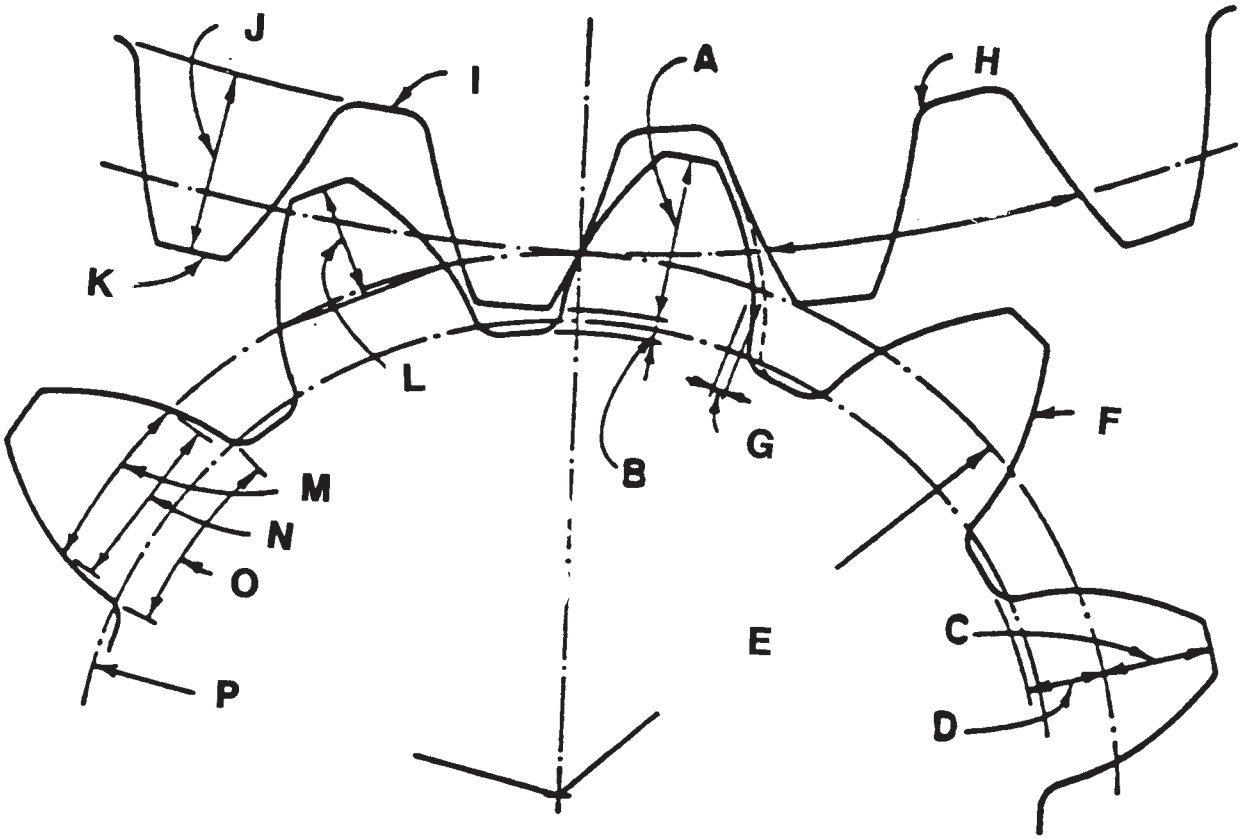

GS-0112

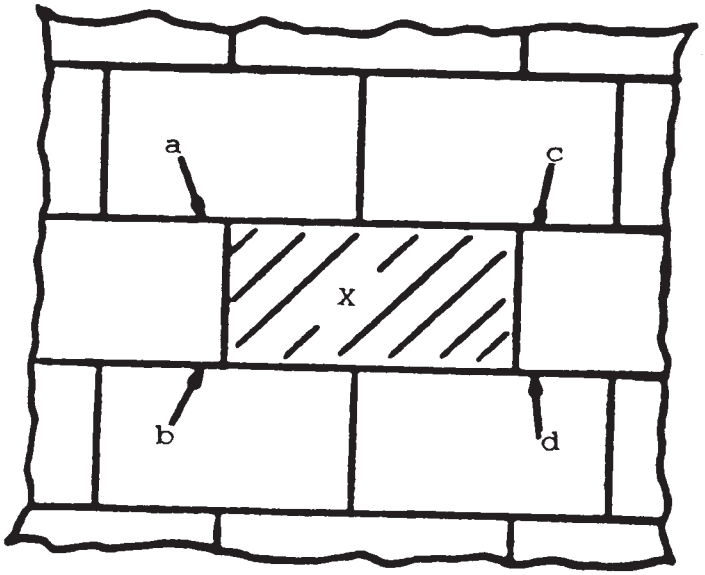

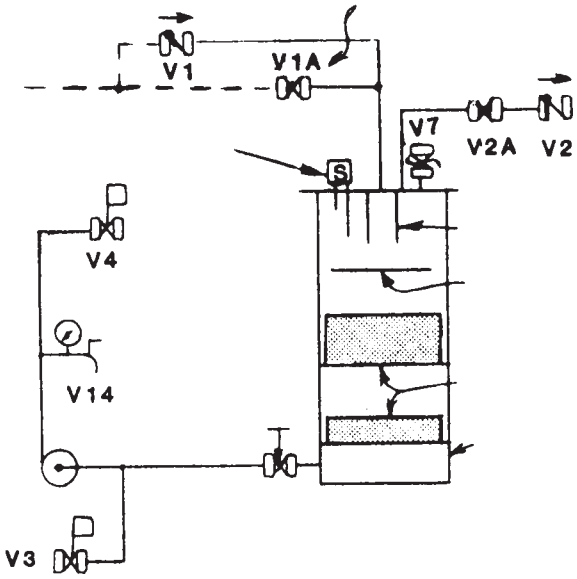

FIG. A

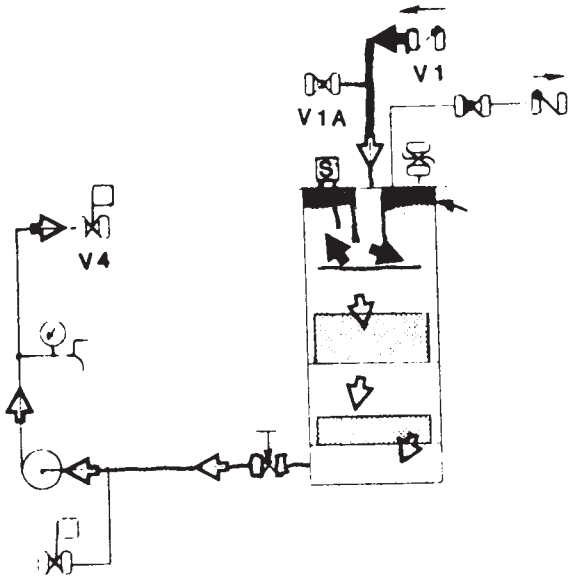

FIG. B

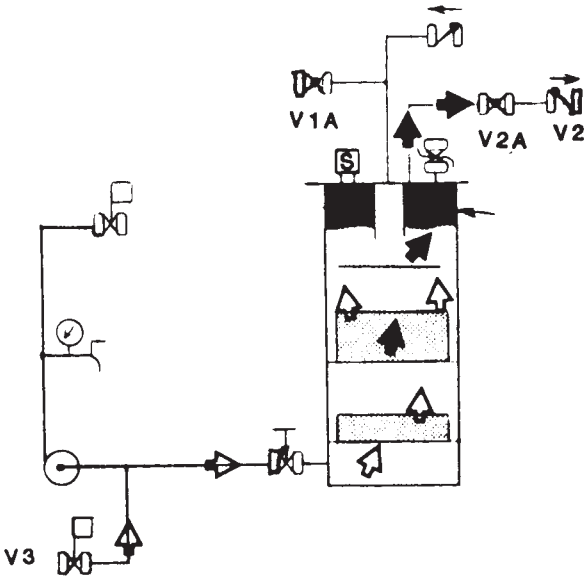

FIG. C

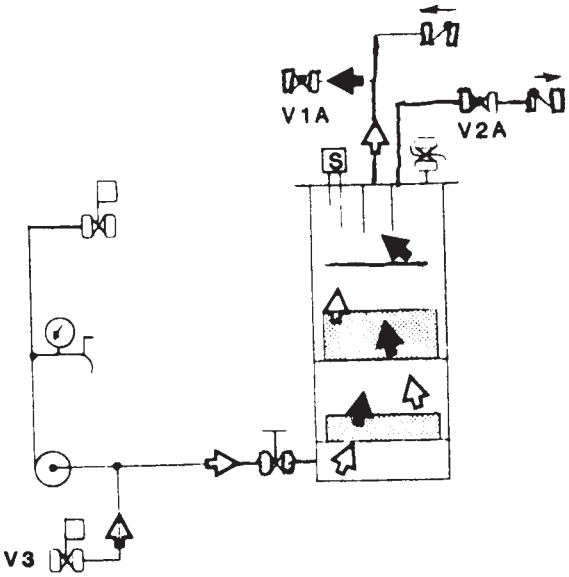

FIG. D

OIL