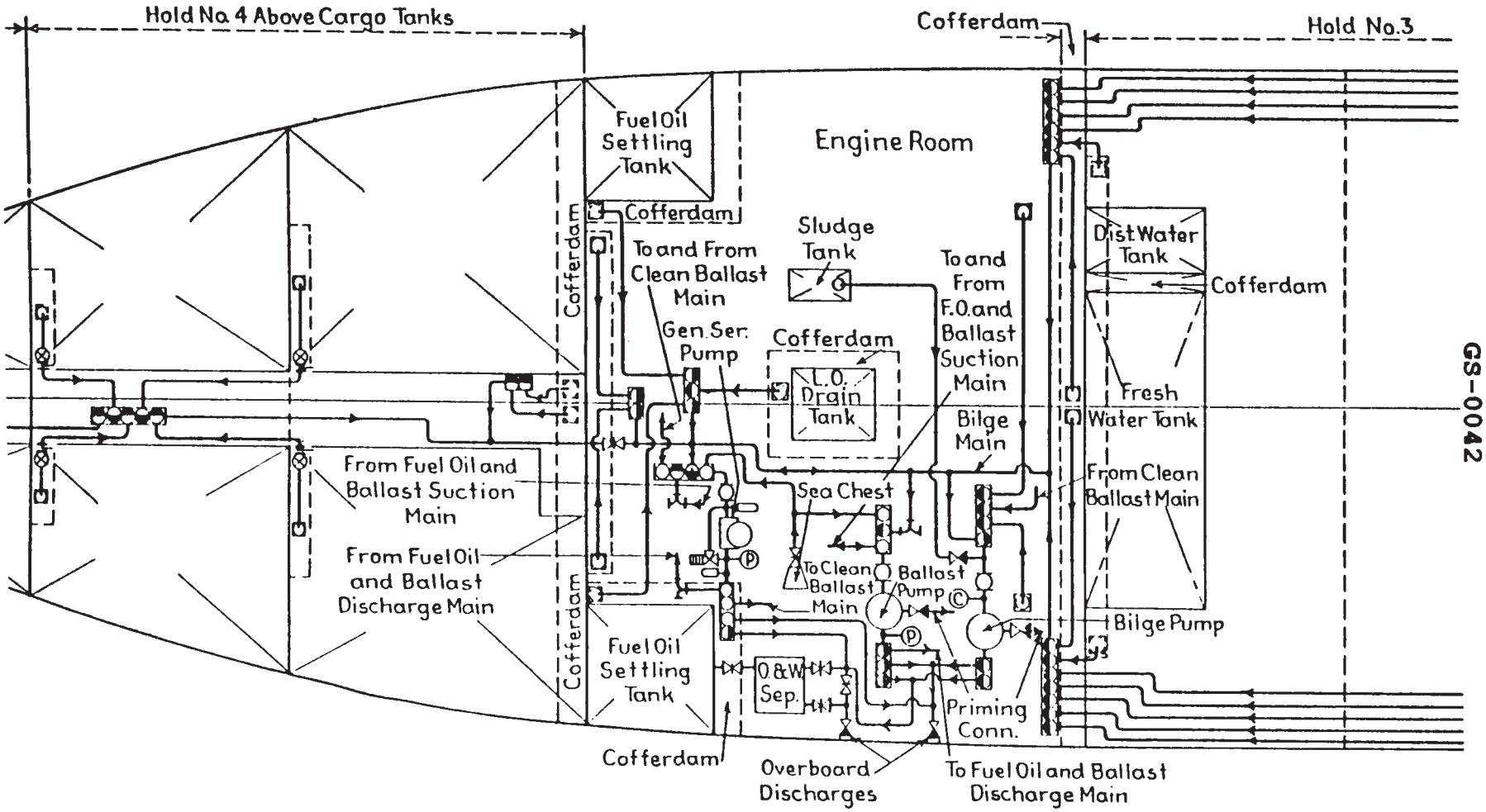
Hold No. 4 Above Cargo Tanks
Cofferdam
Hold No.3
Fuel Oil Settling Tank
Engine Room
Cofferdam
Cofferdam
Sludge Tank
To and From Clean Ballast Main
Dist. Water Tank
Cofferdam
To and From F.O. and Ballast Suction Main
Gen. Ser. Pump
Cofferdam
L.O. Drain Tank
Fresh Water Tank
Bilge Main
From Fuel Oil and Ballast Suction Main
Sea Chest
From Clean Ballast Main
From Fuel Oil and Ballast Discharge Main
To Clean Ballast Main
Ballast Pump
Bilge Pump
Cofferdam
Fuel Oil Settling Tank
O & W Sep.
Priming Conn.
Cofferdam
Overboard Discharges
To Fuel Oil and Ballast Discharge Main

GS-0042

GS-0043

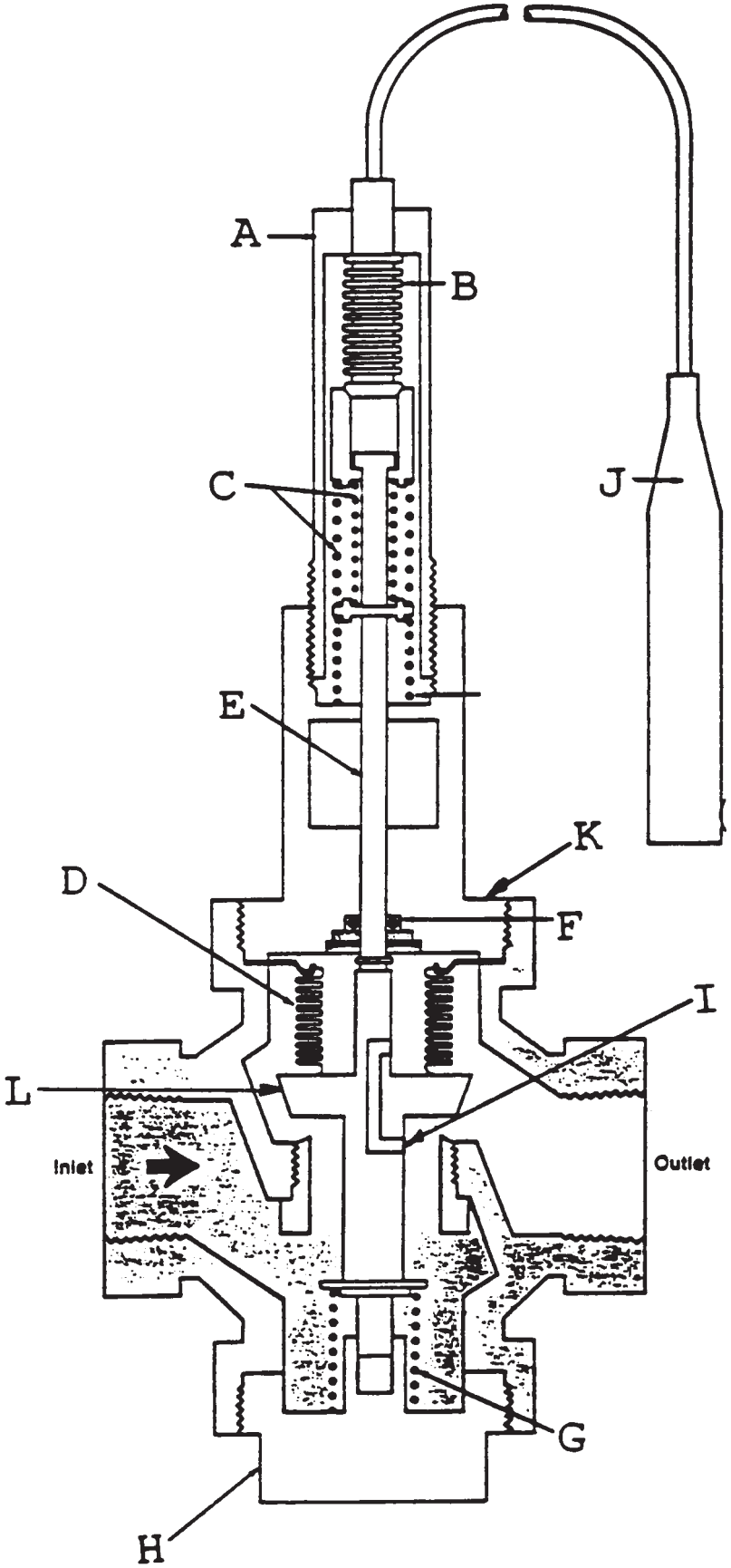

GS-0044

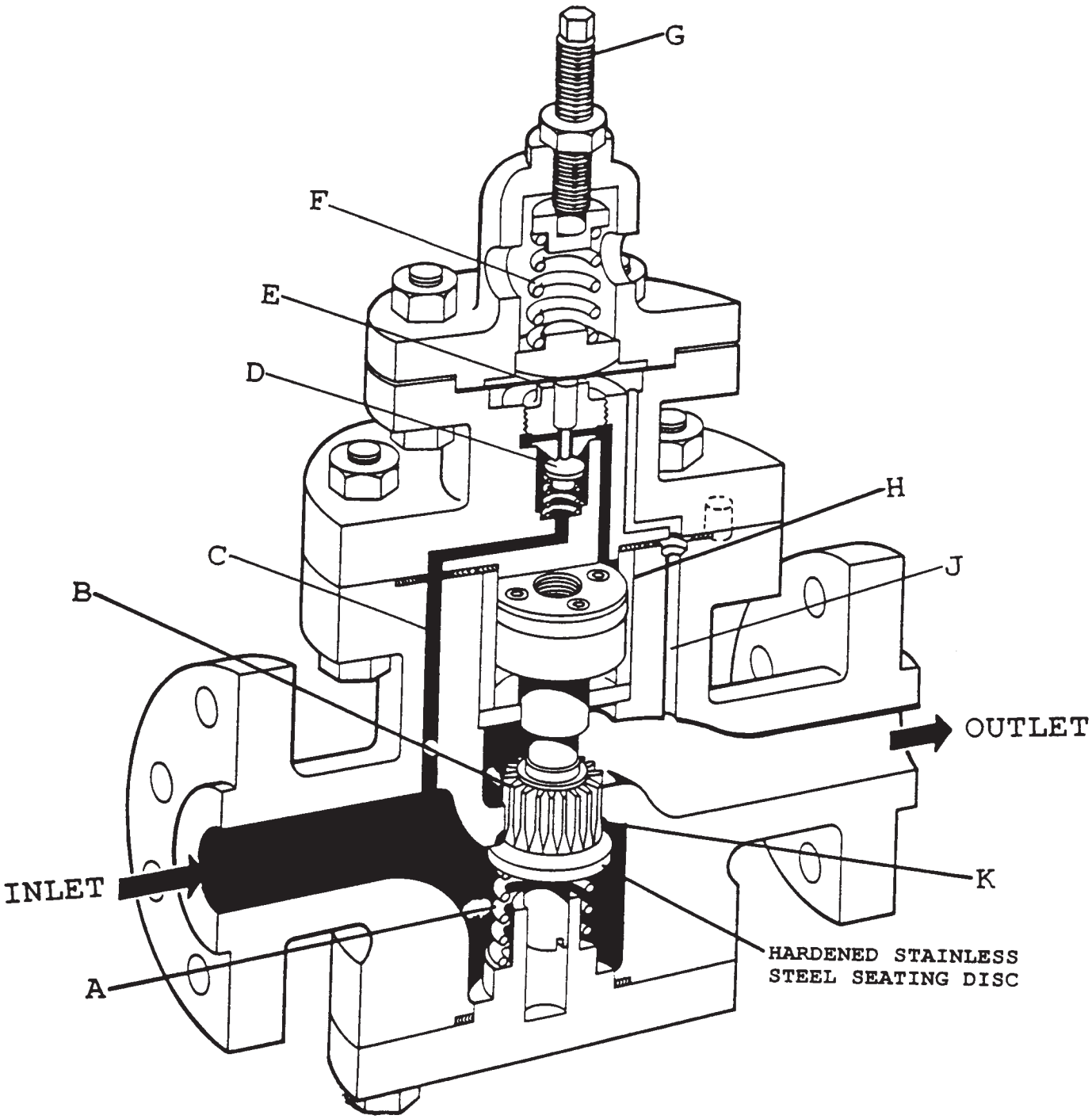
G
F
E
D
H
C
J
B
OUTLET
INLET
K
HARDENED STAINLESS
STEEL SEATING DISC
A

GS-0045

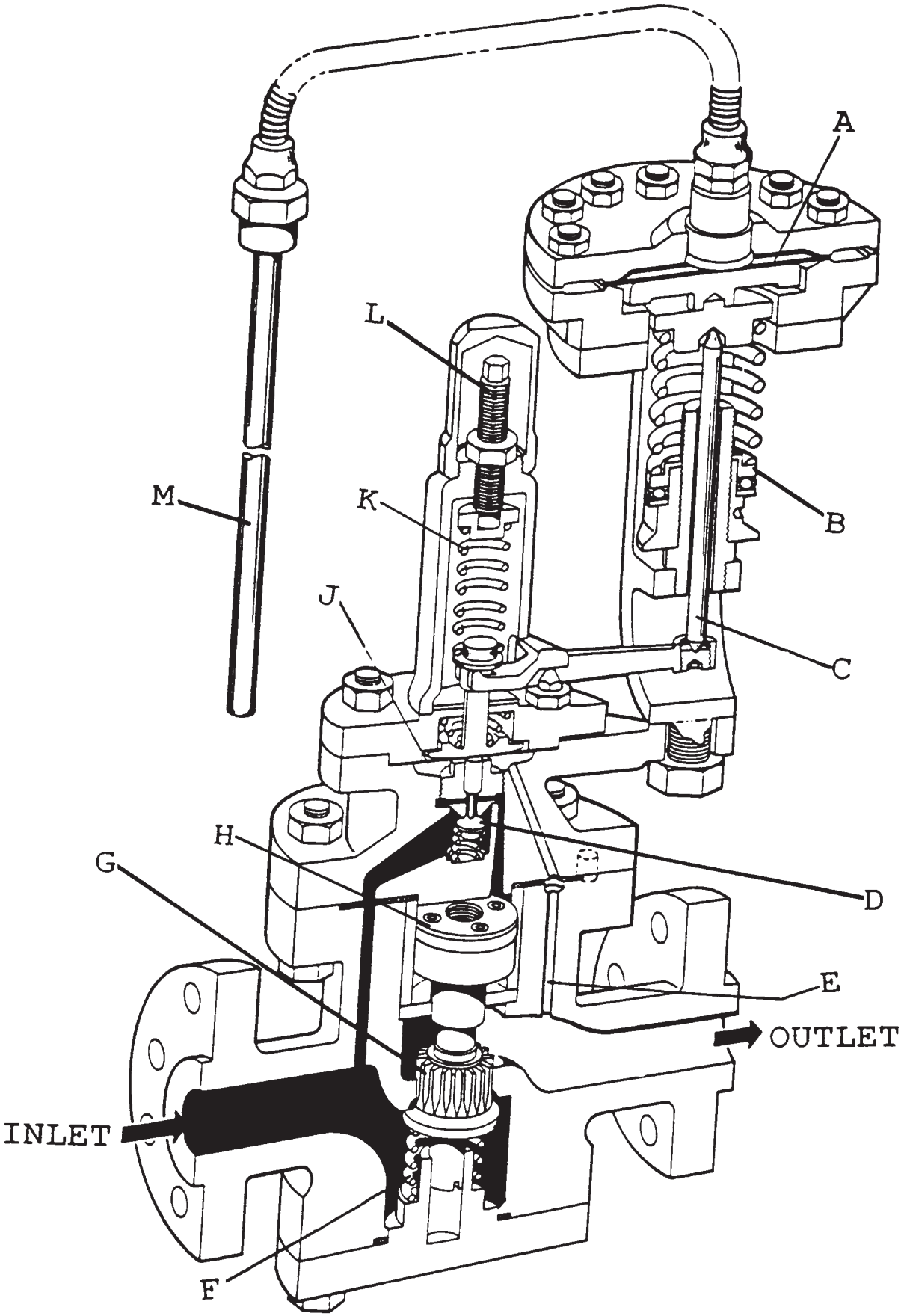

GS-0046

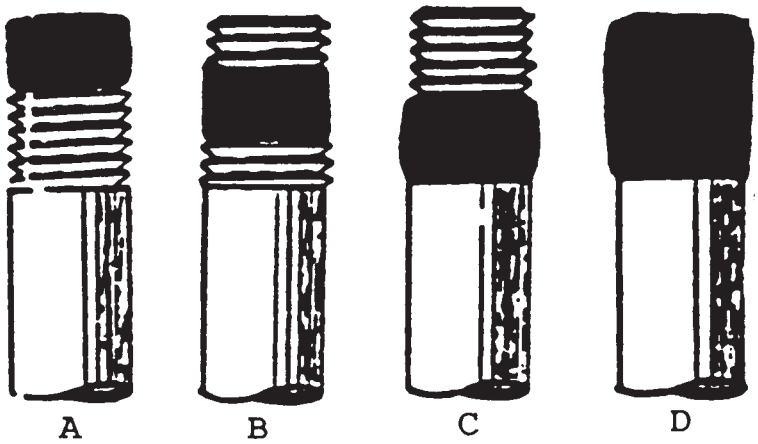

GS-0047

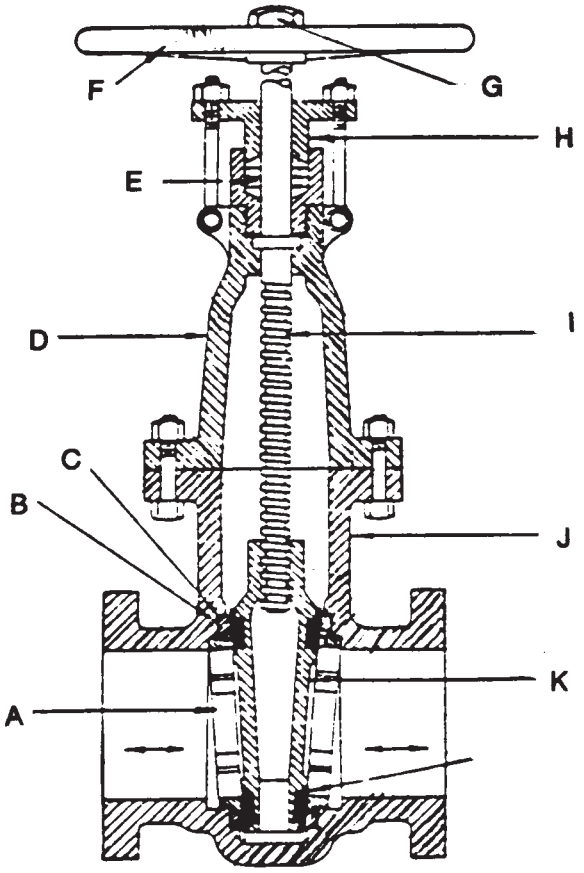

GS-0049

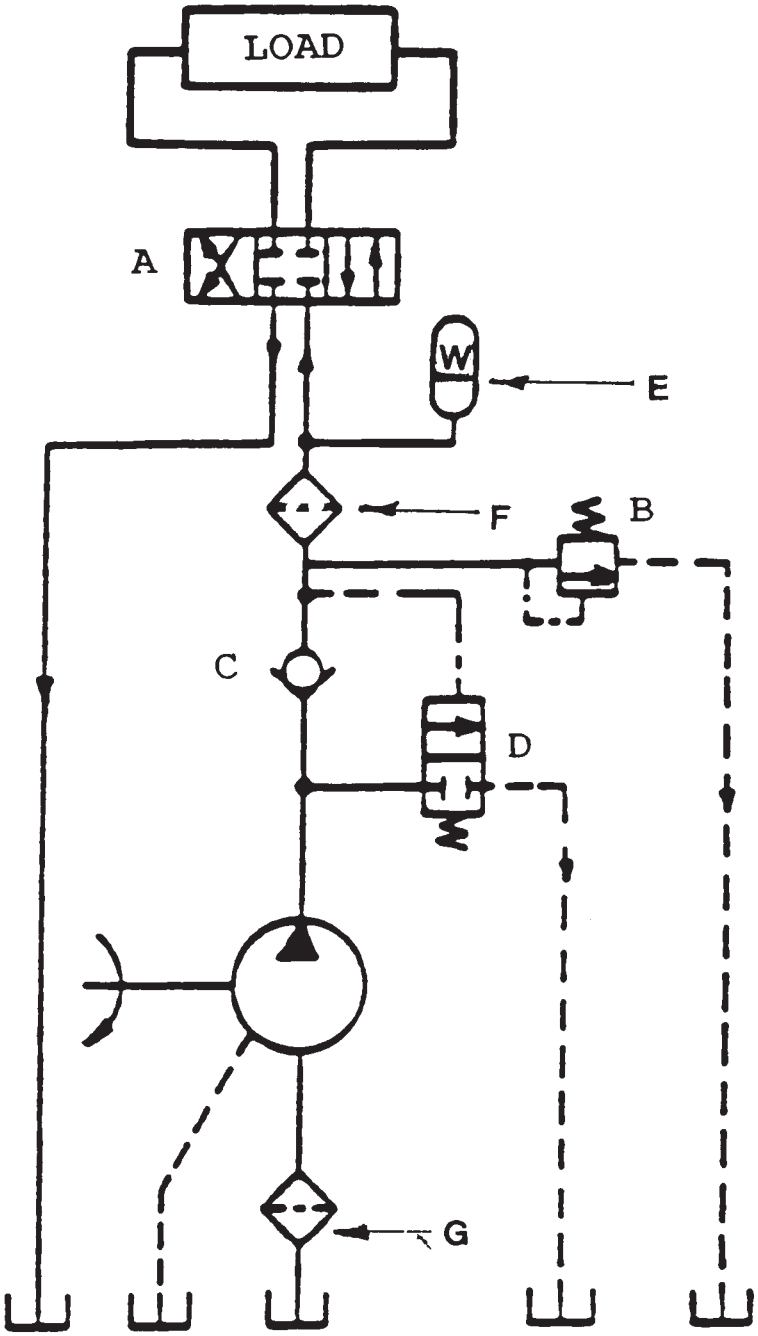

GS-0050

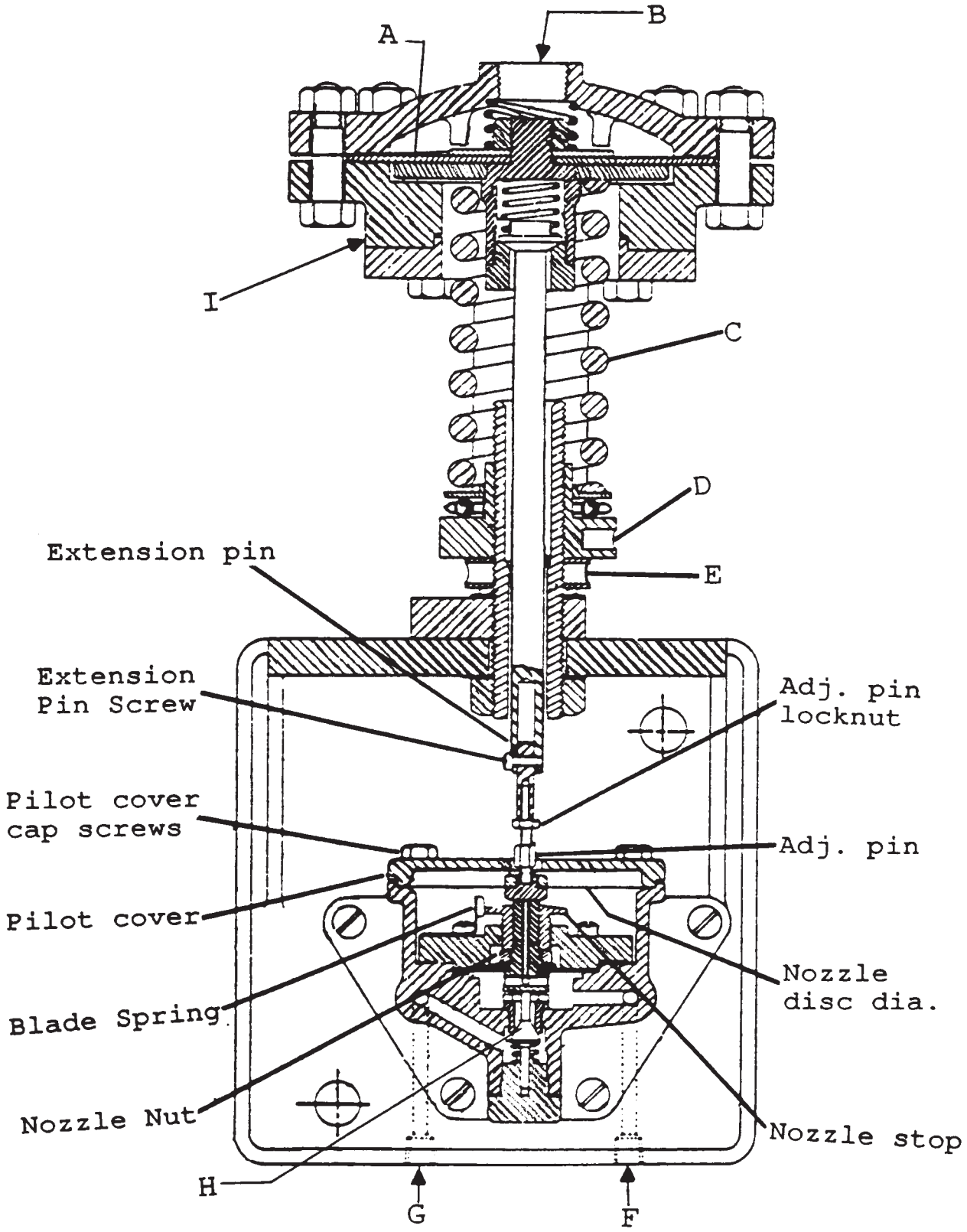
A
B
I
C
D
E
Extension pin
Extension
Pin Screw
Adj. pin
locknut
Pilot cover
cap screws
Adj. pin
Pilot cover
Nozzle
disc dia.
Blade Spring
Nozzle Nut
Nozzle stop
H
G
F

GS-0051

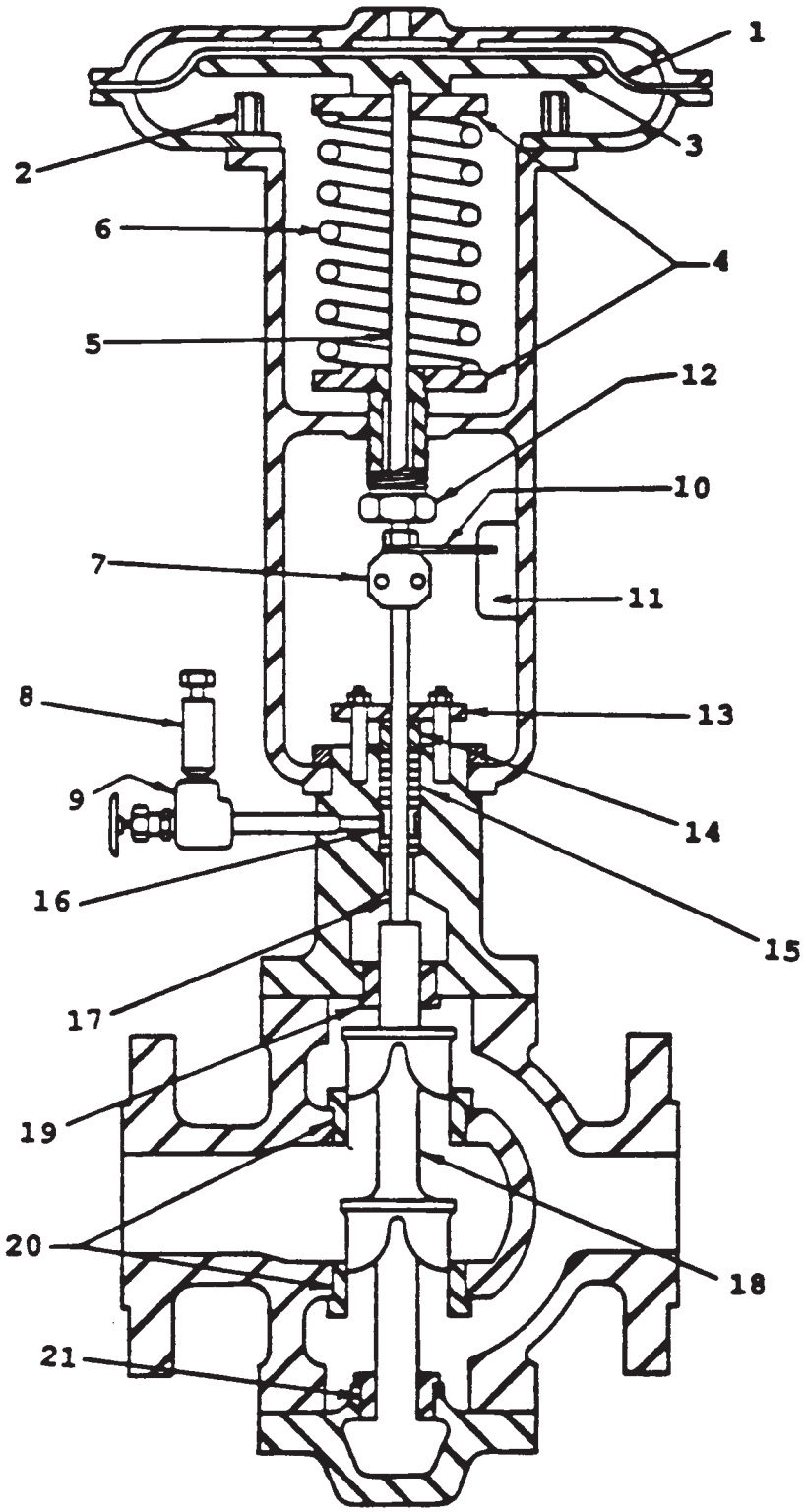

GS-0052

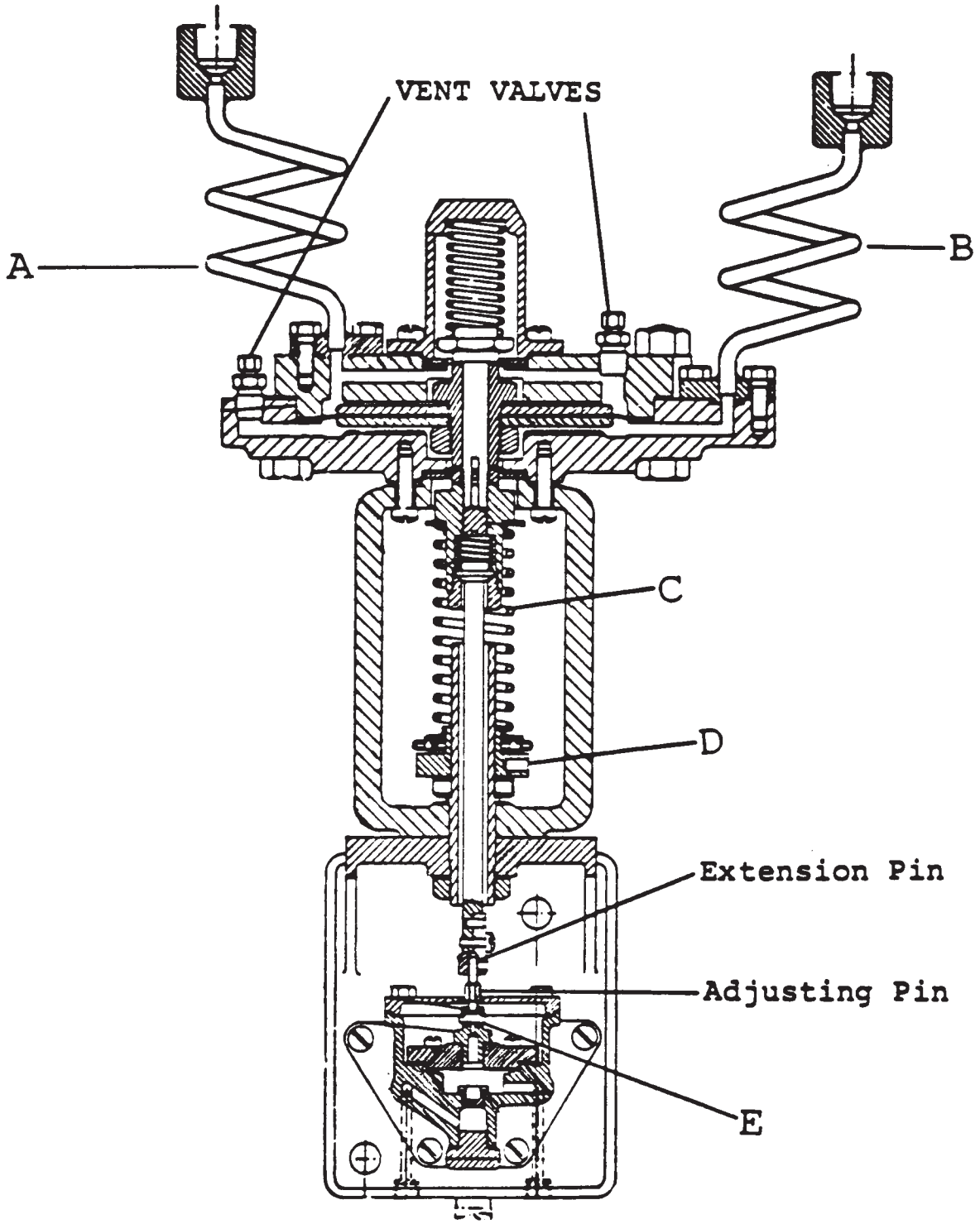

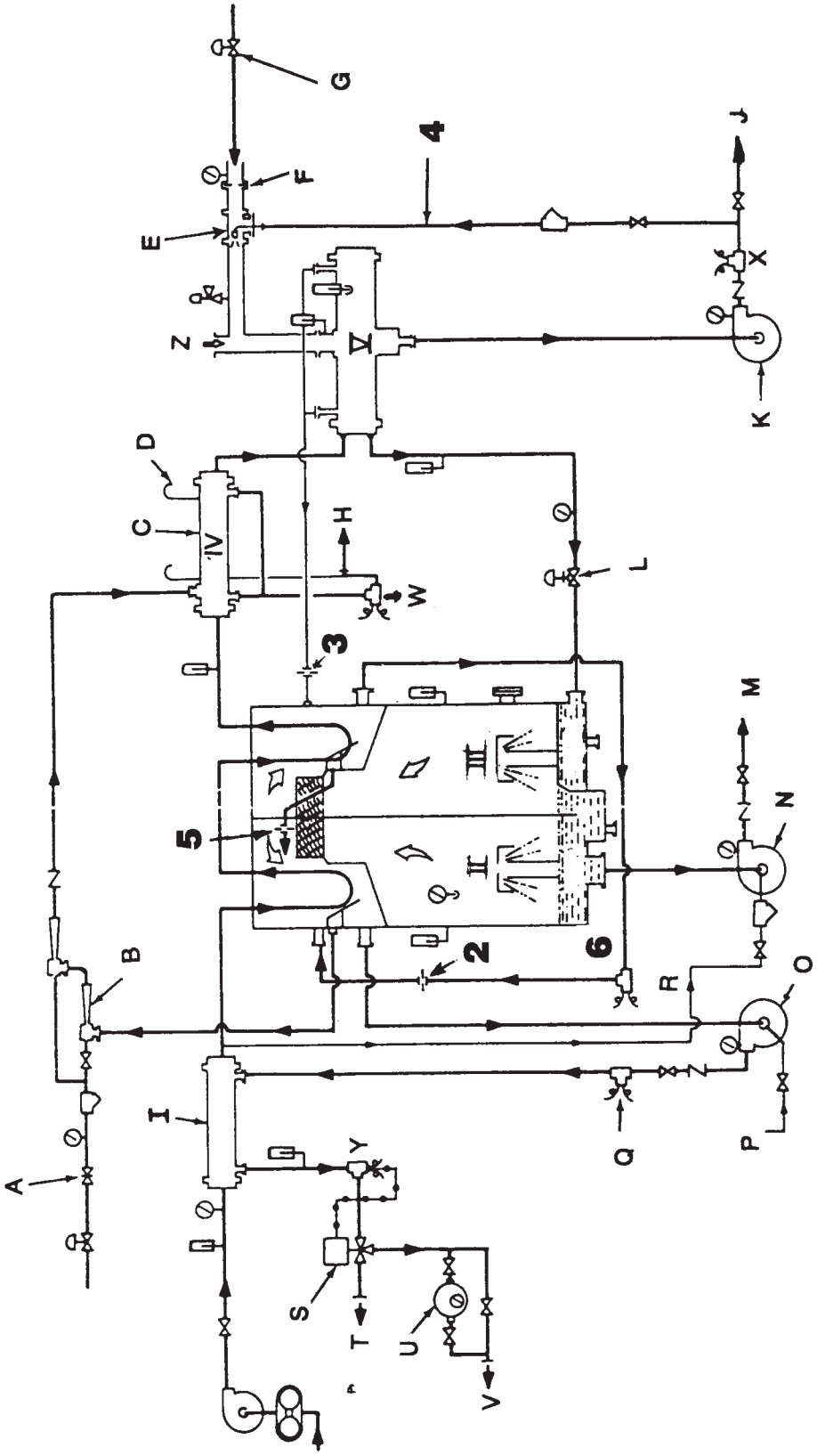
A
B
C
D
E
F
G
H
I
J
K
L
M
N
O
P
Q
R
S
T
U
V
W
X
Y
Z
1
2
3
4
5
6

GS-0054

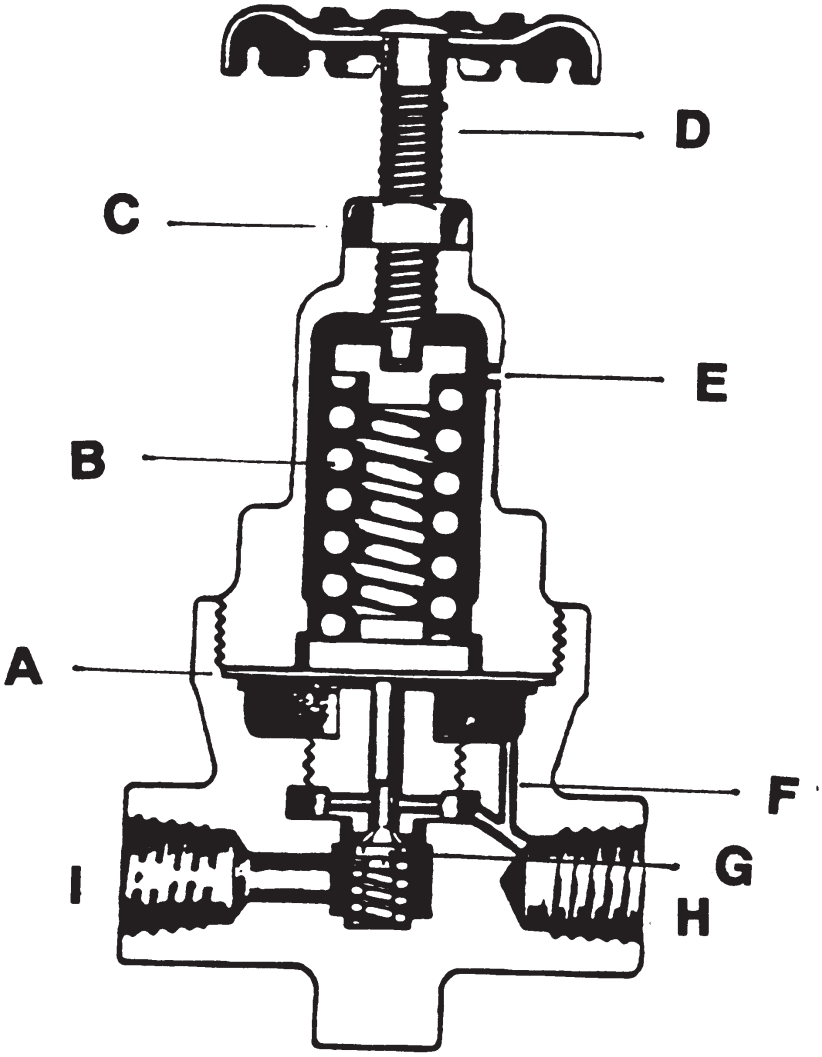

GS-0055

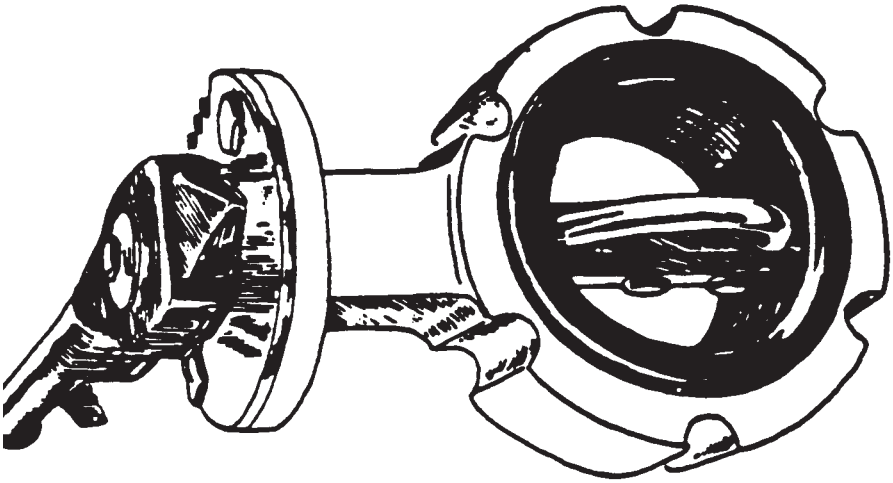

GS-0056

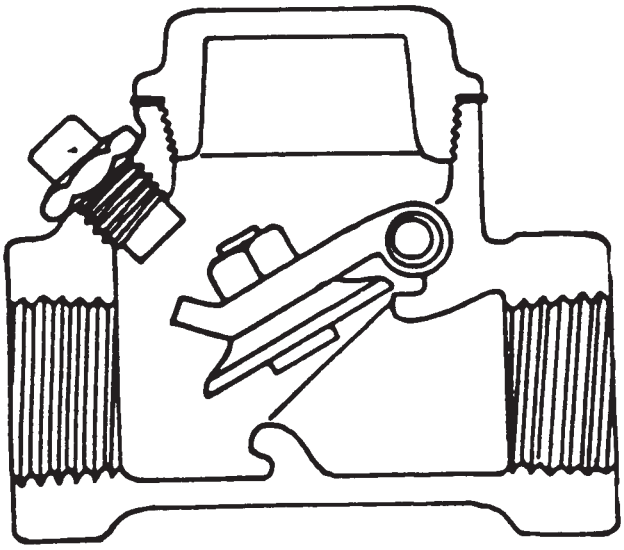

GS-0057

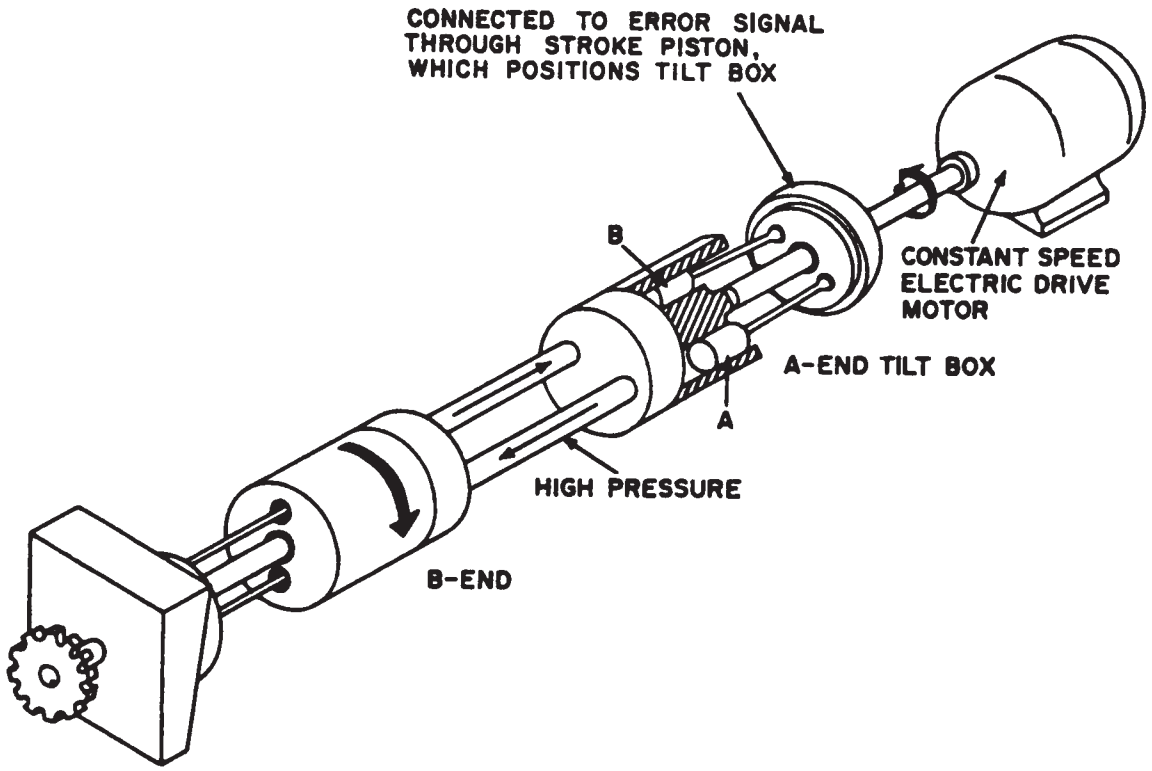
CONNECTED TO ERROR SIGNAL
THROUGH STROKE PISTON,
WHICH POSITIONS TILT BOX
B
CONSTANT SPEED
ELECTRIC DRIVE
MOTOR
A-END TILT BOX
A
HIGH PRESSURE
B-END

GS-0058

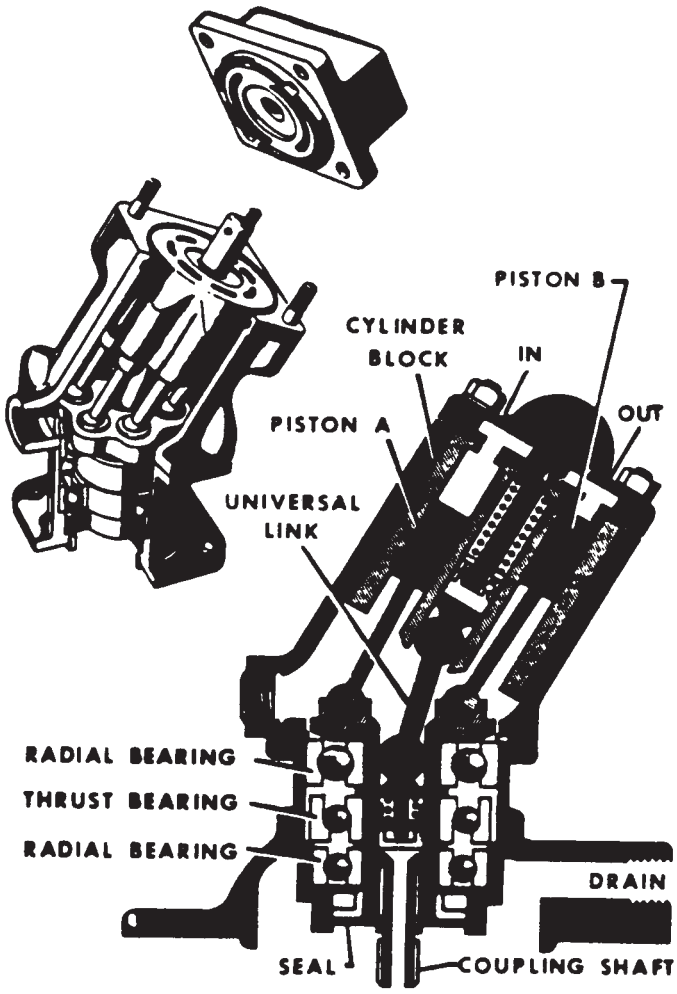
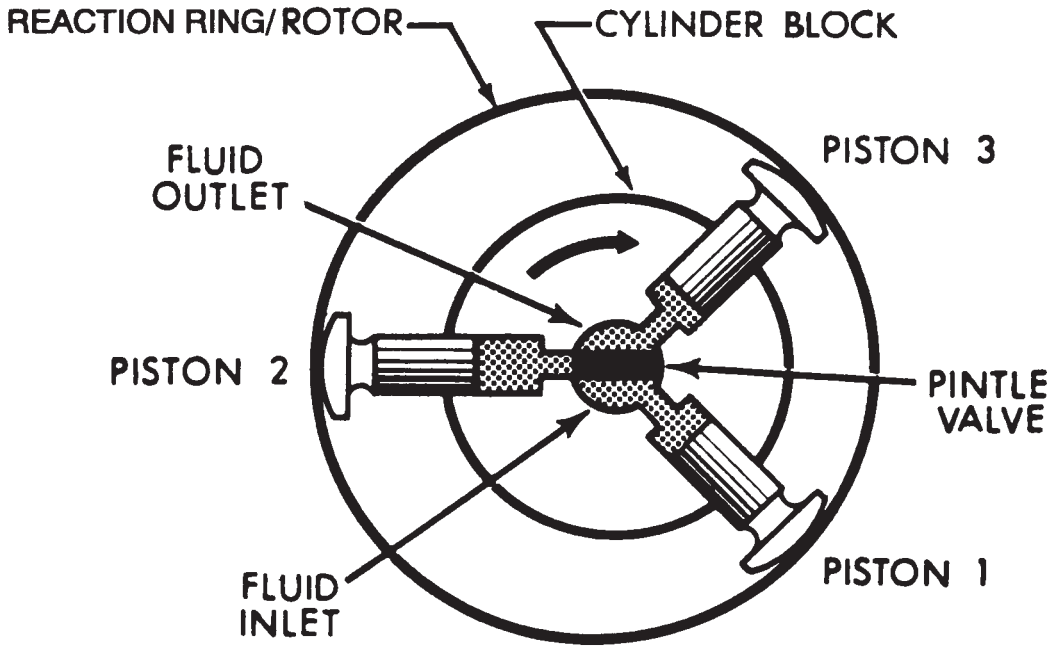
GS-0059