GS-0021

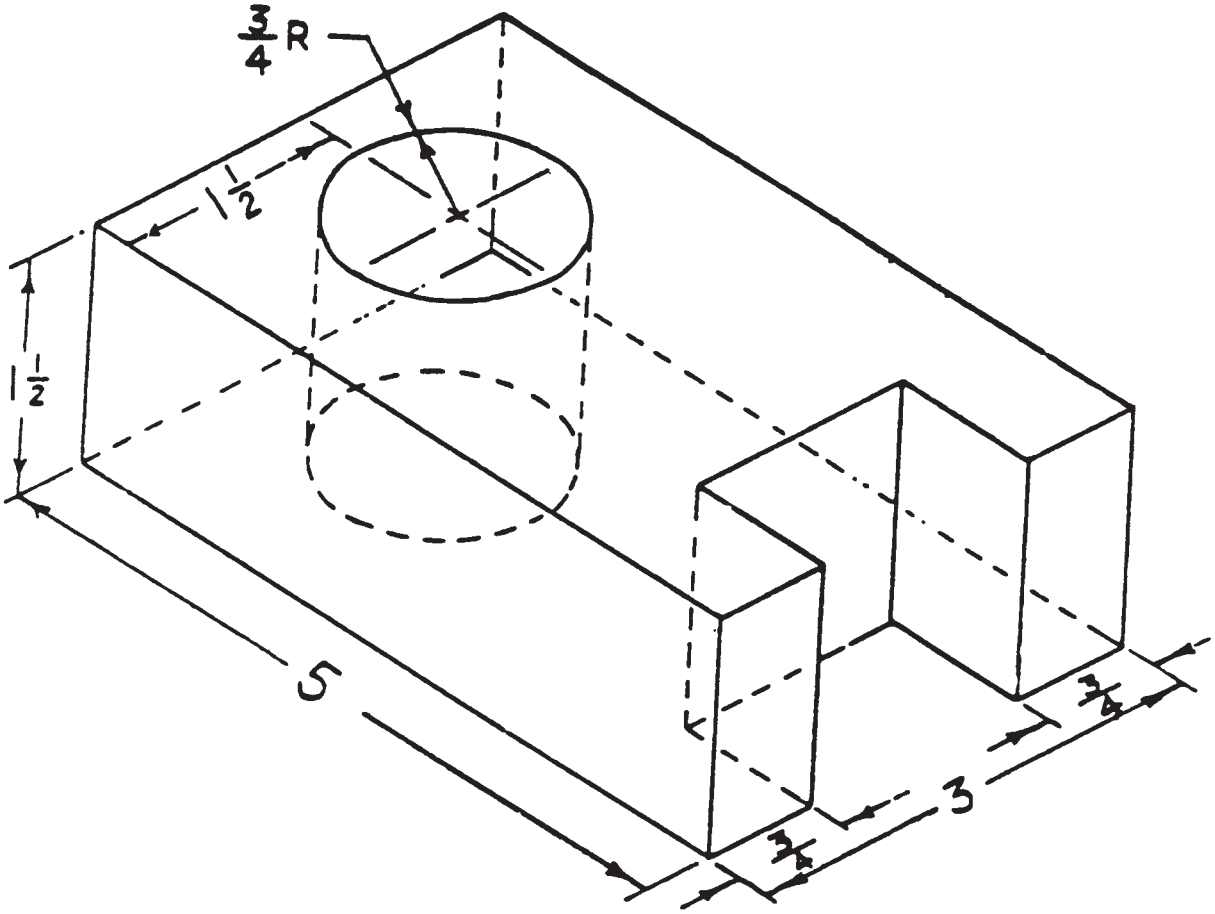

GS-0022

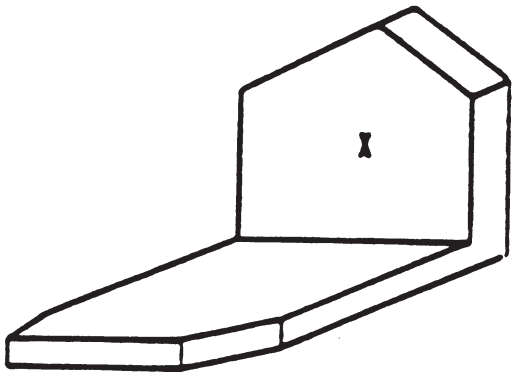

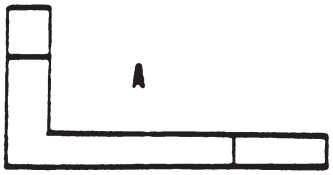

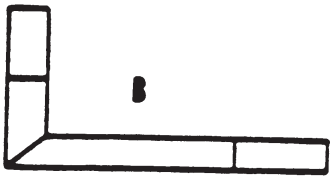

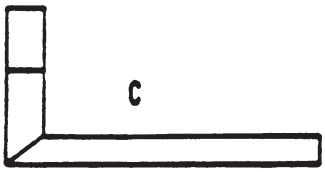

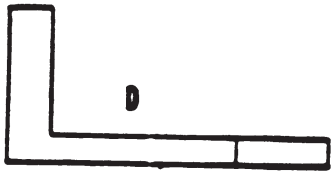

GS-0023

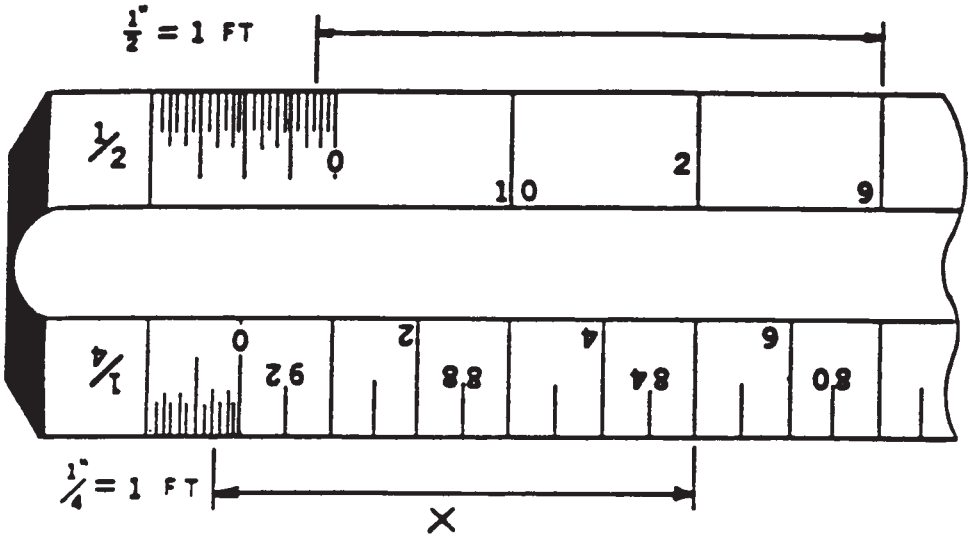

GS-0024

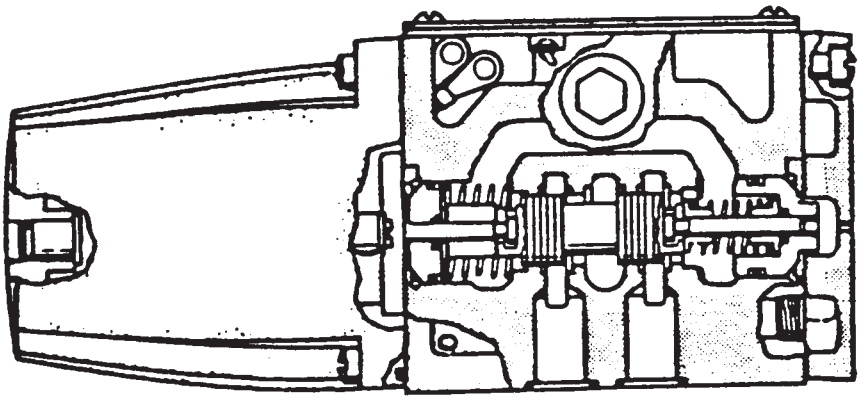

GS-0025

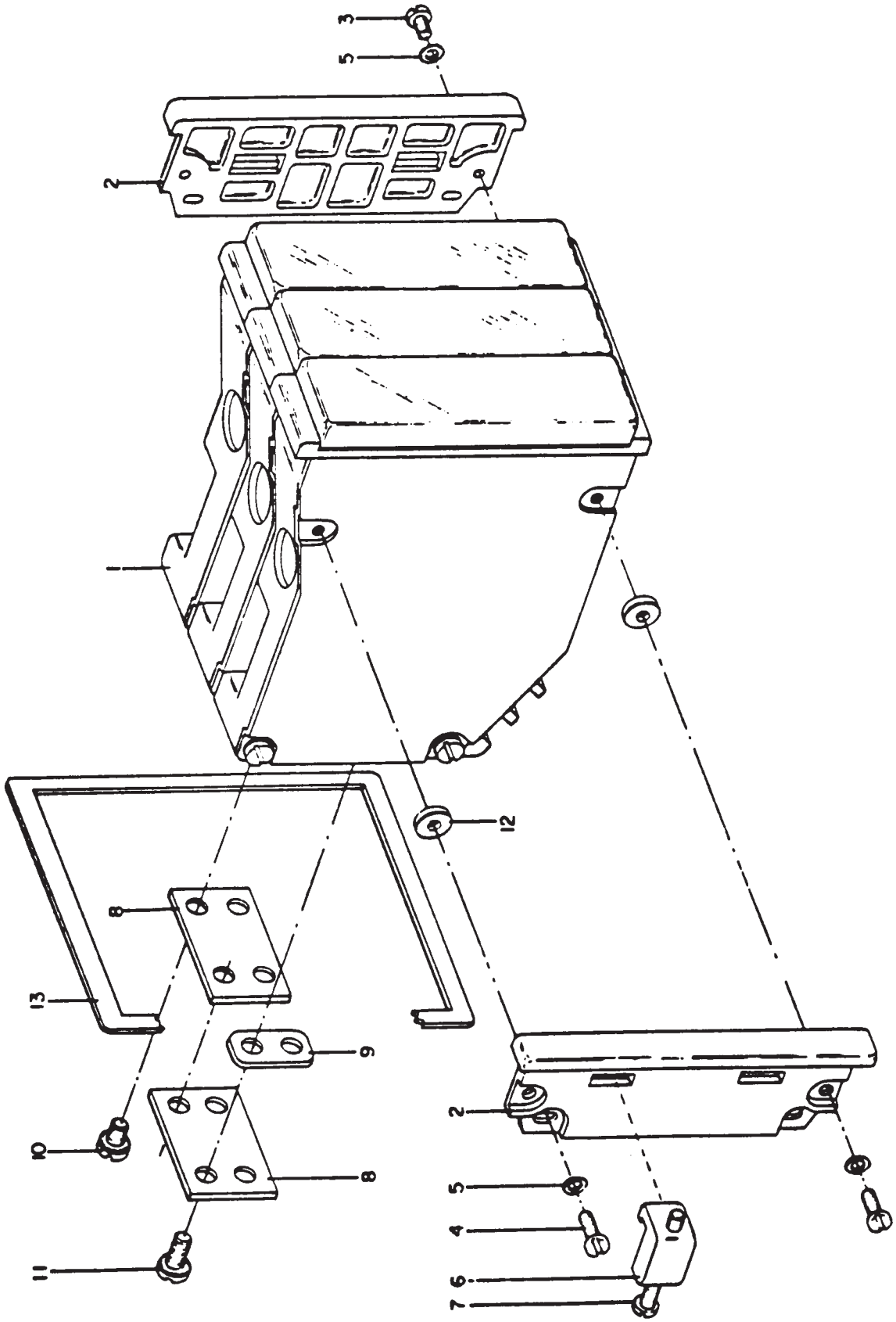

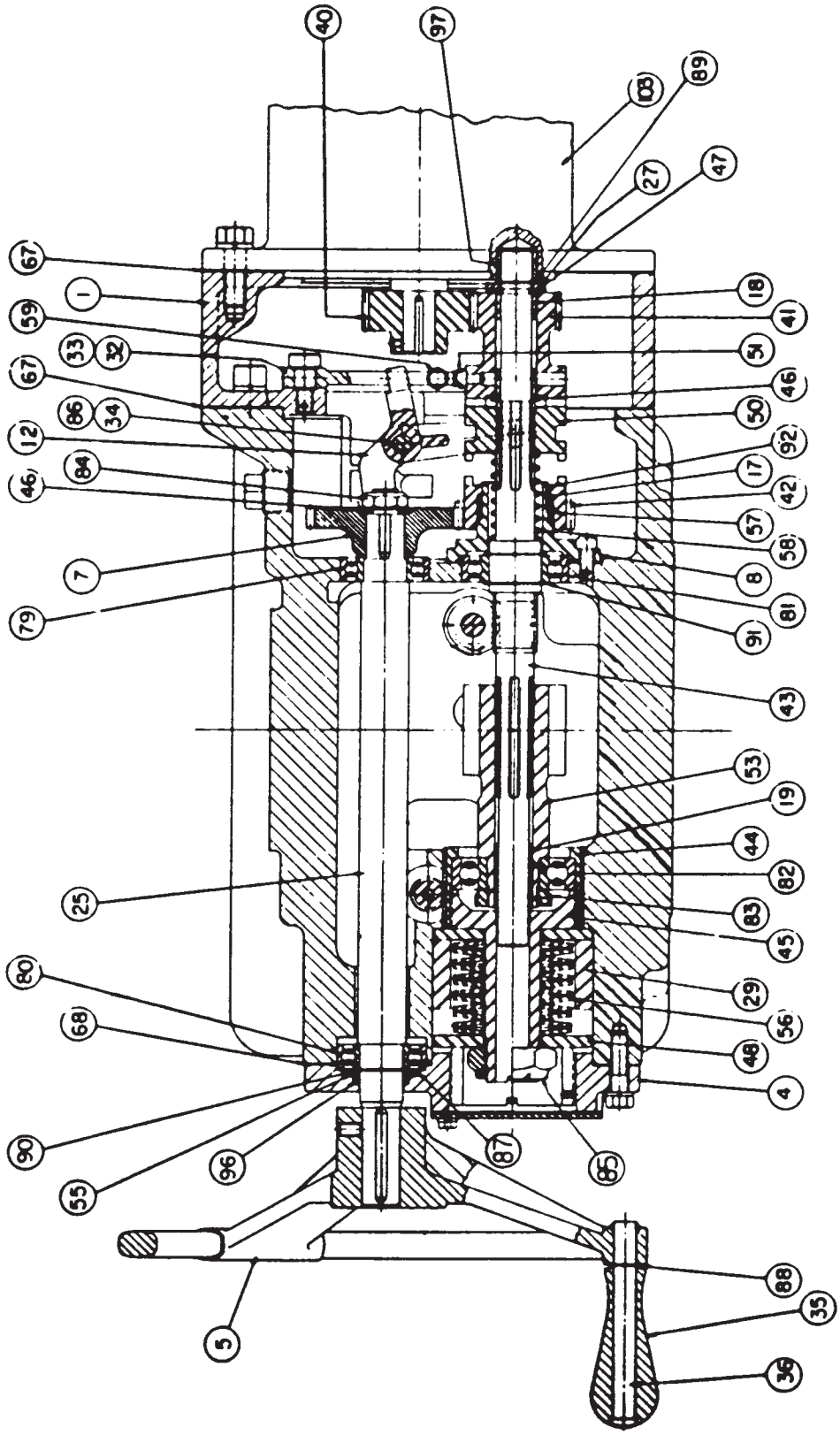

(COURTESY OF LIMITORQUE CORP.)

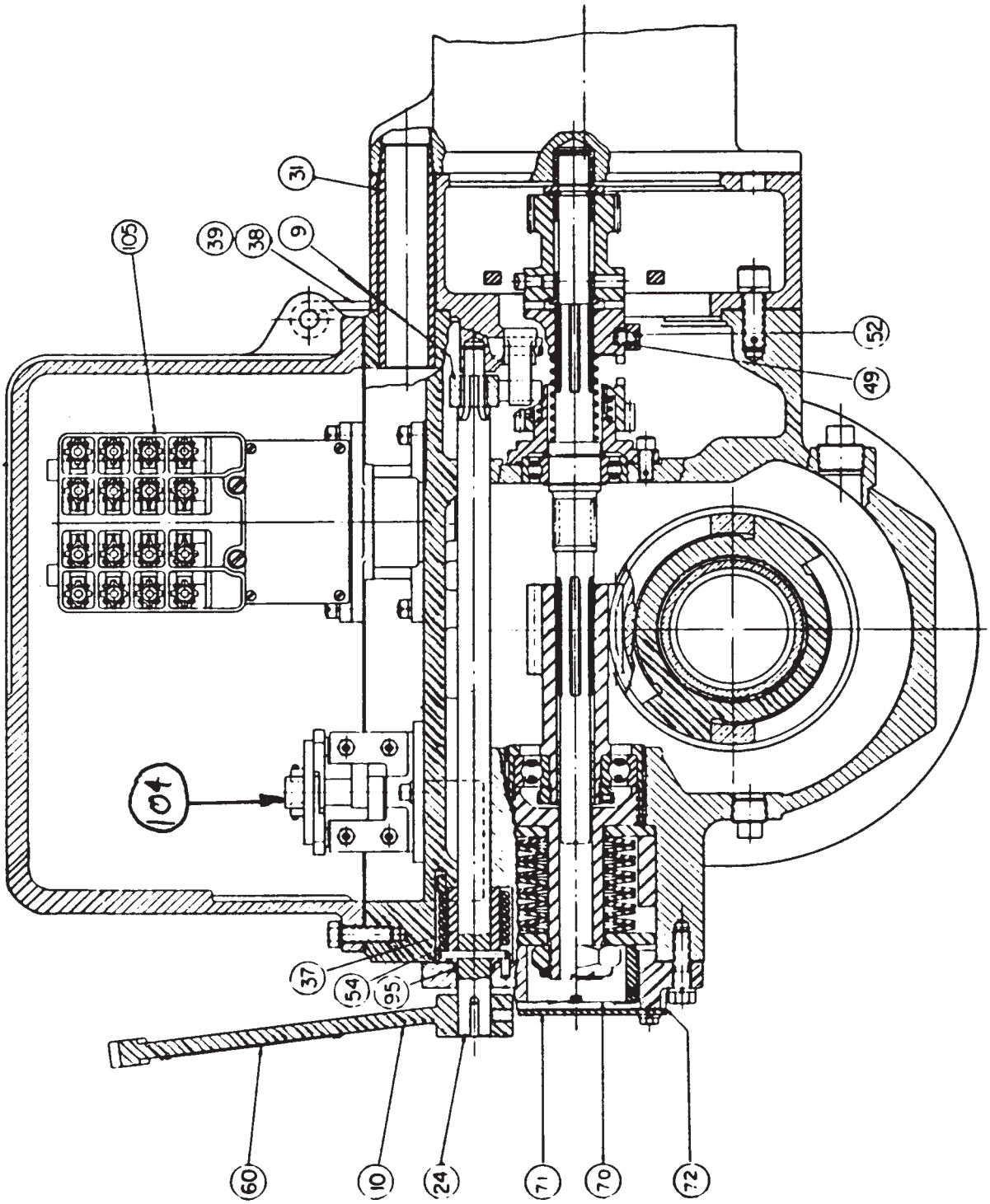

(COURTESY OF LIMITORQUE CORP.)

GS-0028

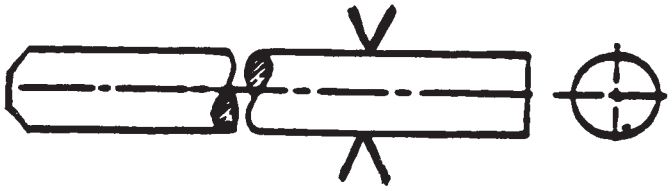

GS-0029

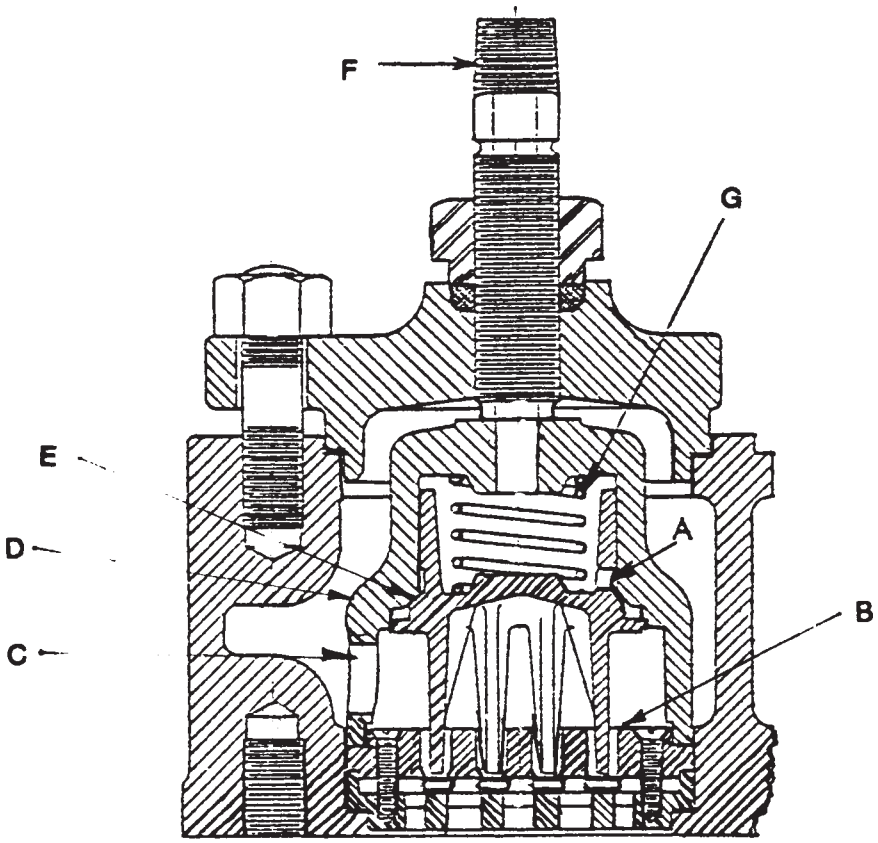

GS-0030

GS-0031

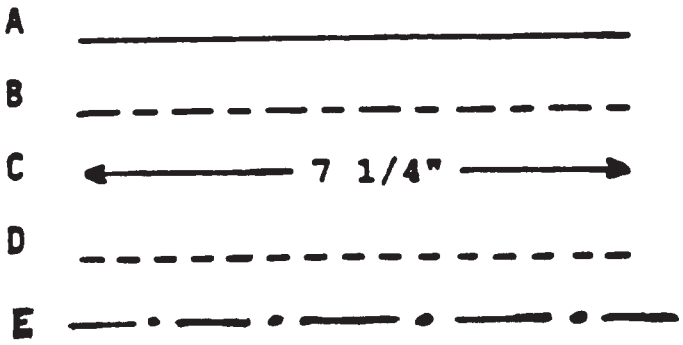

GS-0032

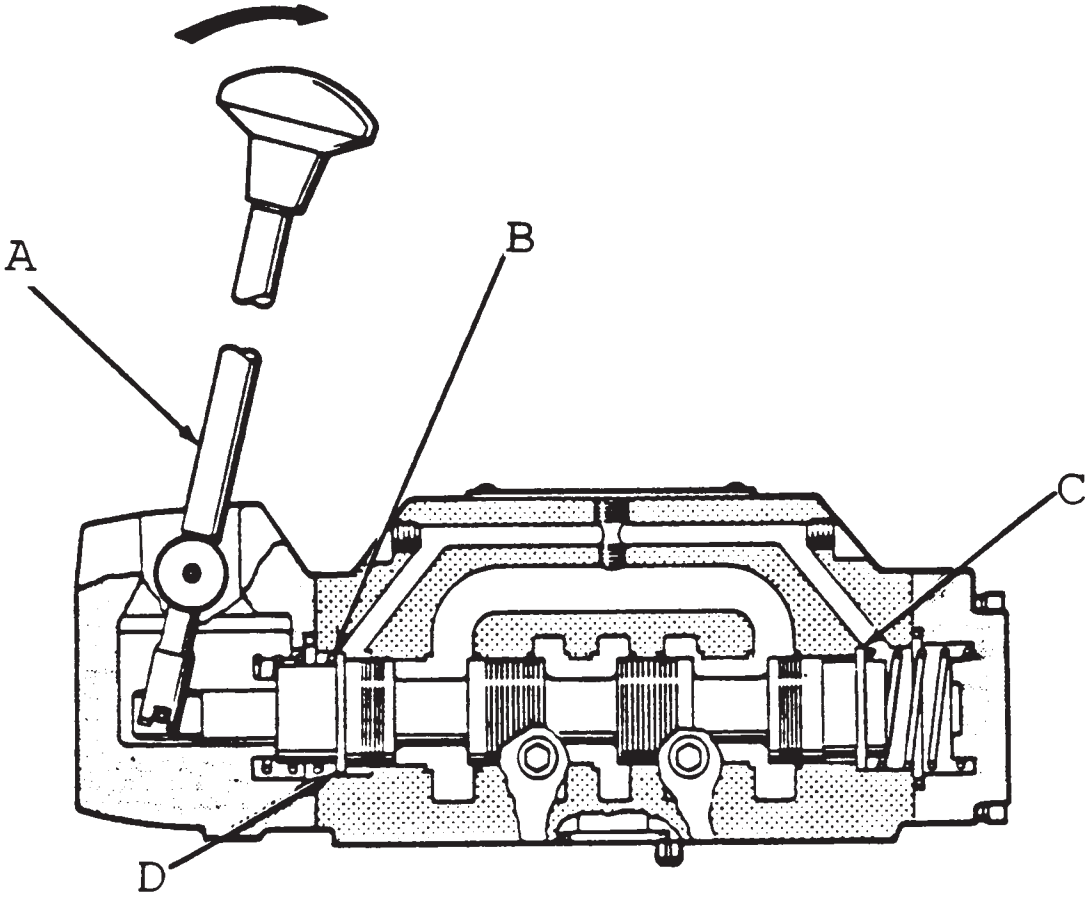

GS-0033

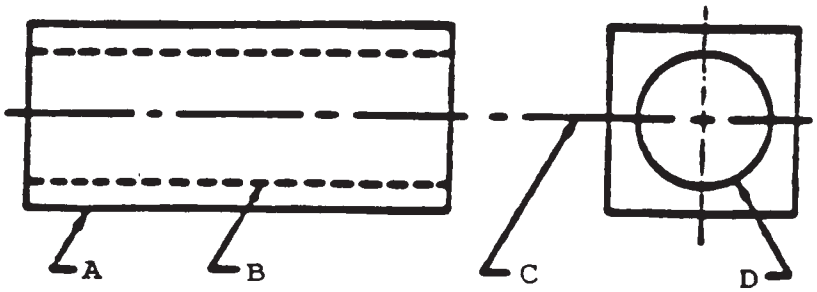

GS-0034

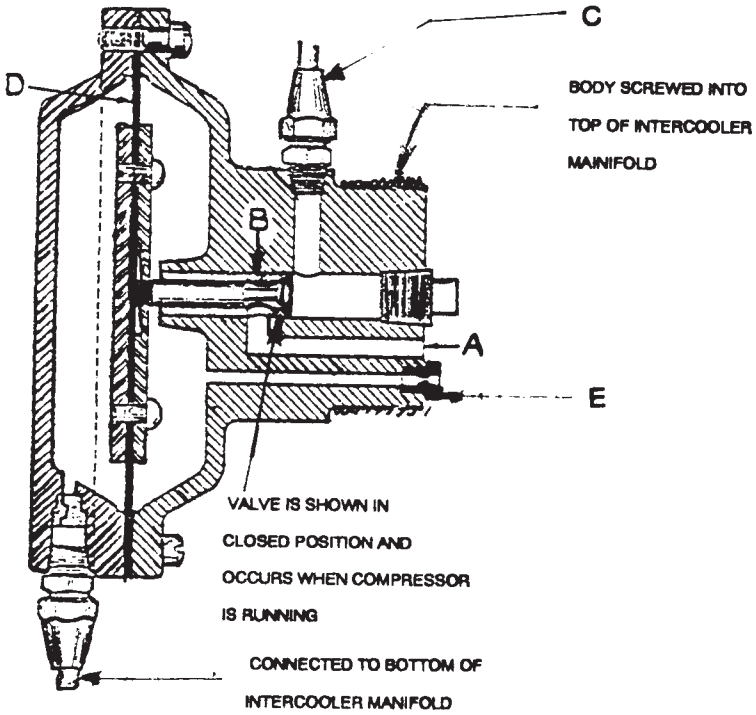

GS-0035

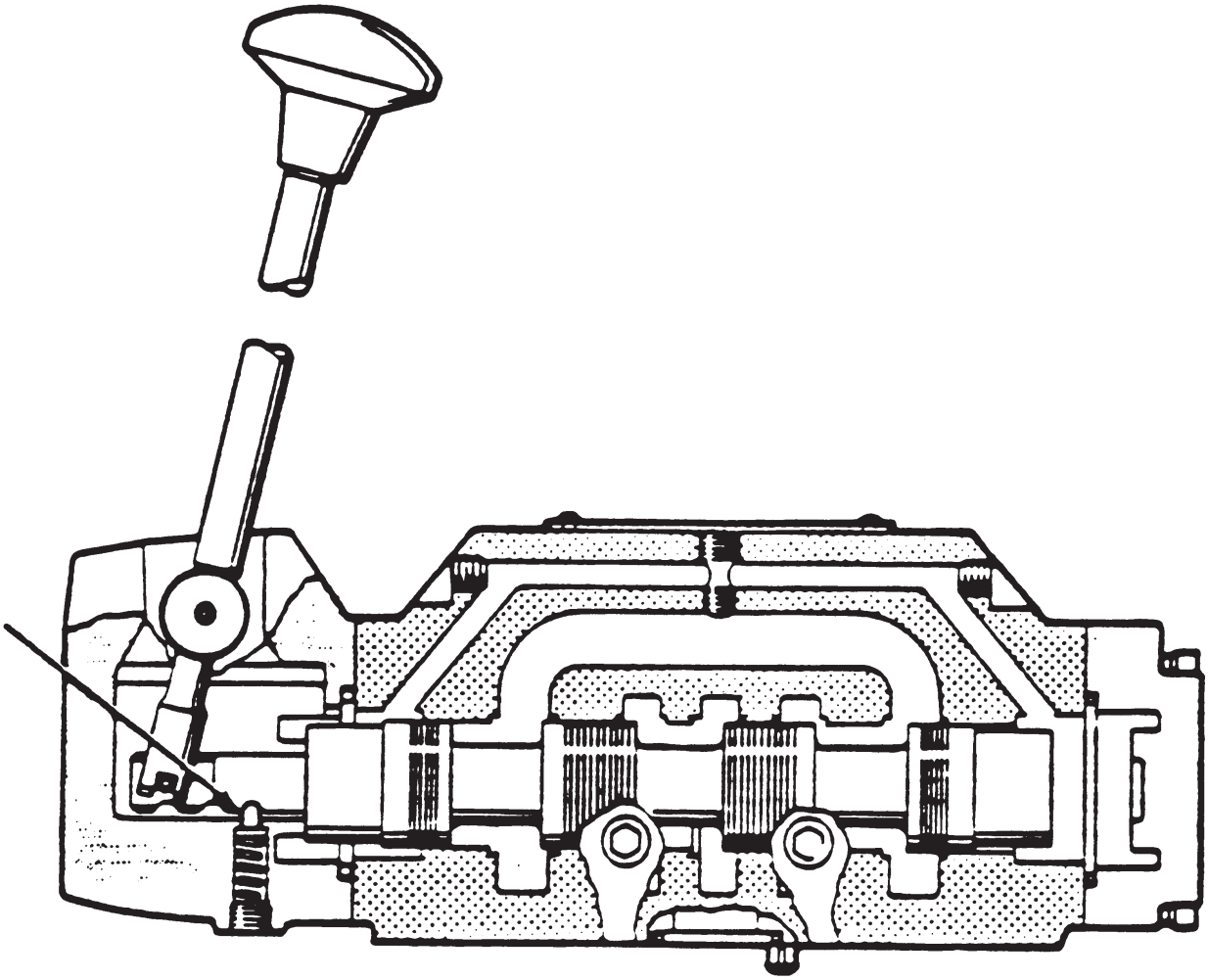

GS-0036

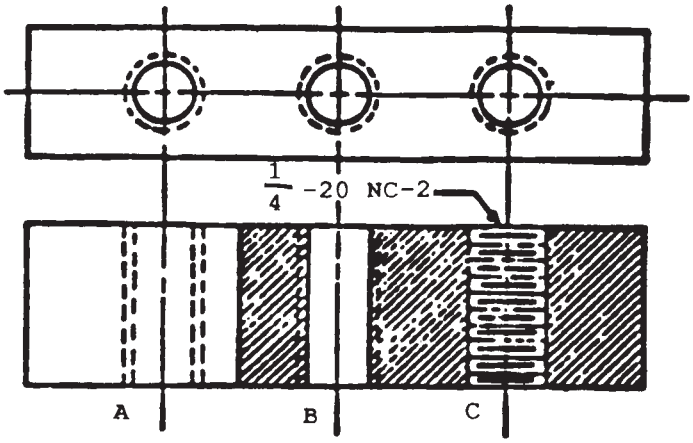

GS-0037

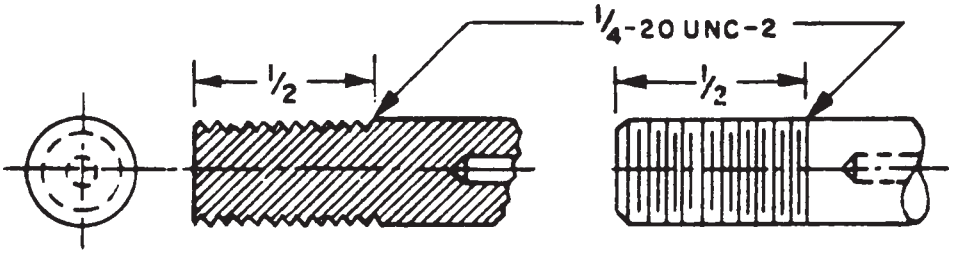

GS-0038

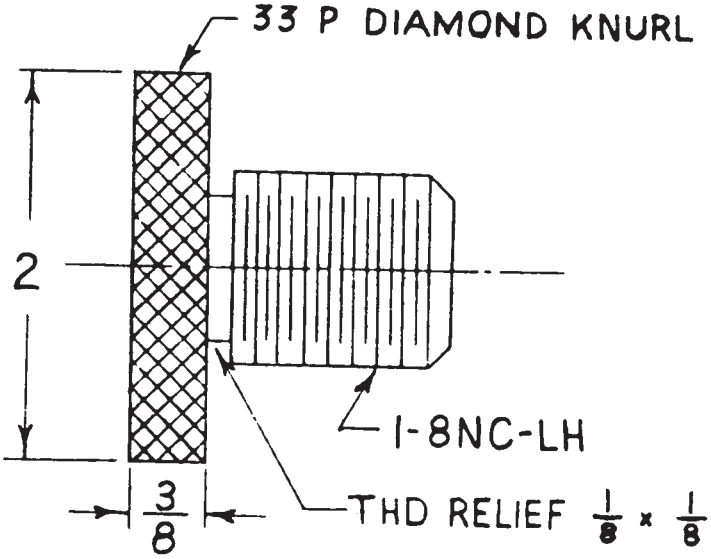

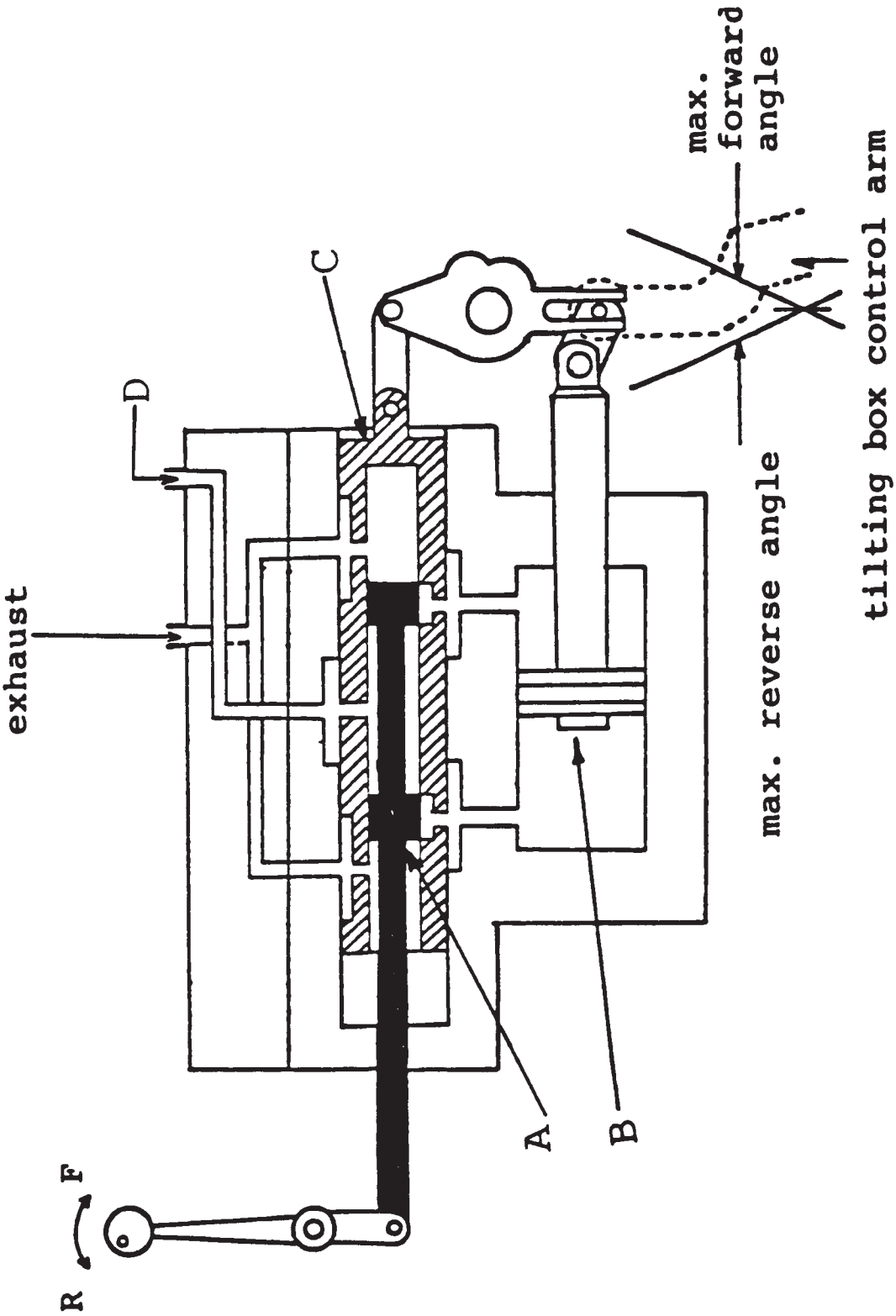
exhaust
D
C
A
B
F
R
max. forward angle
max. reverse angle
tilting box control arm

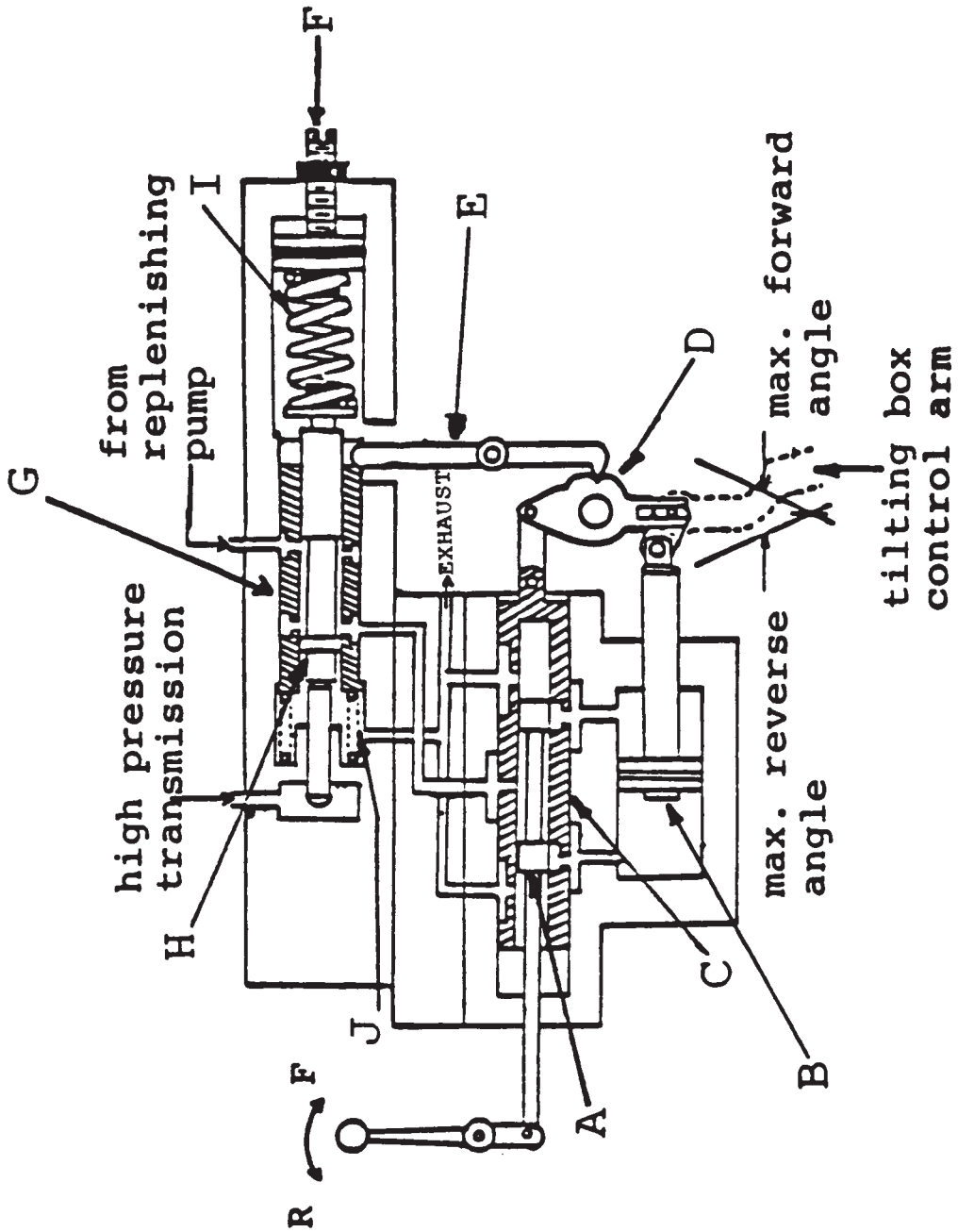
F
I
E
from replenishing pump
G
D
max. forward angle
tilting box control arm
EXHAUST
high pressure transmission
H
J
max. reverse angle
C
B
A
F
R
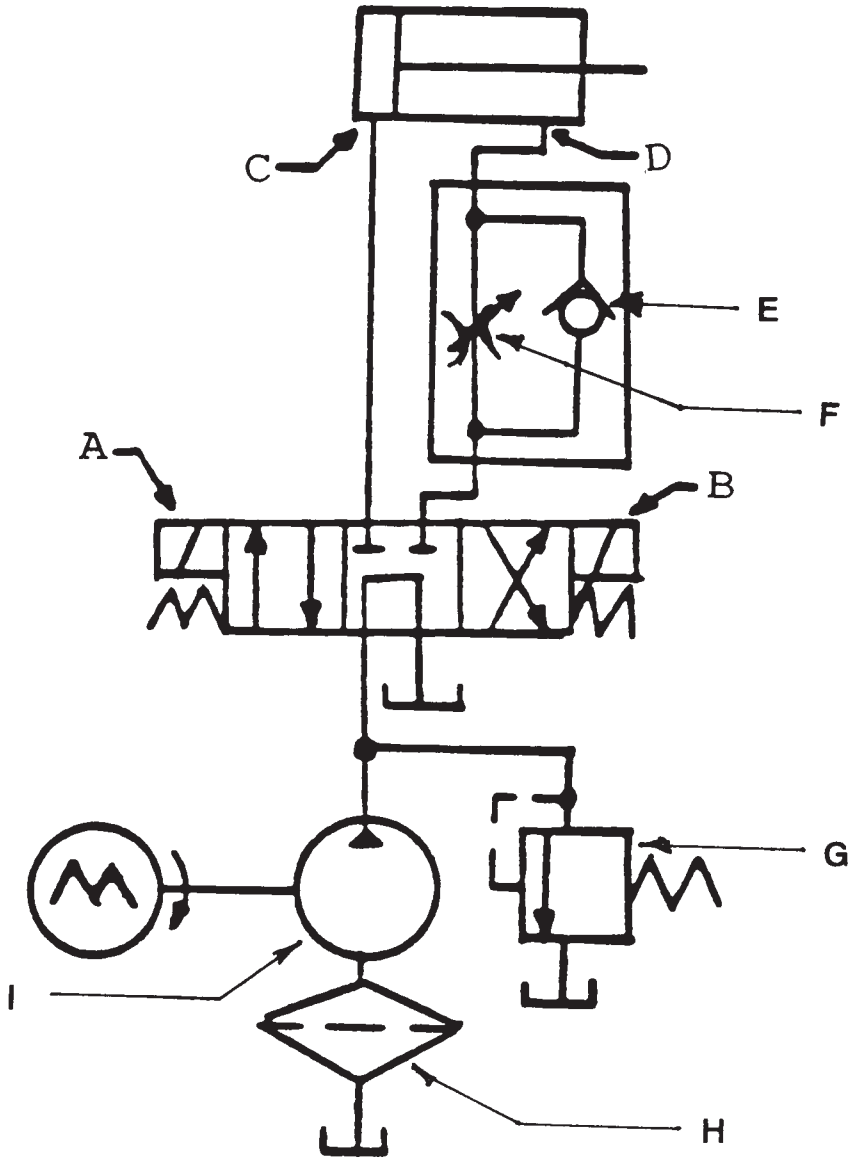
GS-0041