A

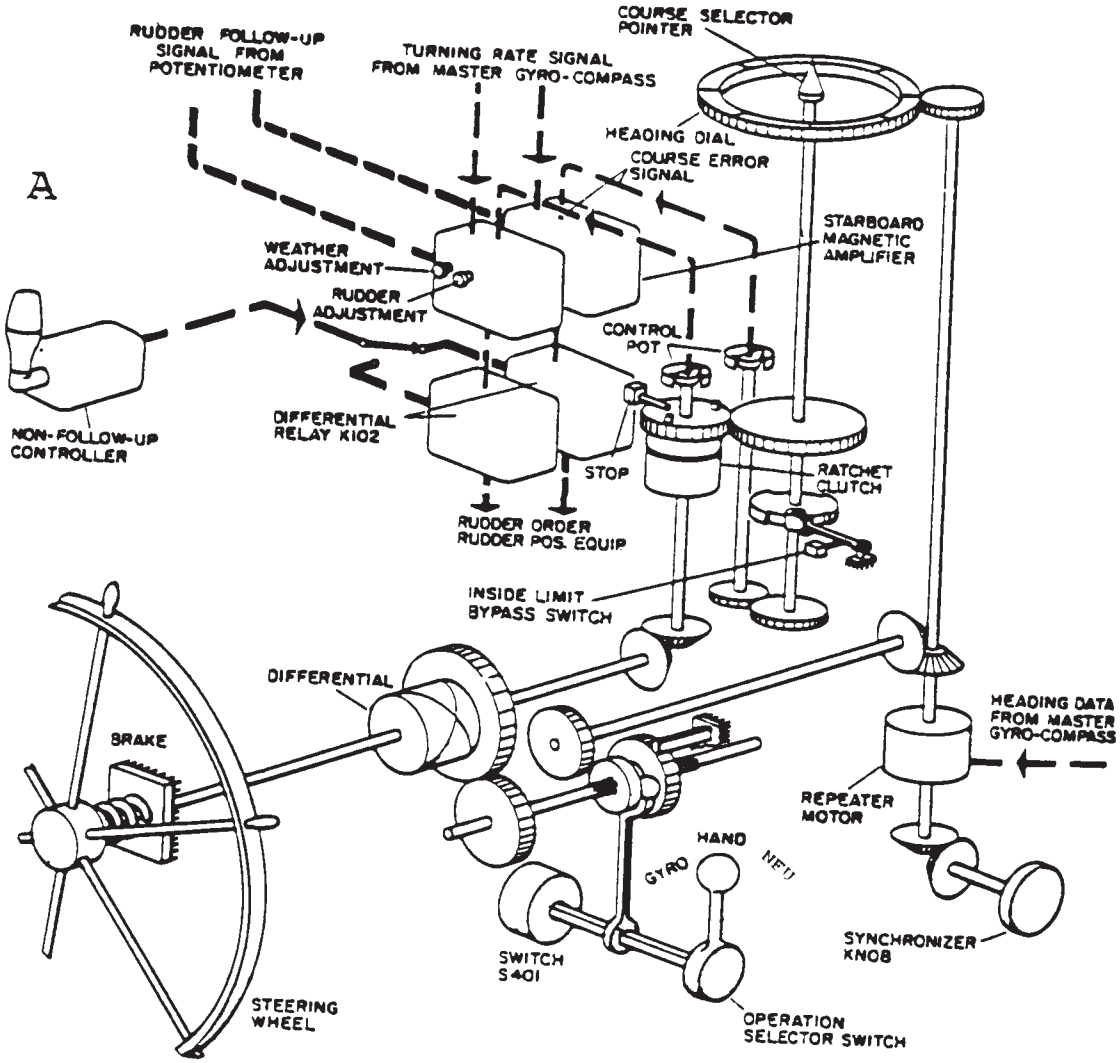

Simplified isometric schematic of dual control Sperry Gyro-Pilot® steering stand.

B

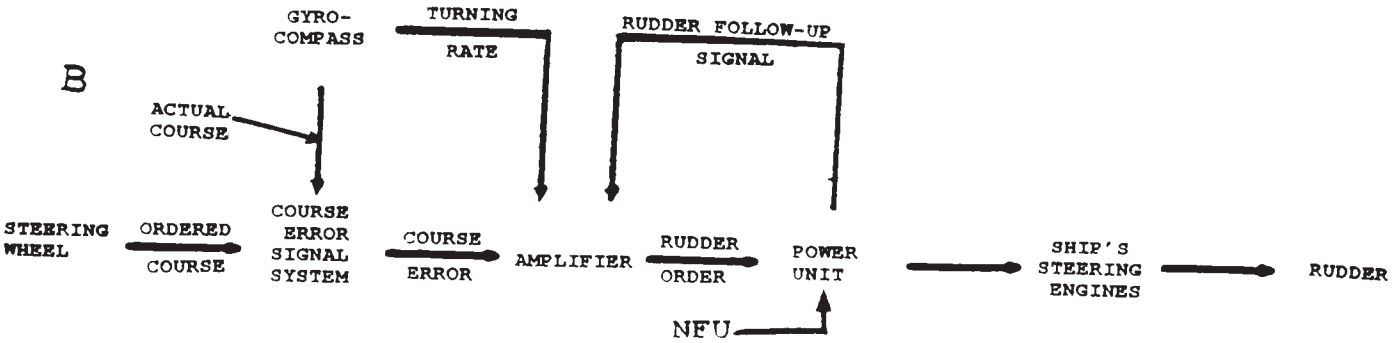

(Courtesy of Sperry Marine Inc.)

EL-0099

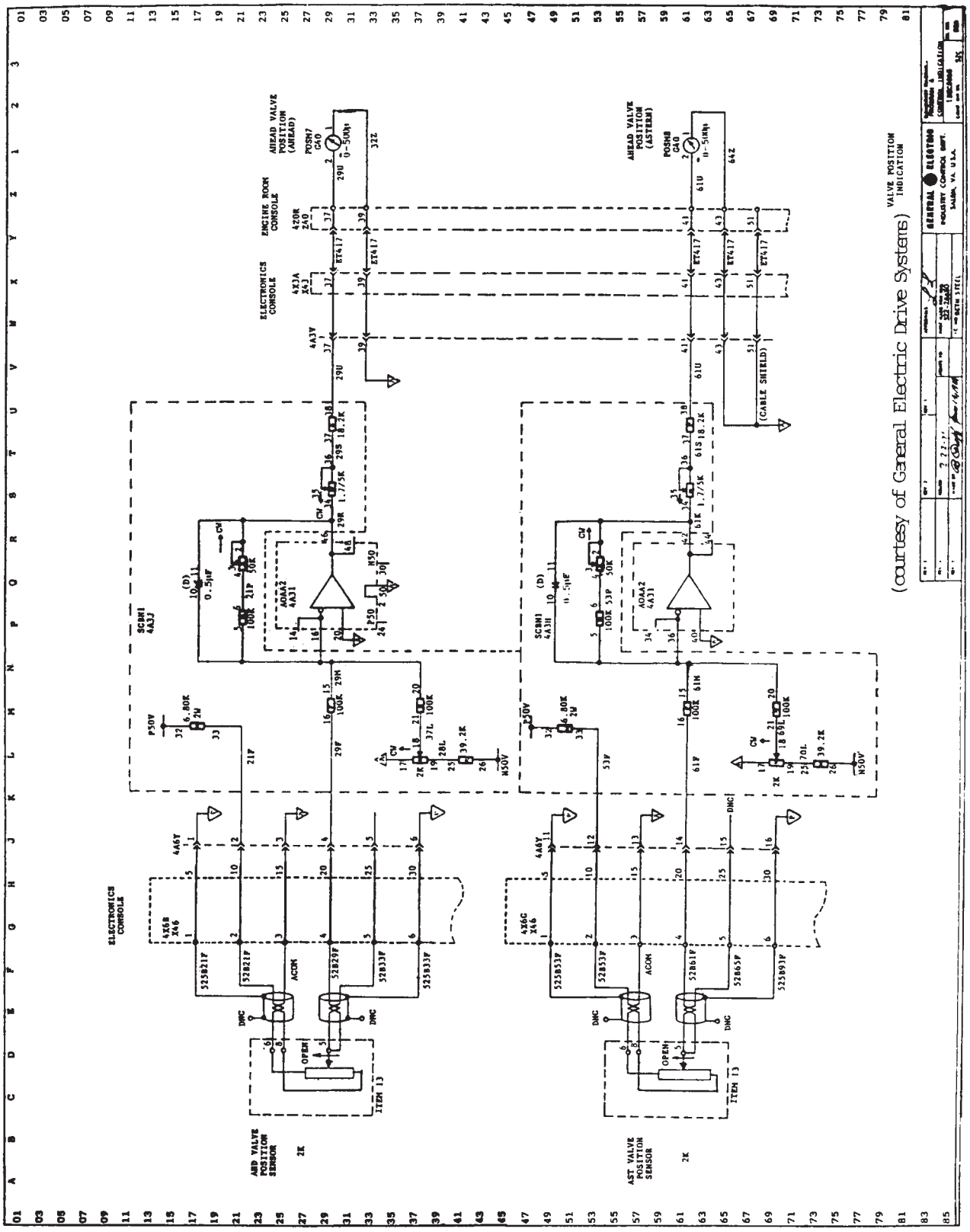

(courtesy of General Electric Drive Systems)

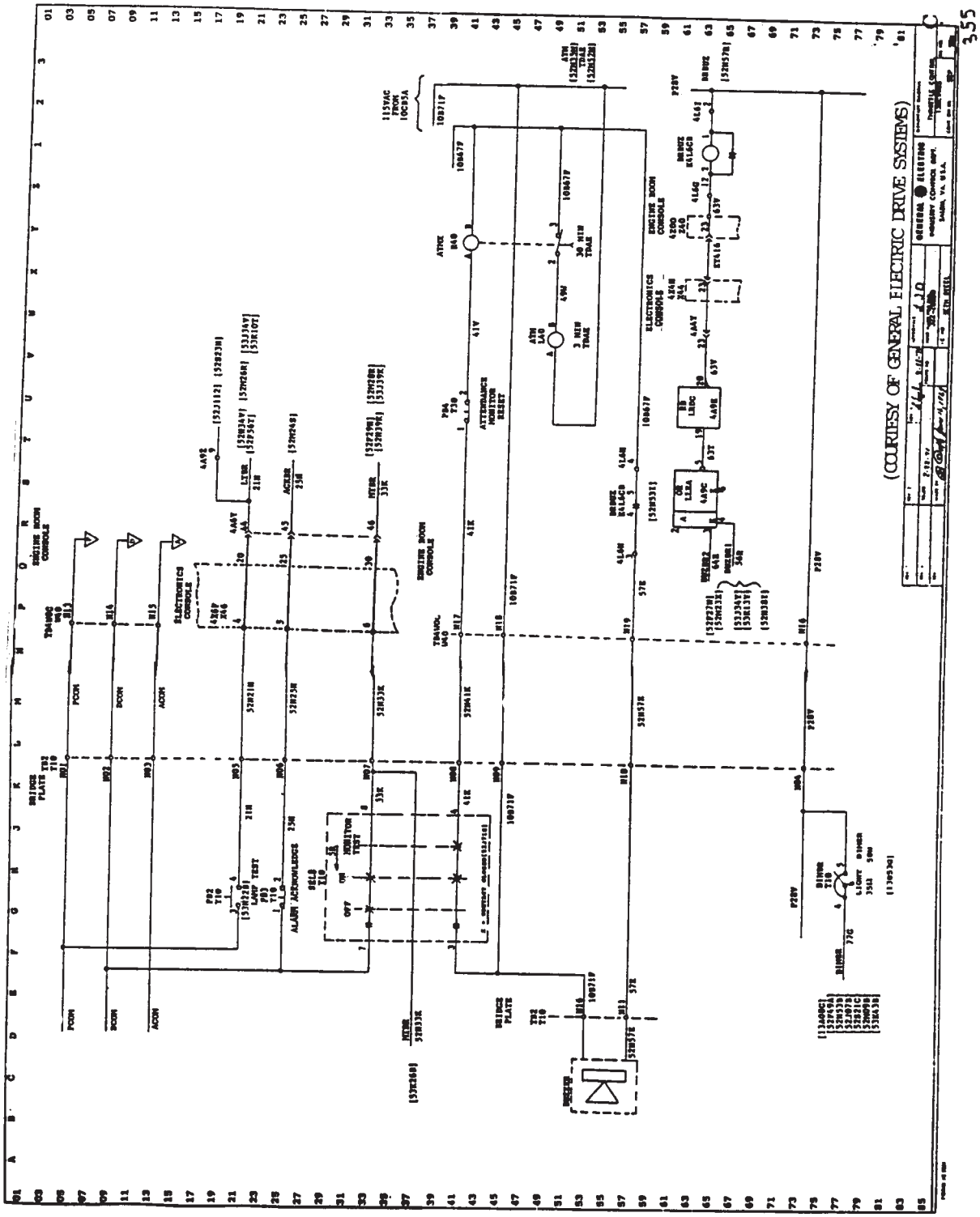
(COURTESY OF GENERAL ELECTRIC DRIVE SYSTEMS)

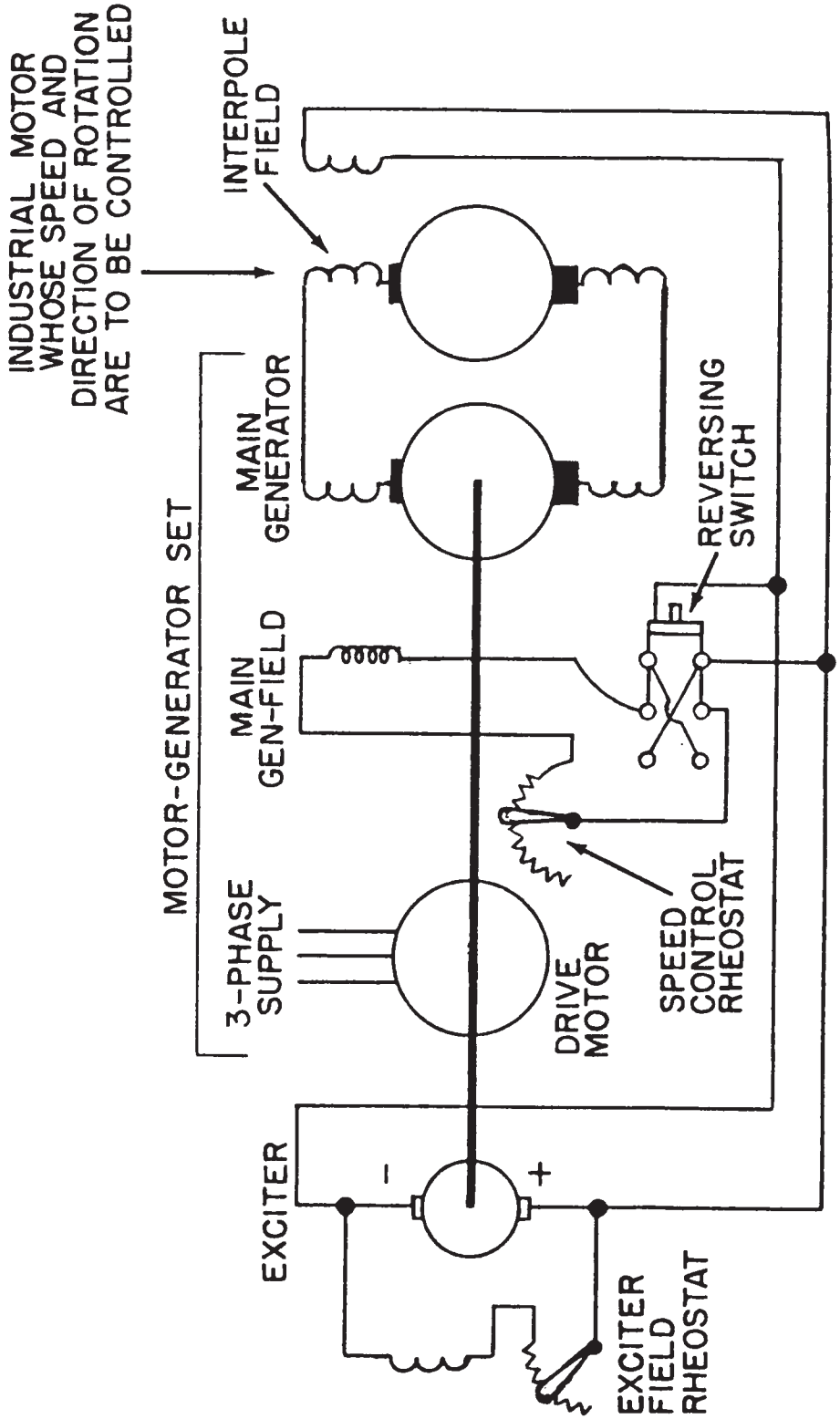
INDUSTRIAL MOTOR WHOSE SPEED AND DIRECTION OF ROTATION ARE TO BE CONTROLLED
INTERPOLE FIELD
MOTOR-GENERATOR SET
MAIN GENERATOR
MAIN GEN-FIELD
3-PHASE SUPPLY
DRIVE MOTOR
REVERSING SWITCH
SPEED CONTROL RHEOSTAT
EXCITER
-
+
EXCITER FIELD RHEOSTAT