EL-0048

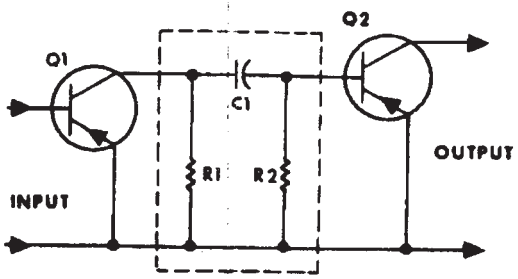

EL-0049

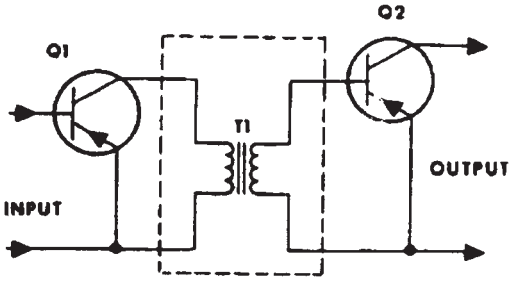

EL-0050

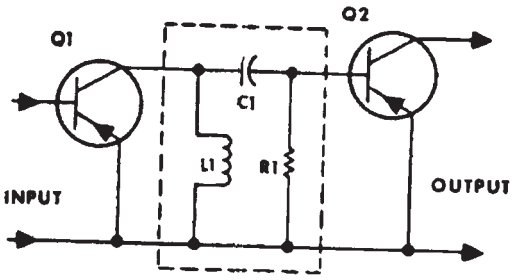

EL-0051

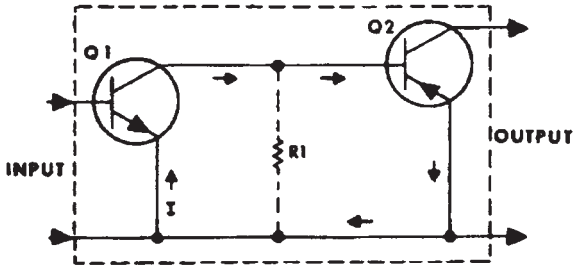

EL-0052

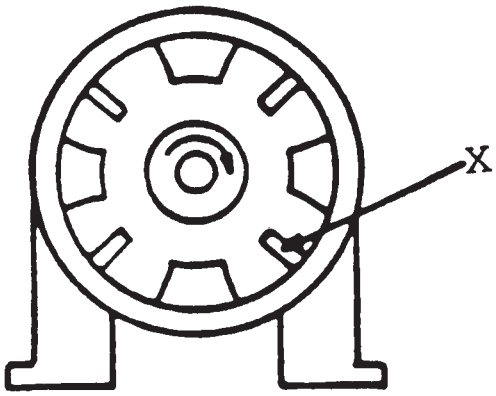

EL-0053

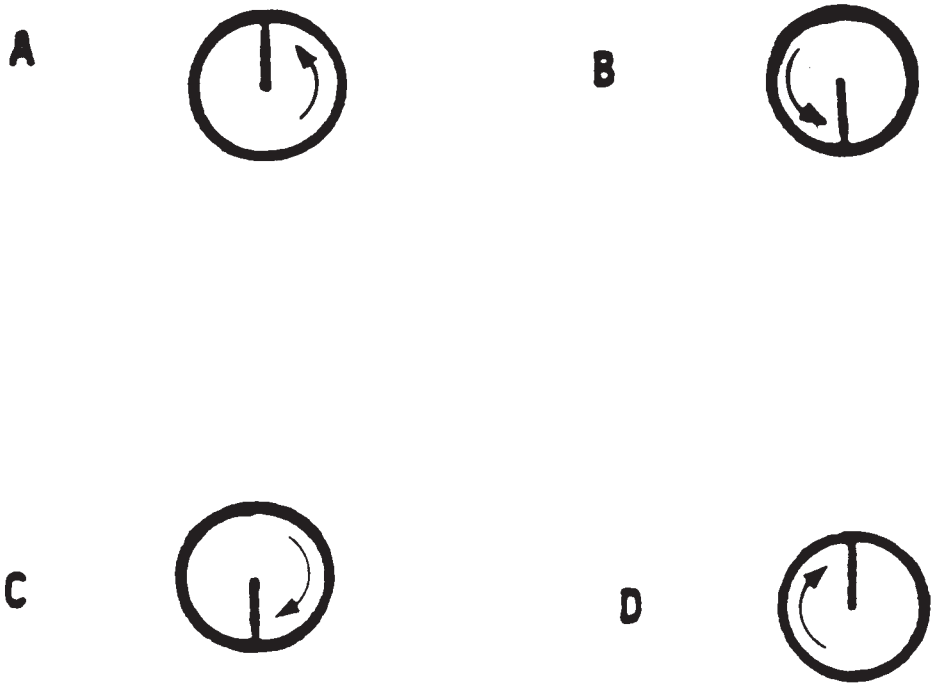

EL-0054

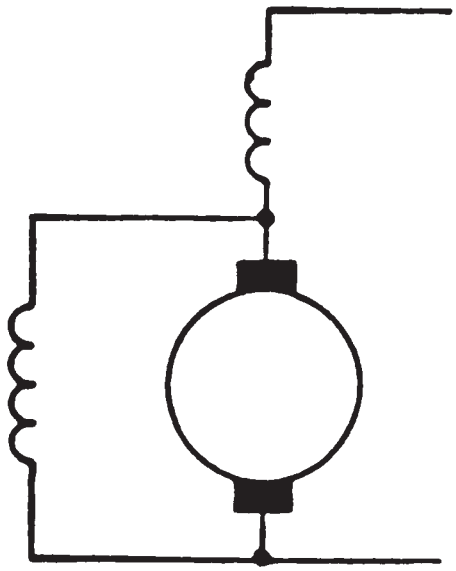

EL-0055

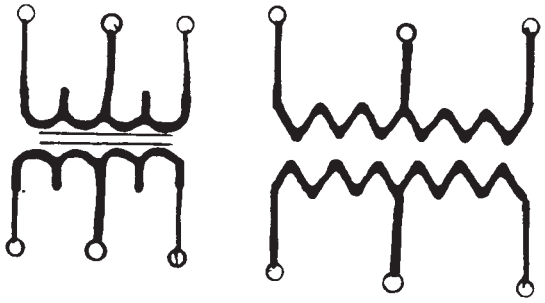

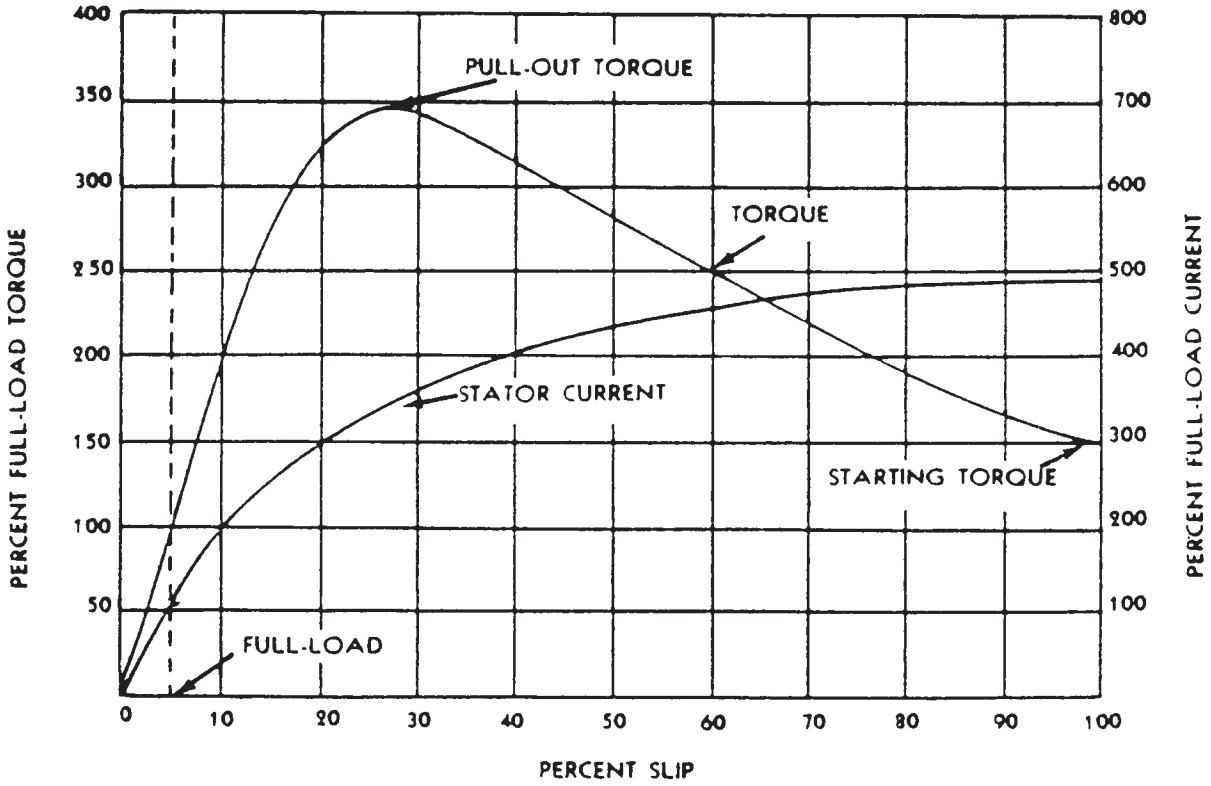

TORQUE AND CURRENT CURVES

EL-0056

EL-0057

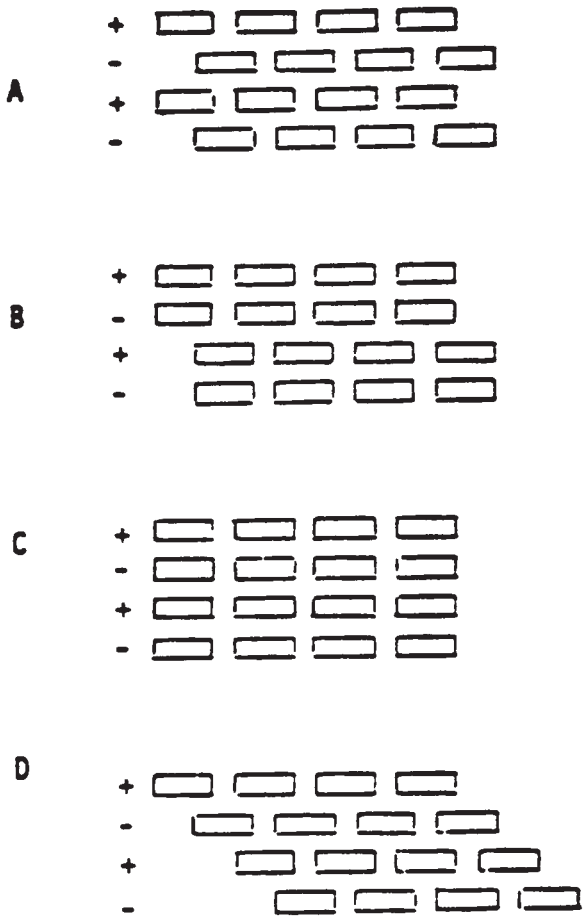

EL-0058

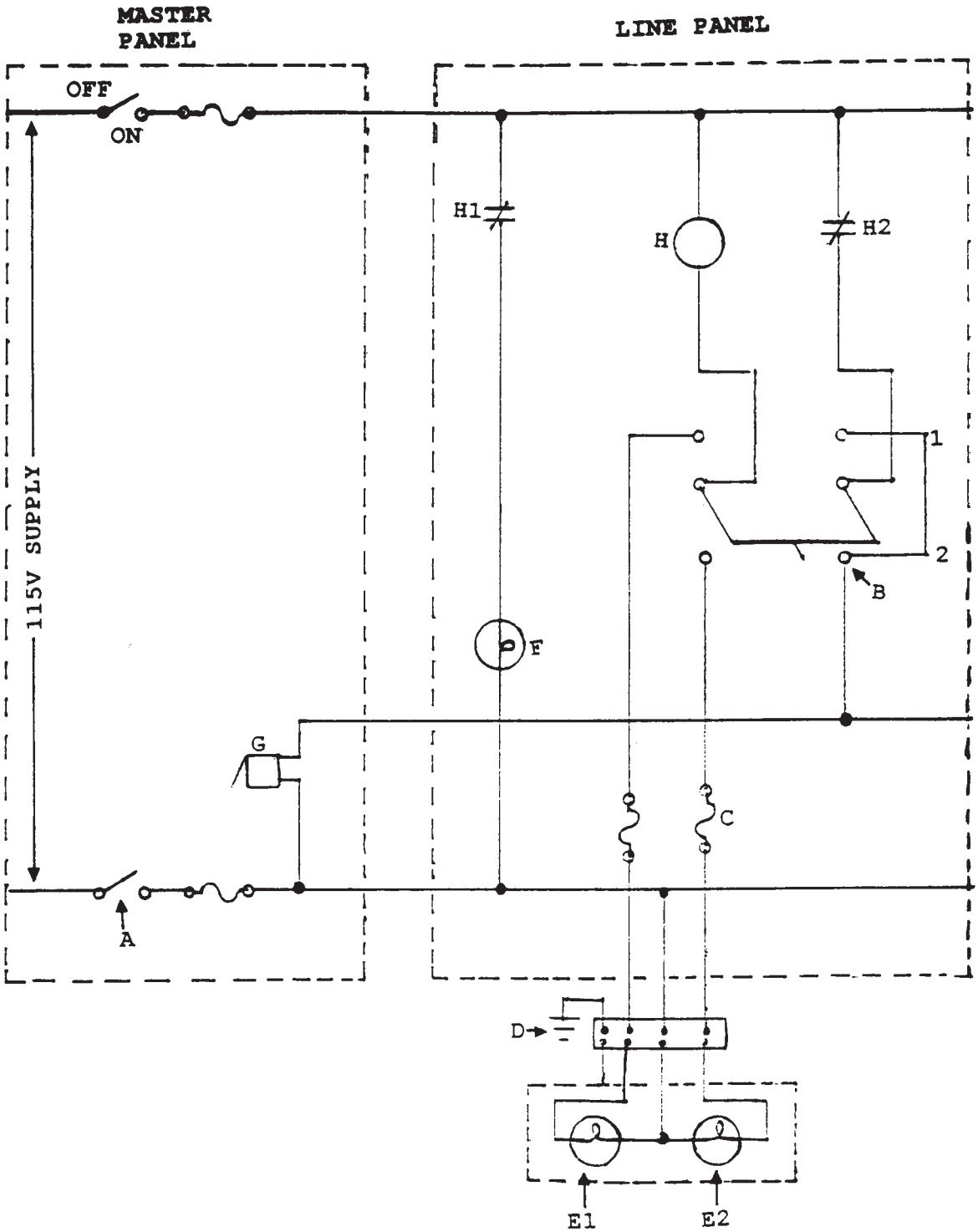
MASTER PANEL
LINE PANEL
OFF
ON
115V SUPPLY
H1
H
H2
1
2
B
F
G
C
A
D
E1
E2

EL-0059

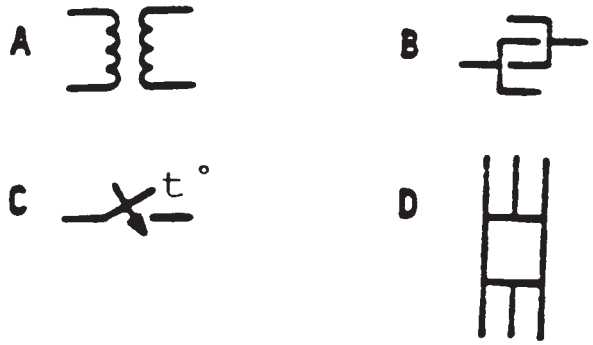

EL-0060

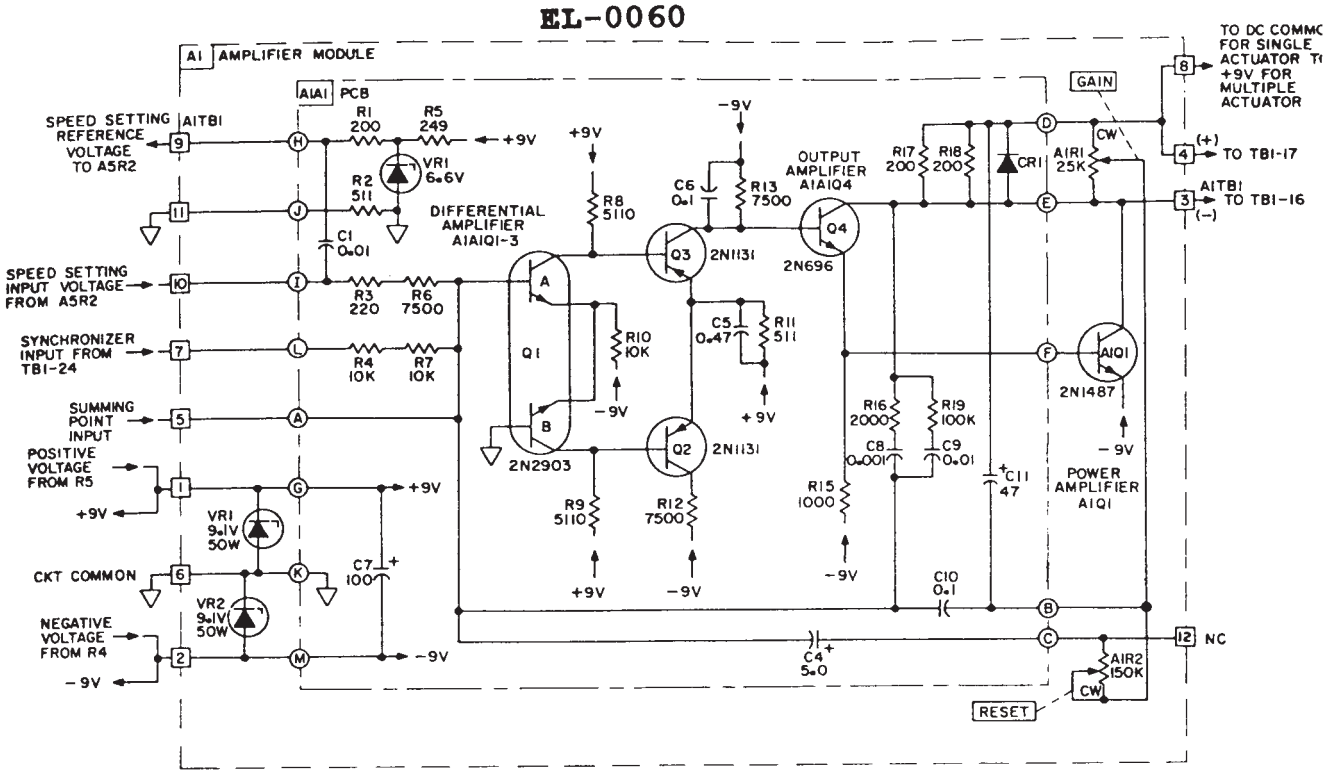

(Courtesy of Woodward)

EL-0061

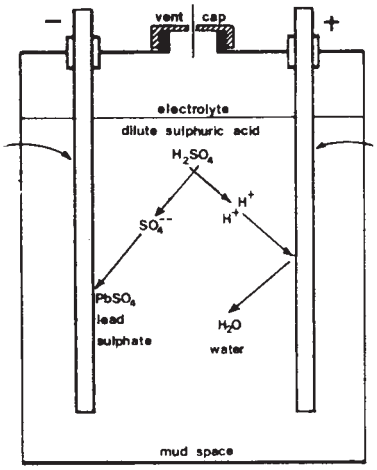

EL-0062

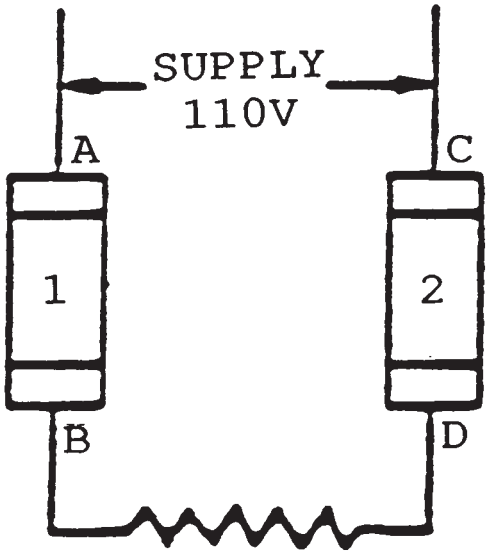

EL-0063

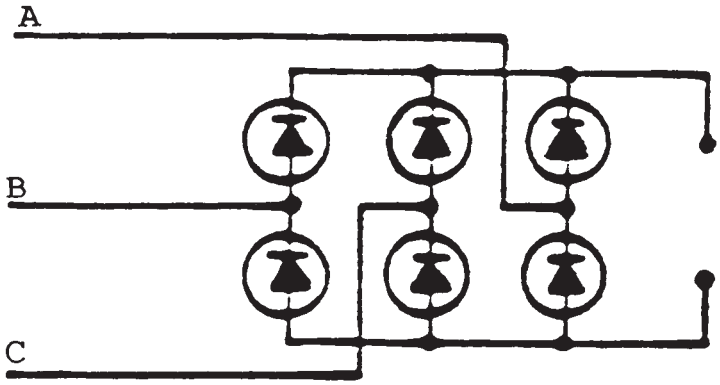

EL-0064

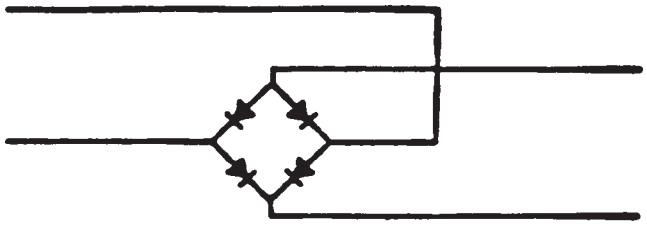

A

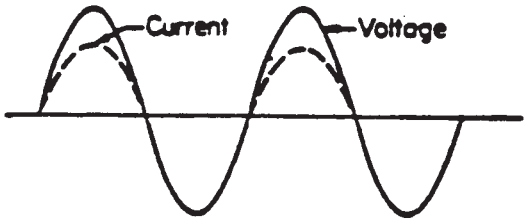
Current
Voltage

B

Voltage
Current

C

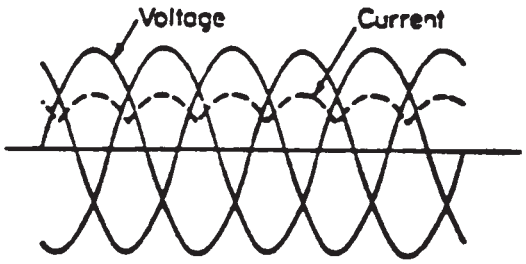
Voltage
Current

D

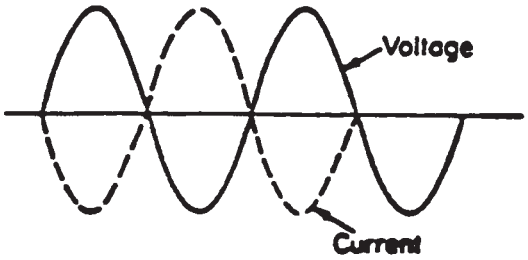
Voltage
Current

EL-0065

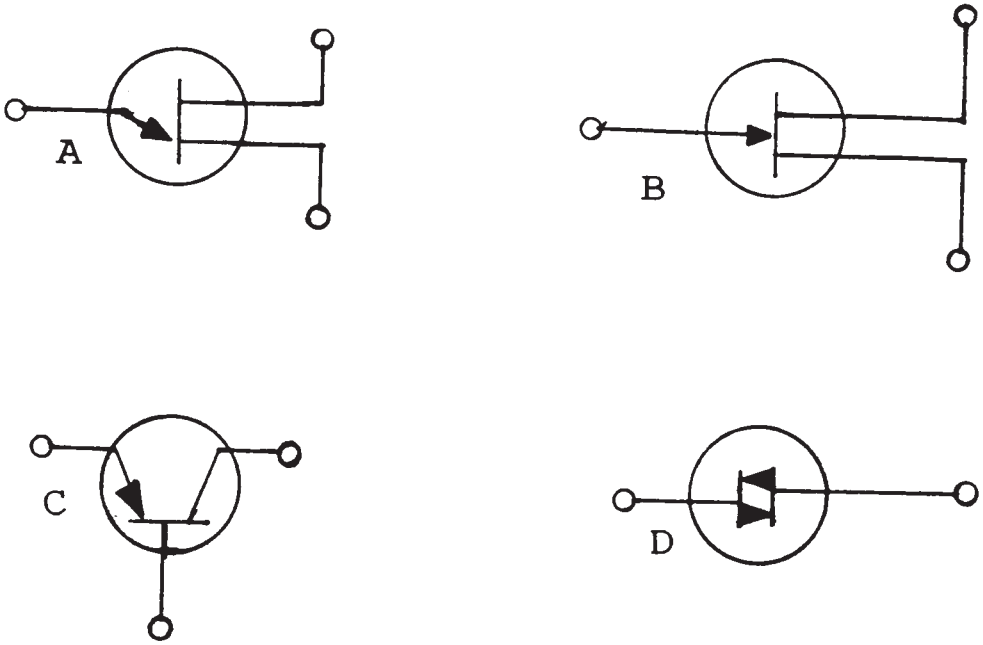

EL-0066

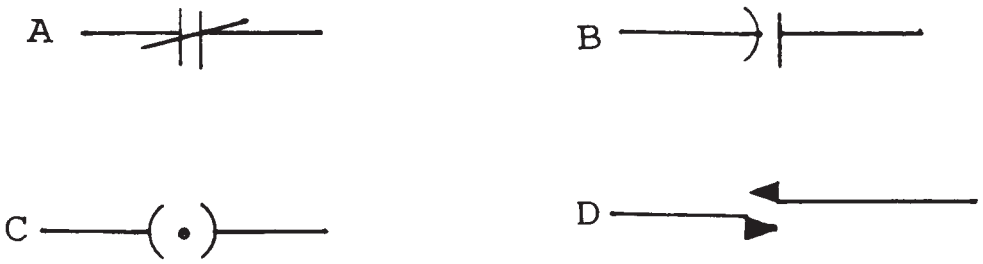

EL-0067

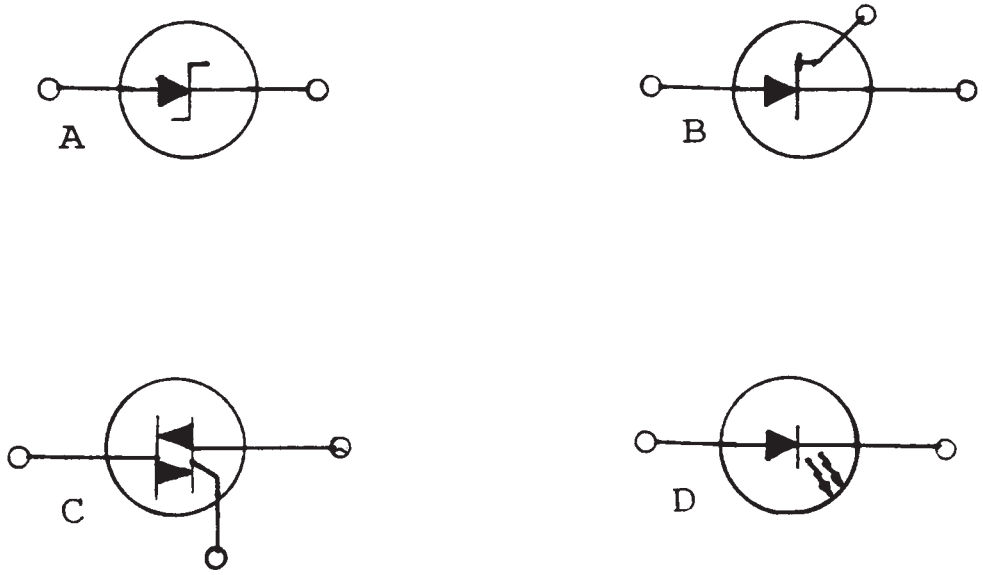

EL-0068

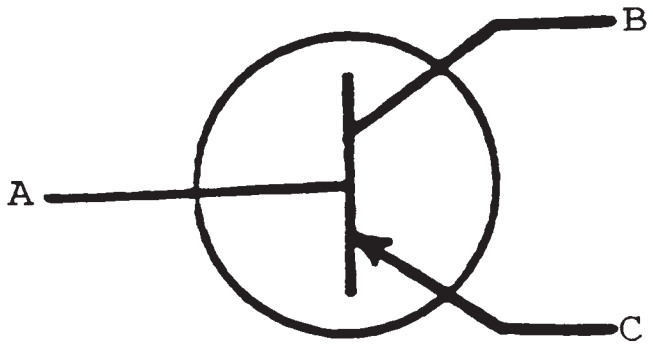

EL-0069

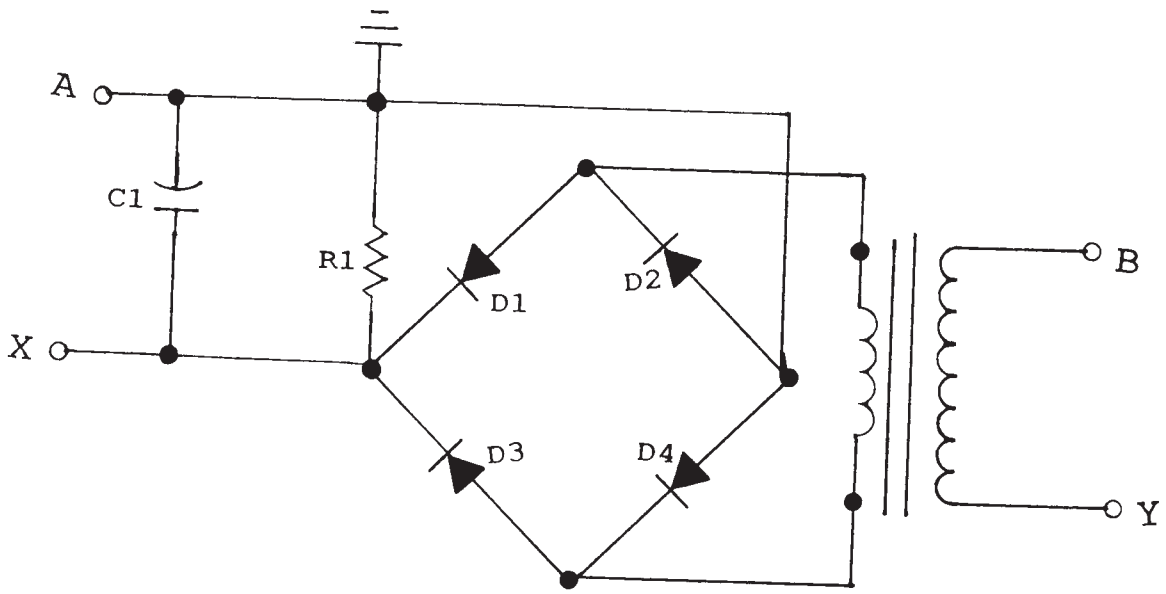

EL-0070

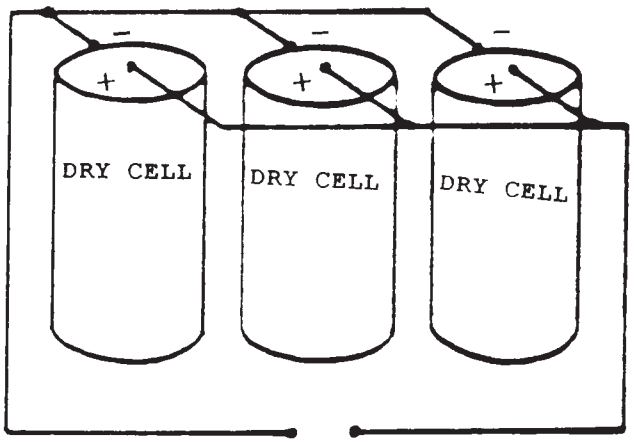

EL-0071

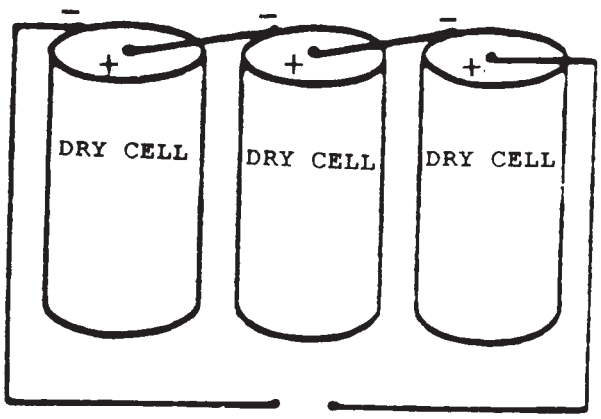

EL-0072

CONTACTS	INPUT		OUTPUT
	A	B	Z
VOLTAGE	1	0	1
	0	1	1
	1	1	1
	0	0	0

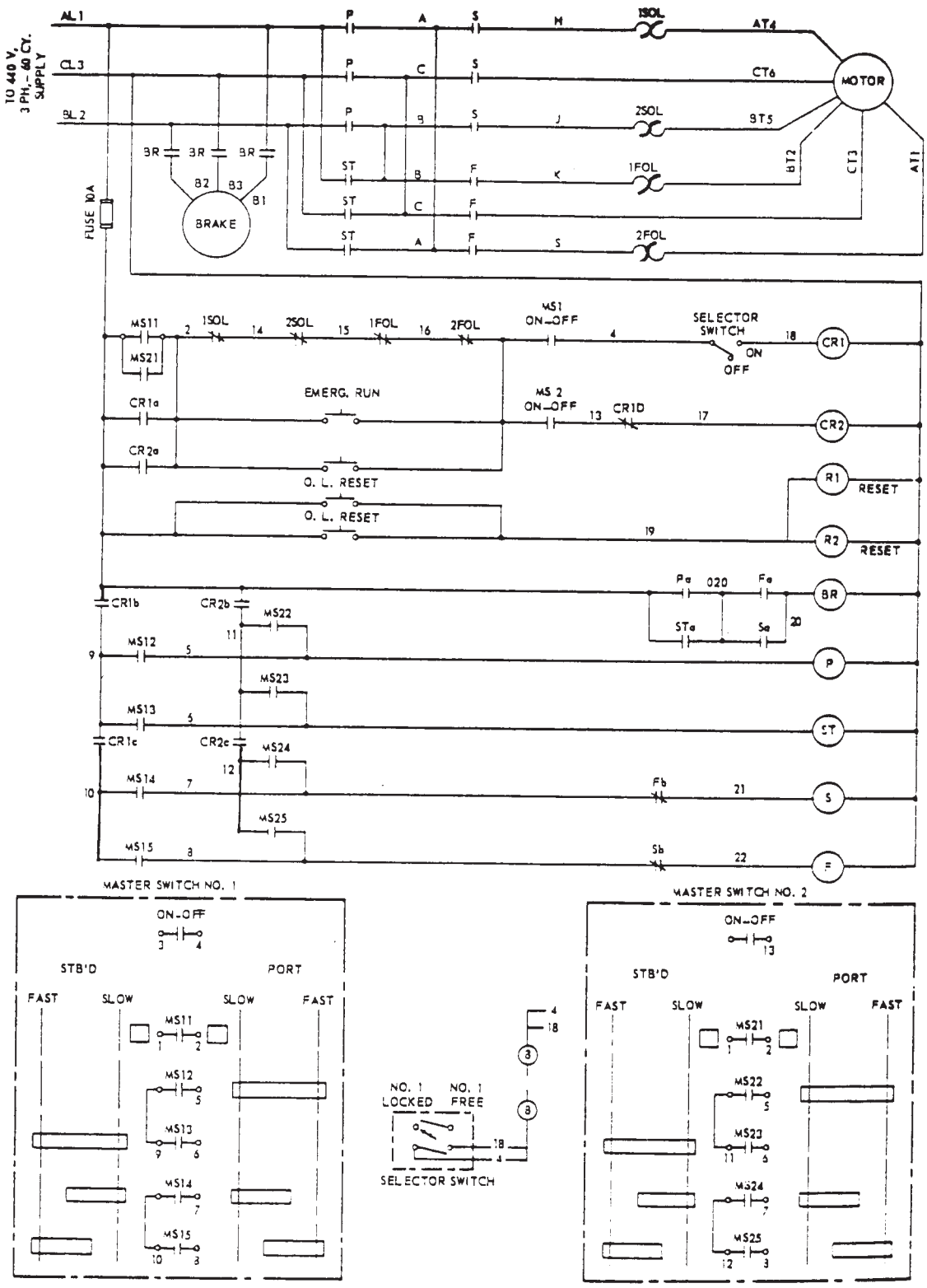

Reversing across-the-line starter for two-speed anchor windlass

EL-0074

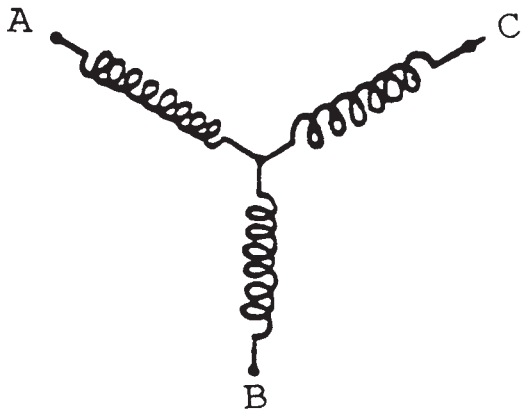
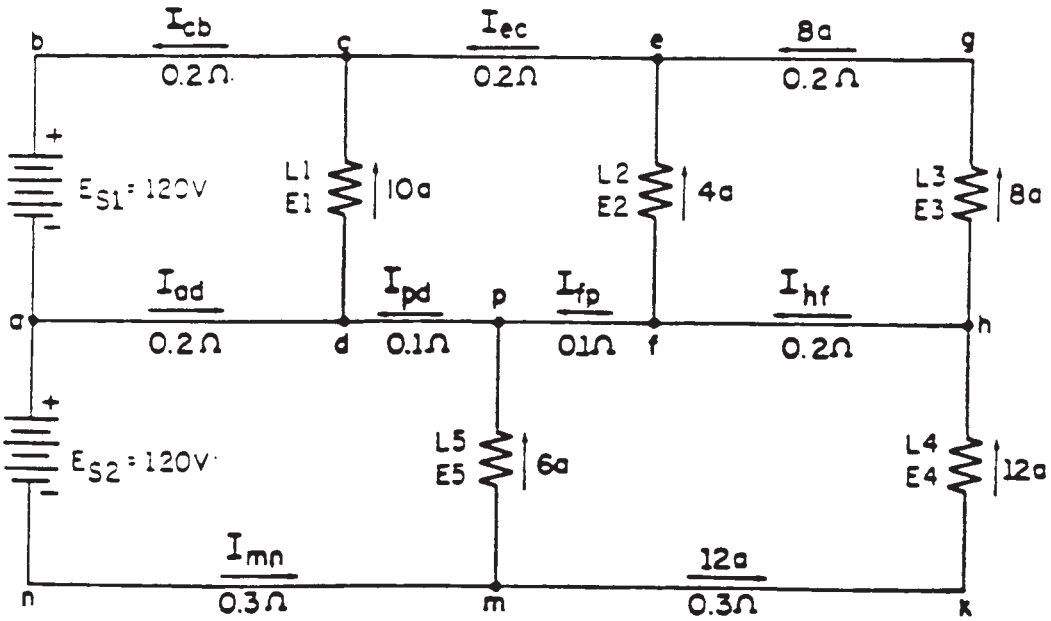
EL-0075