EL-0021

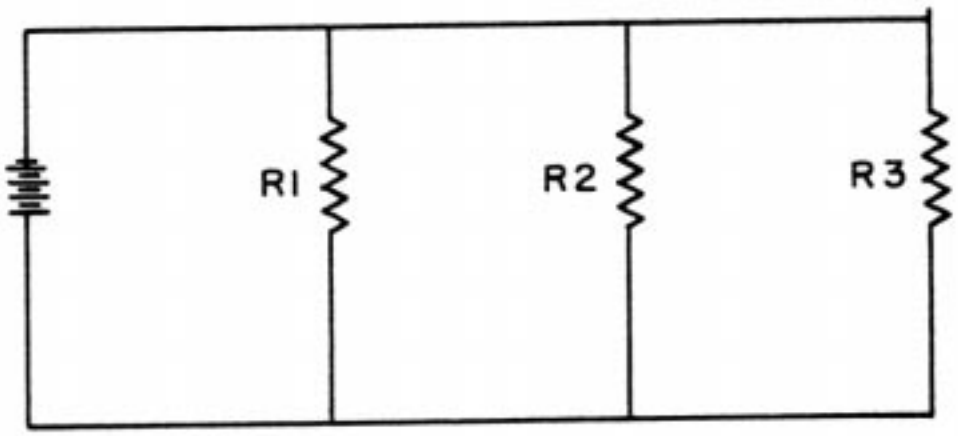

EL-0022

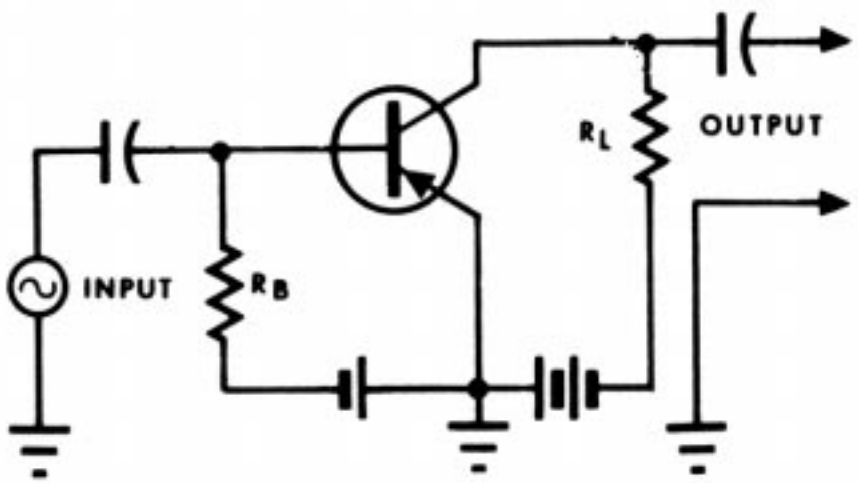

EL-0023

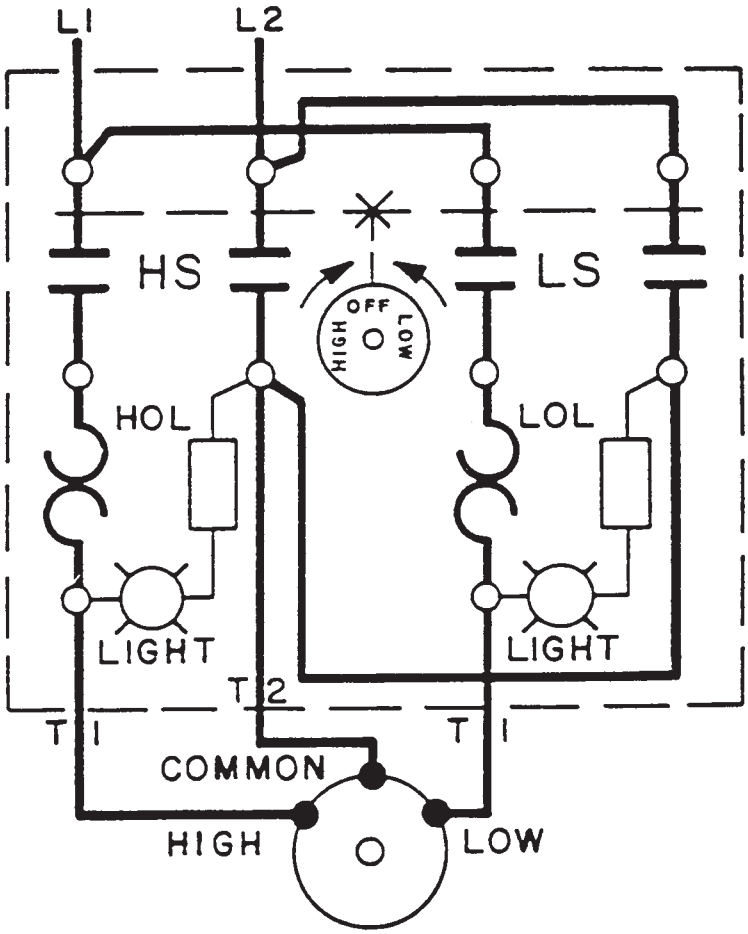

EL-0024

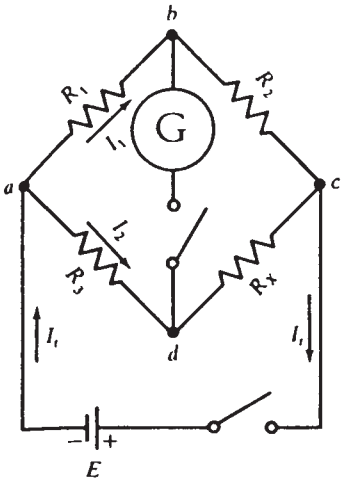

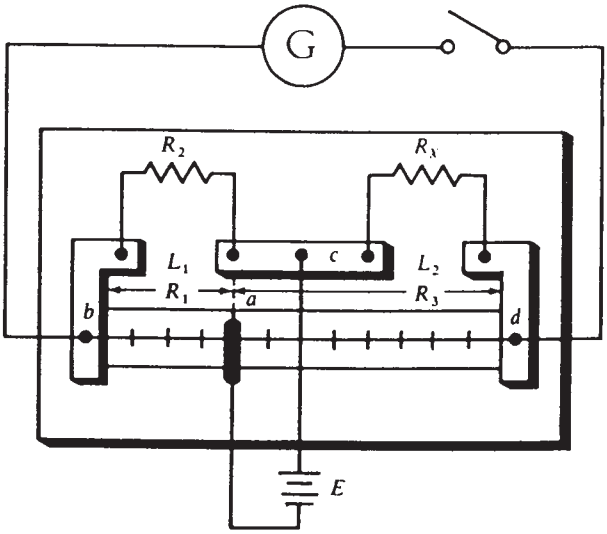

(b)

EL-0025

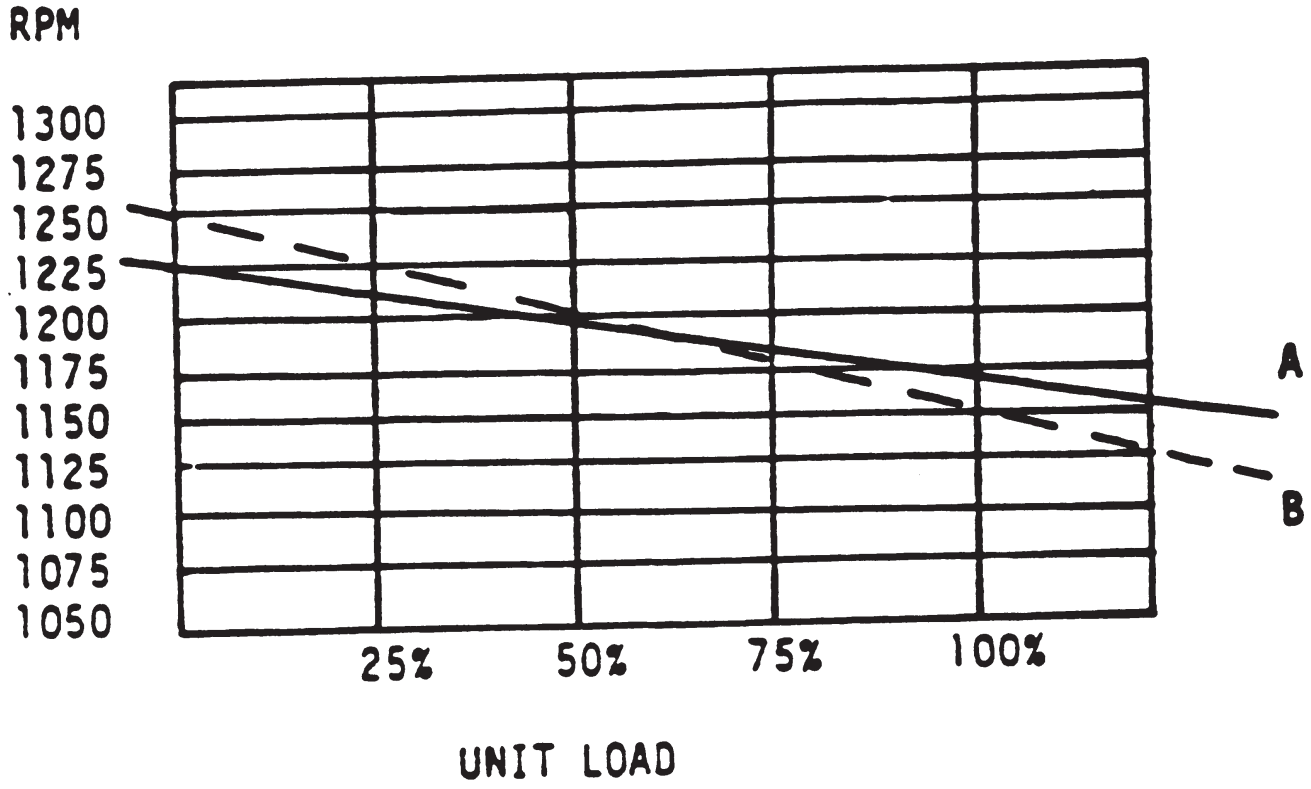

EL-0026

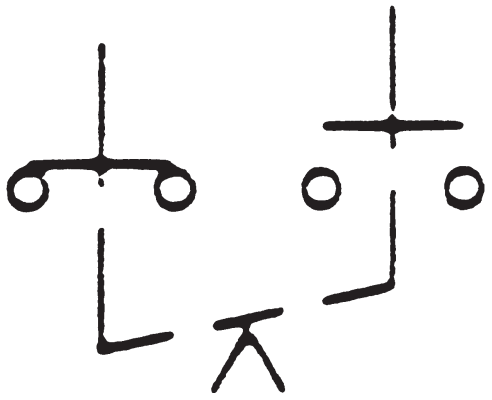

EL-0027

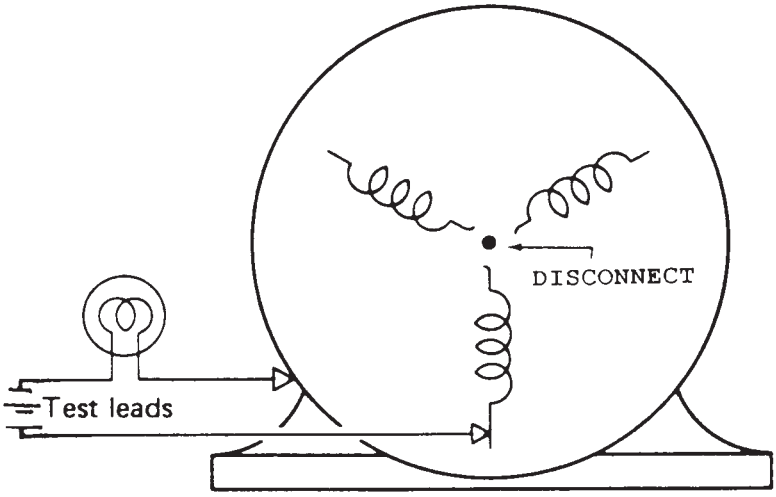

A

EL-0028

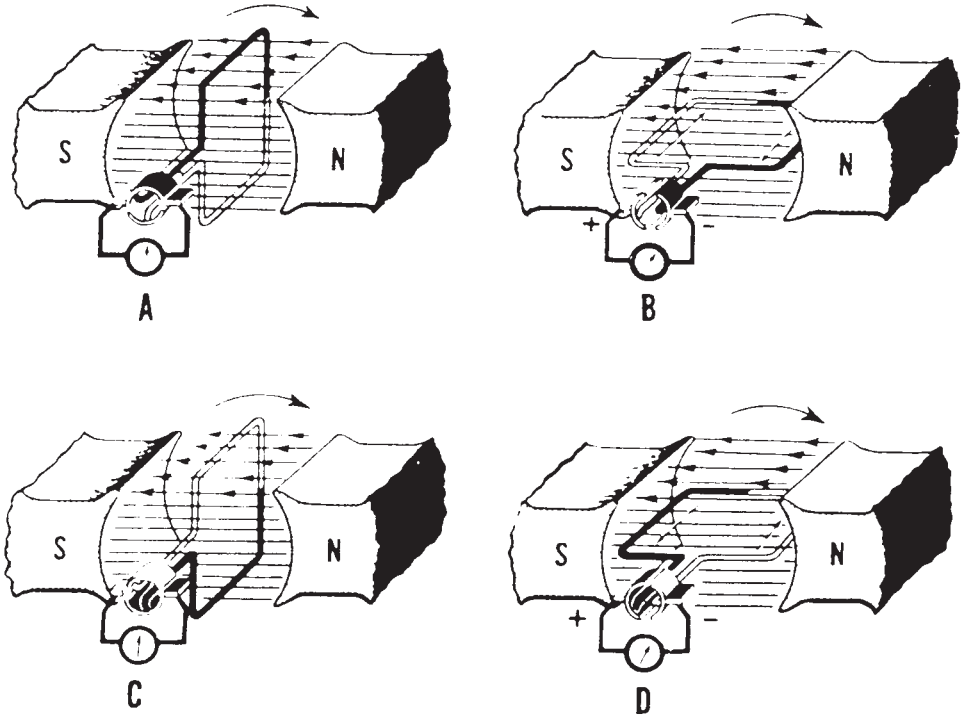

EL-0029

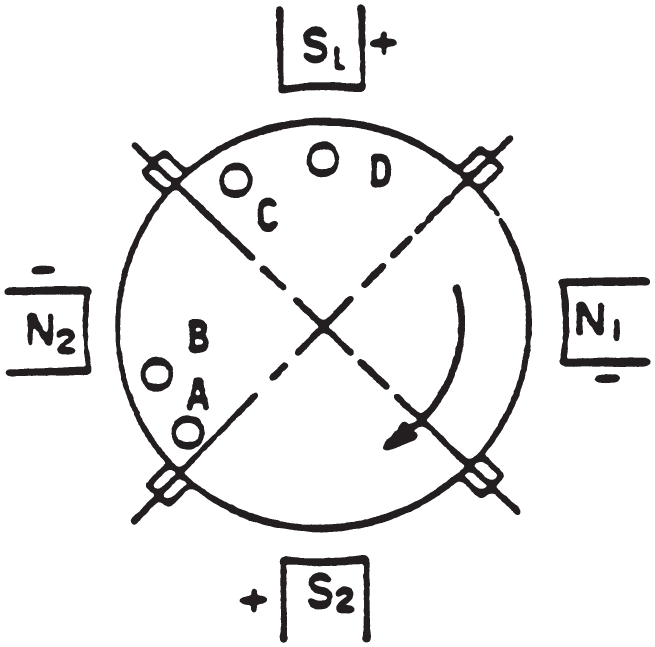

EL-0030

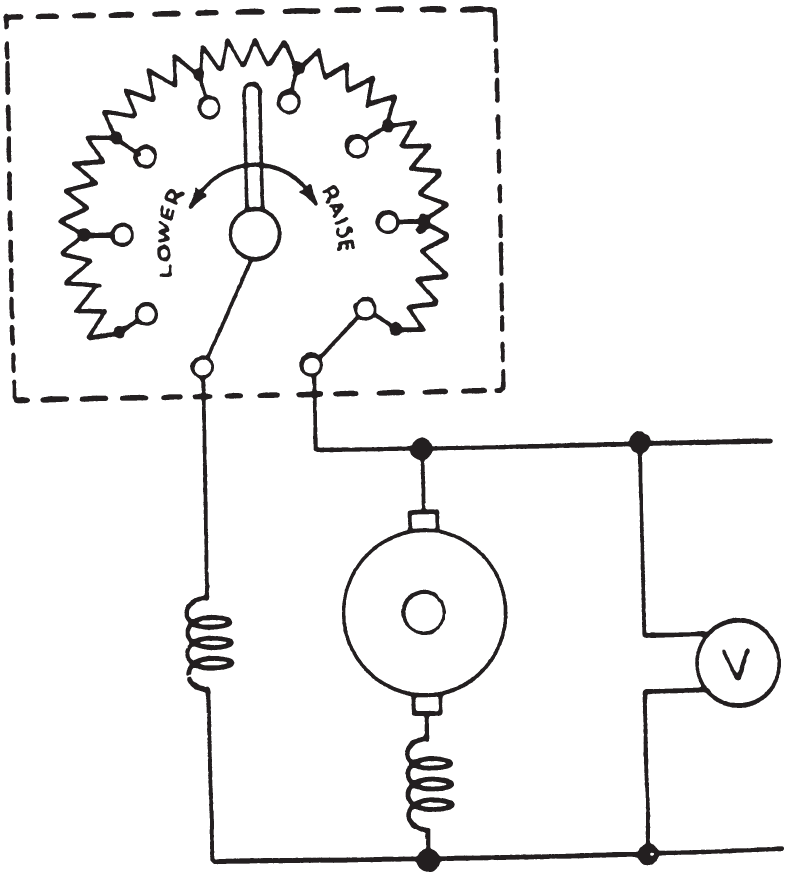

EL-0031

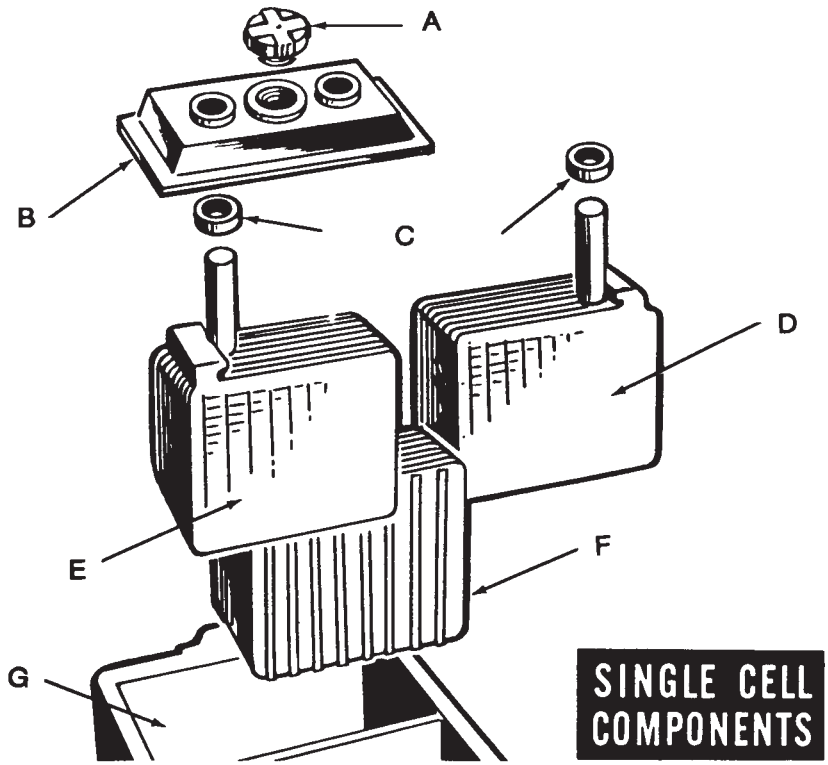

EL-0032

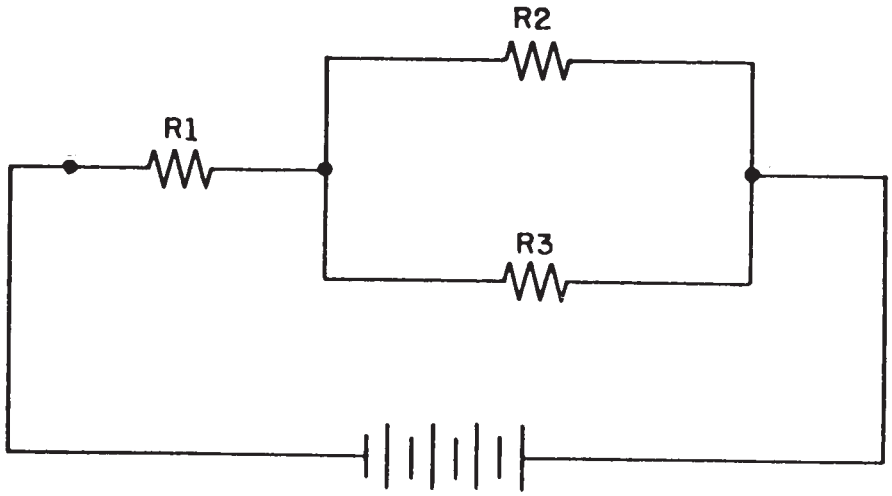

EL-0033

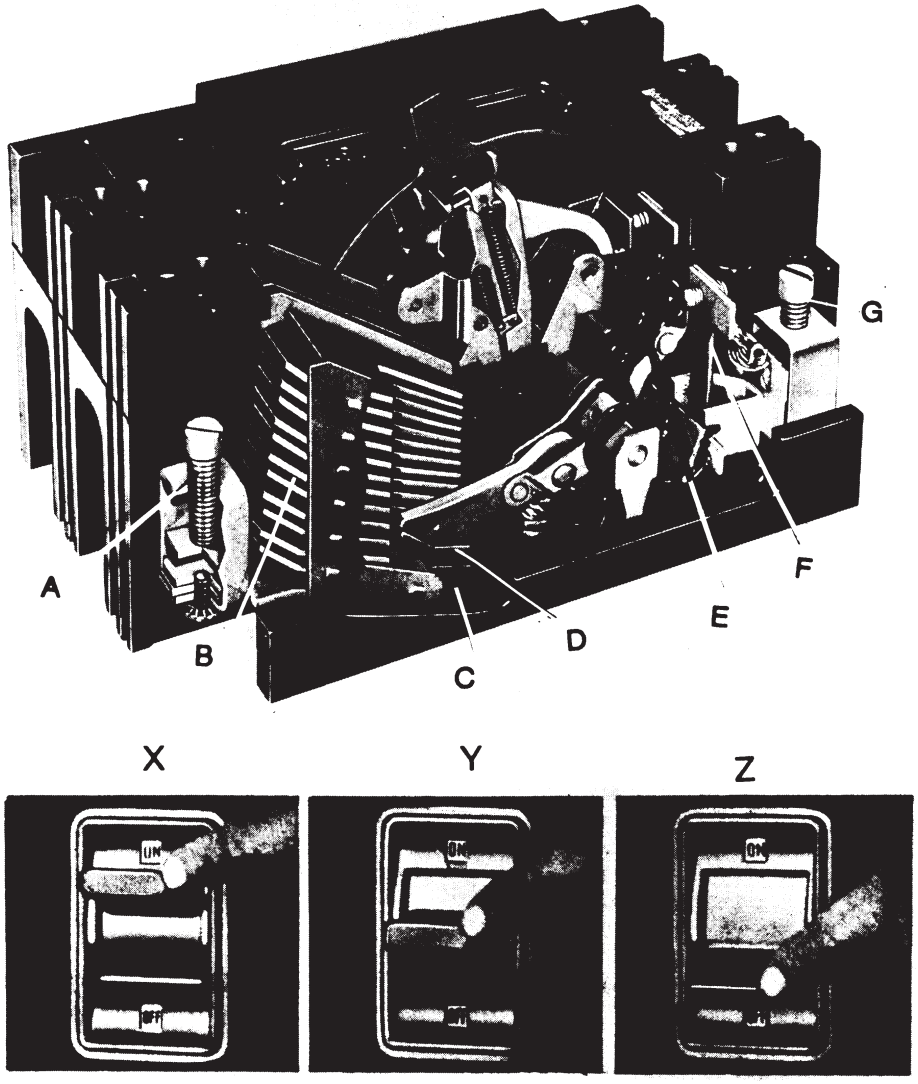

EL-0034

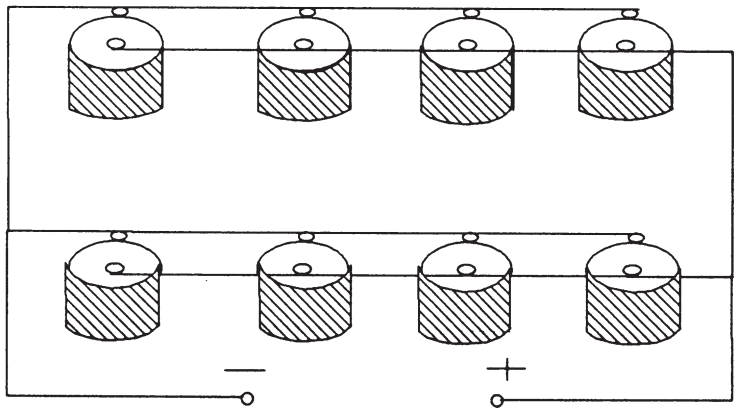

EL-0035

FUNCTION	SYMBOL	TRUTH TABLE INPUT	
		A	B
AND	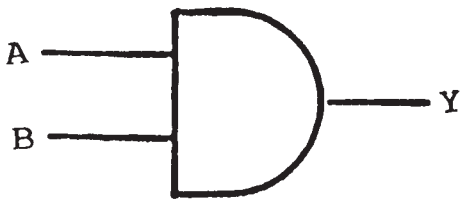	1	1
		1	0
		0	1
		0	0

EL-0036

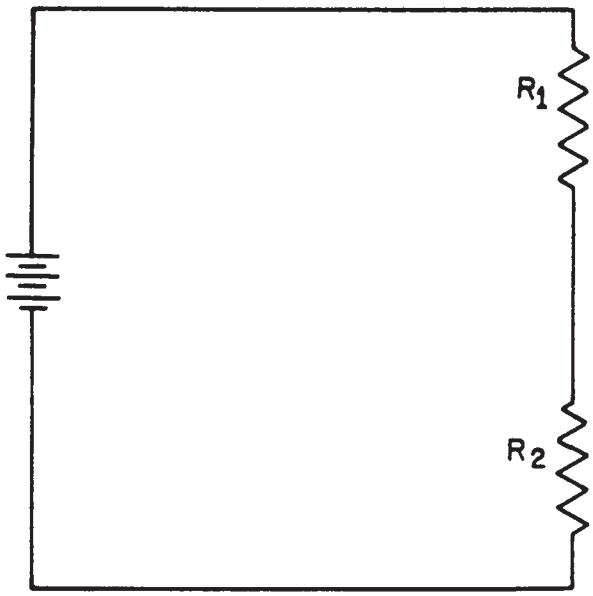

EL-0037

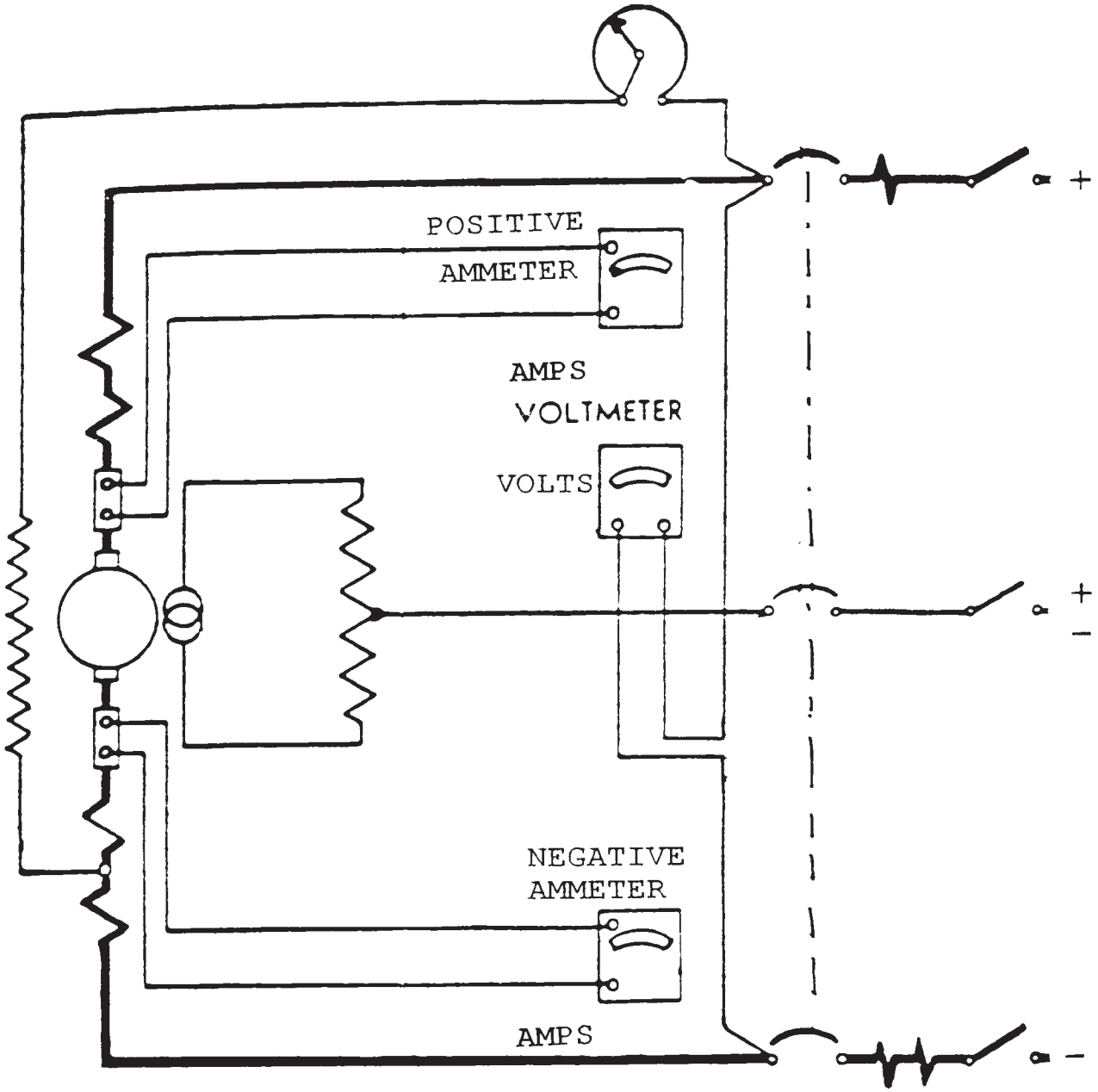
POSITIVE
AMMETER
AMPS
VOLTMETER
VOLTS
NEGATIVE
AMMETER
AMPS
+
+
−
−

EL-0038

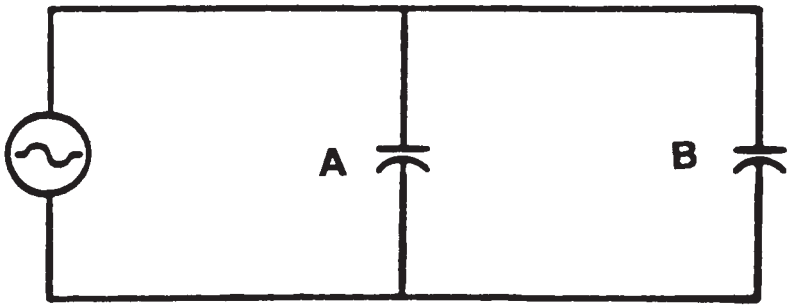

EL-0039

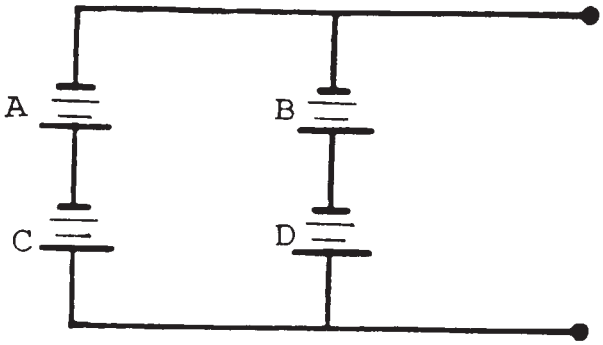

EL-0040

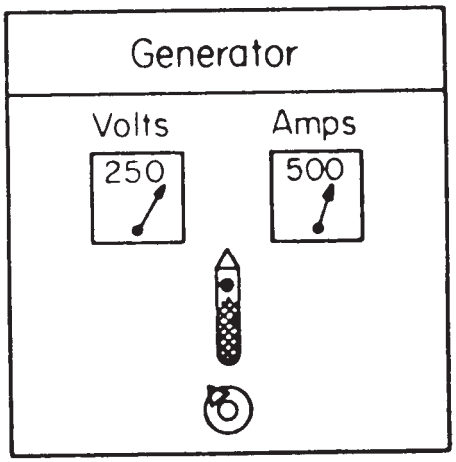

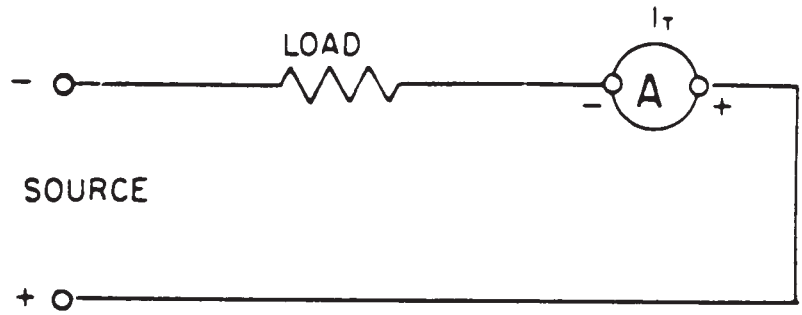

(A) SERIES CIRCUIT

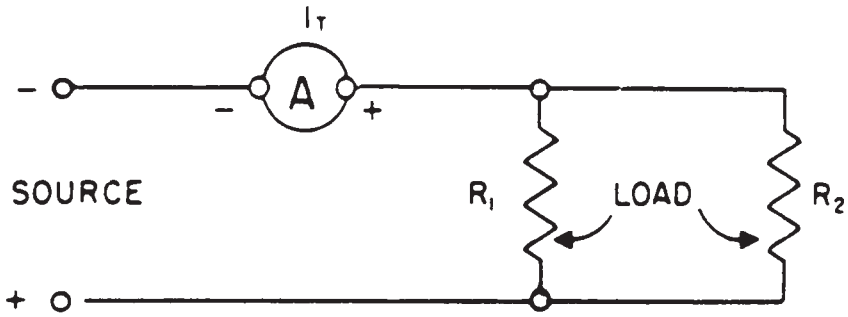

(B) PARALLEL CIRCUIT

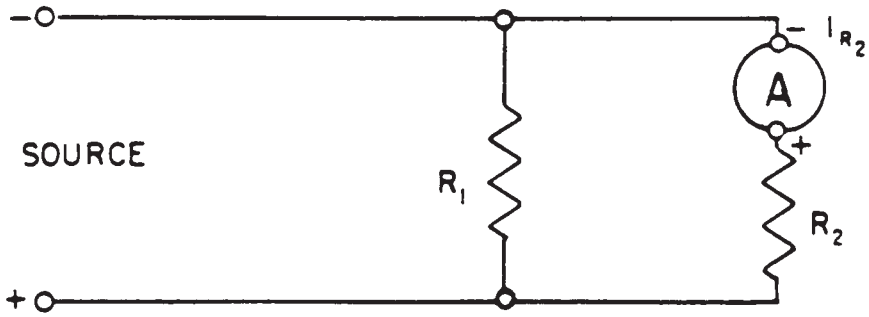

(C) PARALLEL CIRCUIT

EL-0042

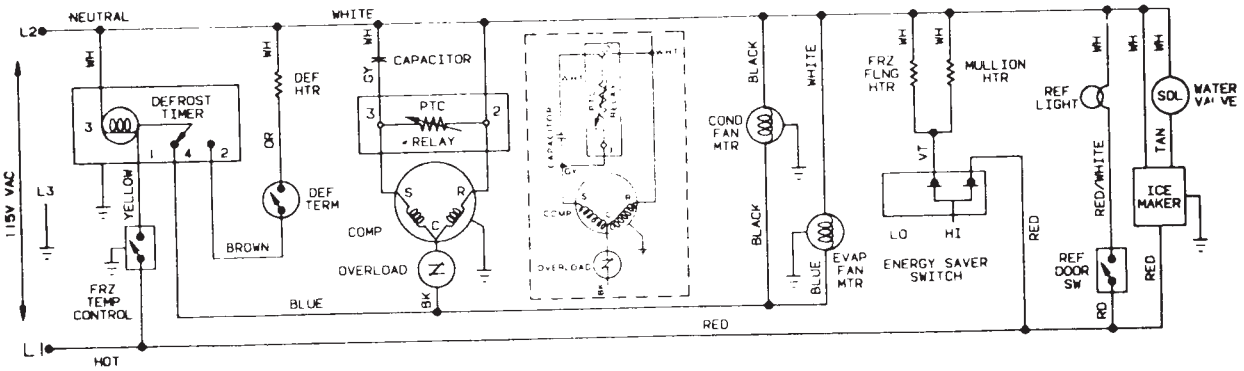

EL-0043

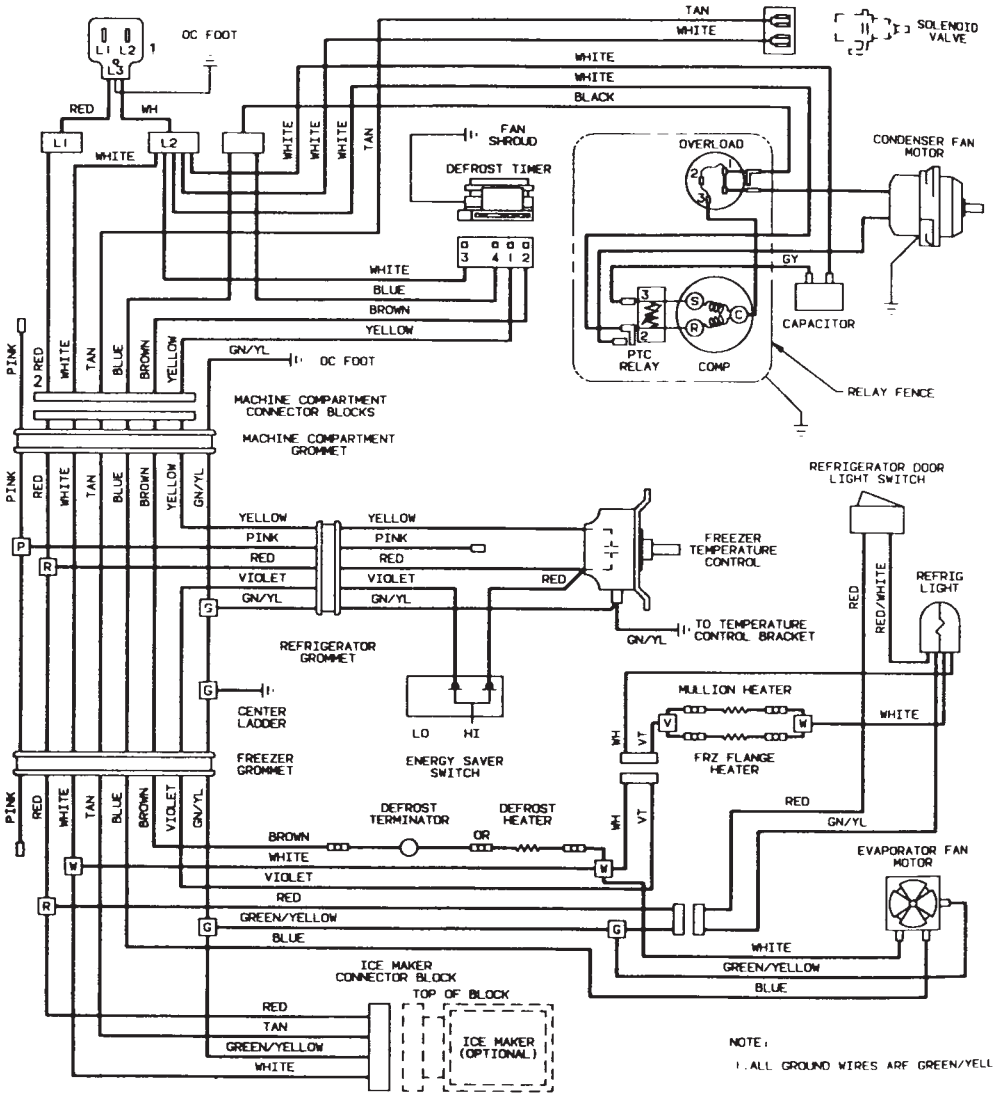

EL-0044

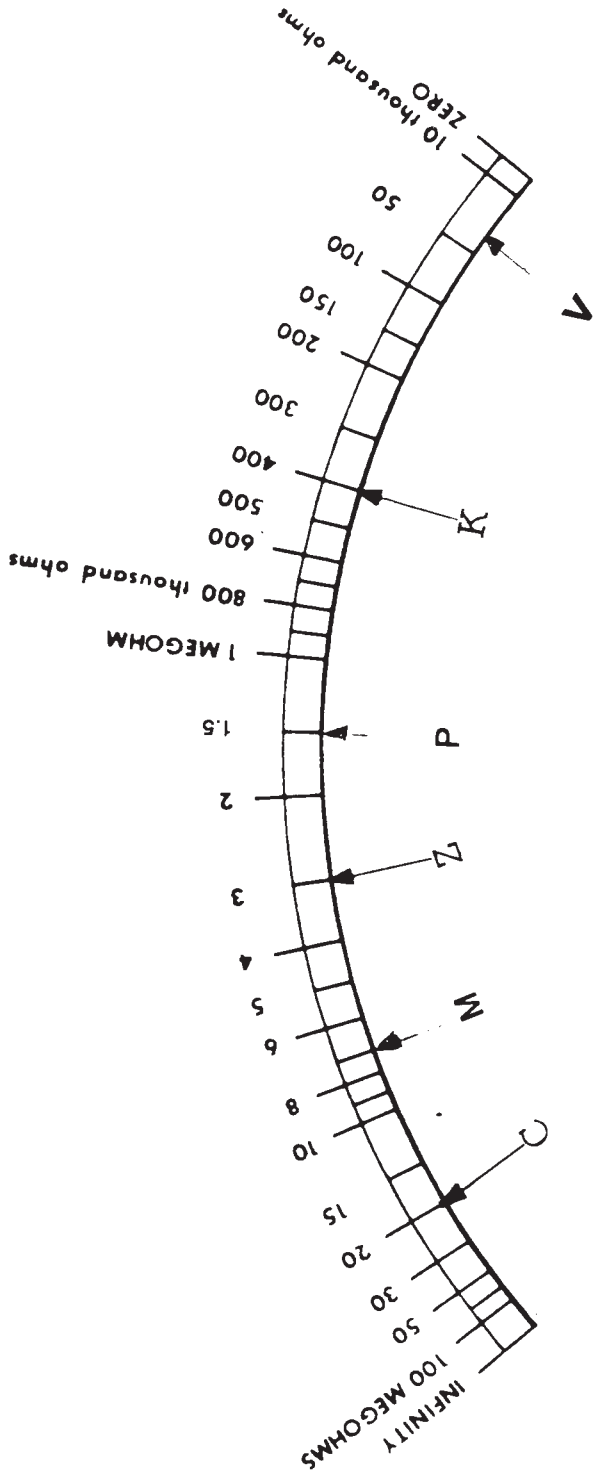
INFINITY
100 MEGOHMS
50
30
20
15
10
8
6
5
4
3
2
1.5
1 MEGOHM
800 thousand ohms
600
500
400
300
200
150
100
50
10 thousand ohms
ZERO
C
M
LV
D
K
V

EL-0045

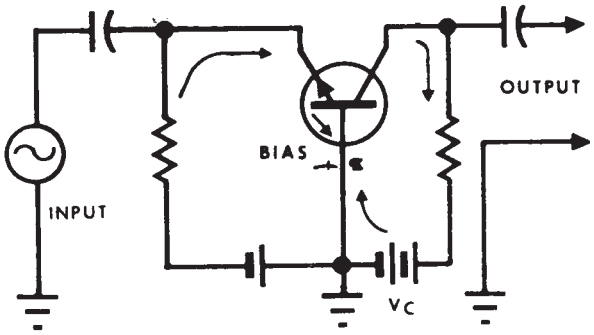

EL-0046

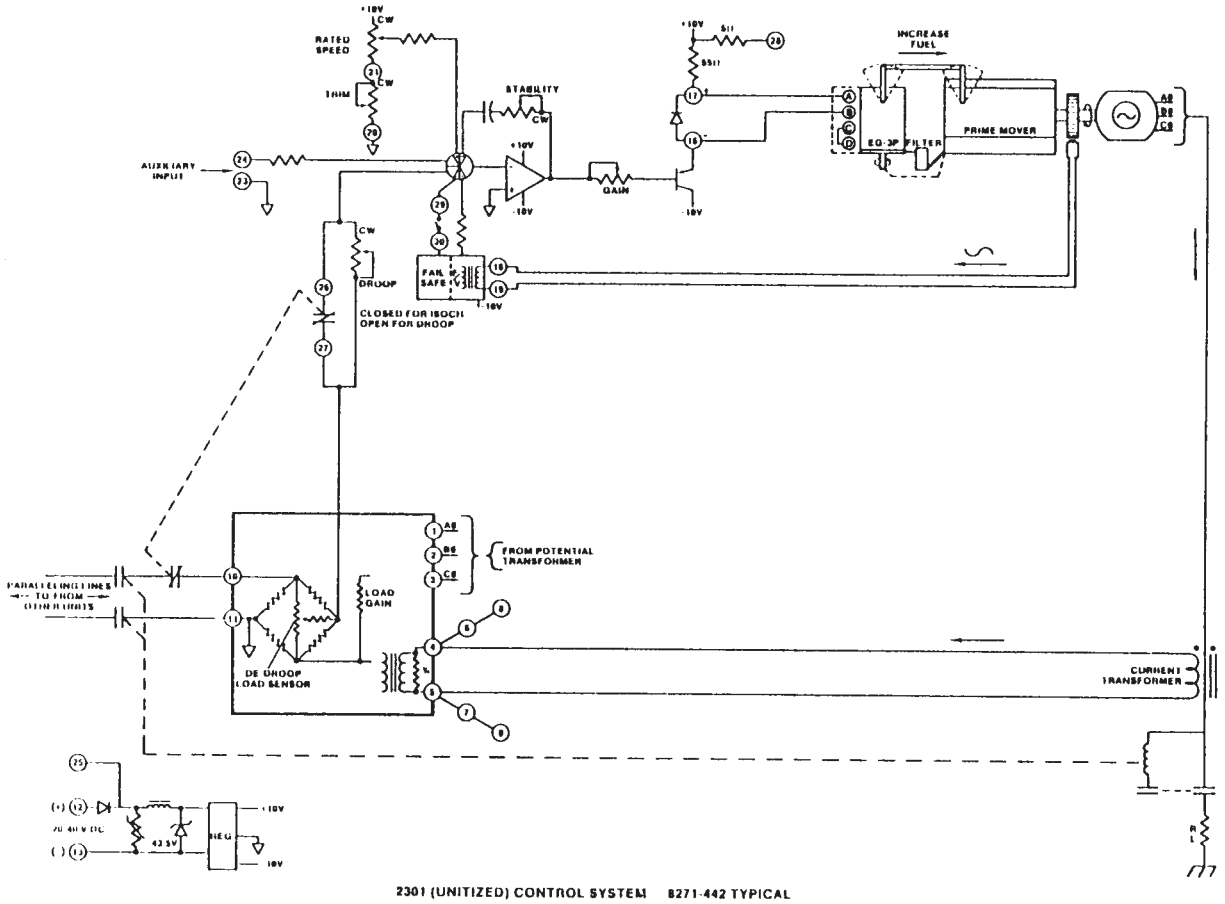

2301 (UNITIZED) CONTROL SYSTEM 8271-442 TYPICAL

(Courtesy of Woodward)

EL-0047

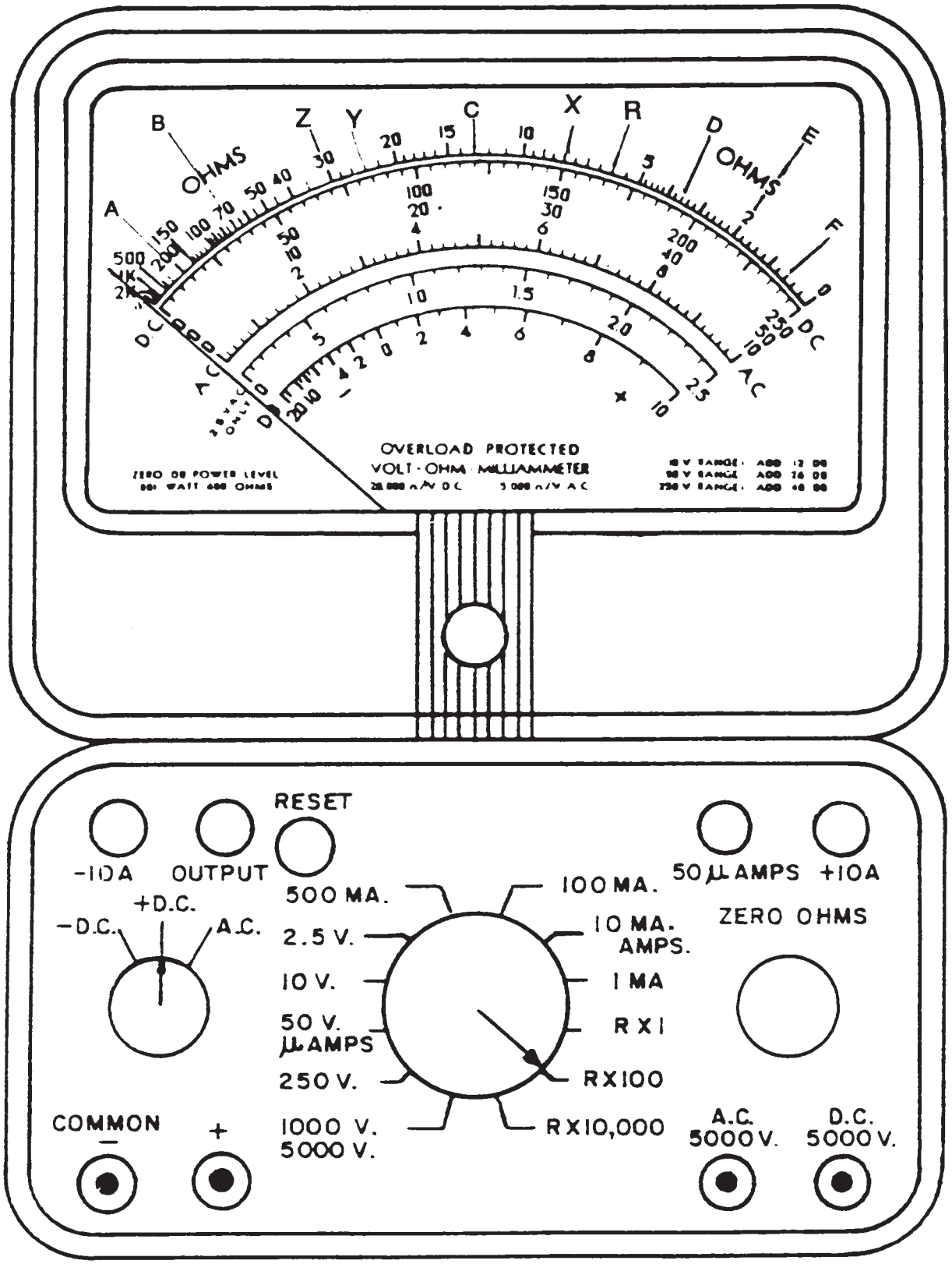
OVERLOAD PROTECTED
VOLT-OHM MILLIAMMETER
ZERO DB POWER LEVEL
OHMS
D.C.
A.C.
RESET
-10A
OUTPUT
+10A
50 µ AMPS
+D.C.
-D.C.
A.C.
500 MA.
2.5 V.
10 V.
50 V.
µ AMPS
250 V.
1000 V.
5000 V.
100 MA.
10 MA.
AMPS.
1 MA
R X 1
RX100
RX10,000
ZERO OHMS
COMMON
-
+
A.C.
5000 V.
D.C.
5000 V.