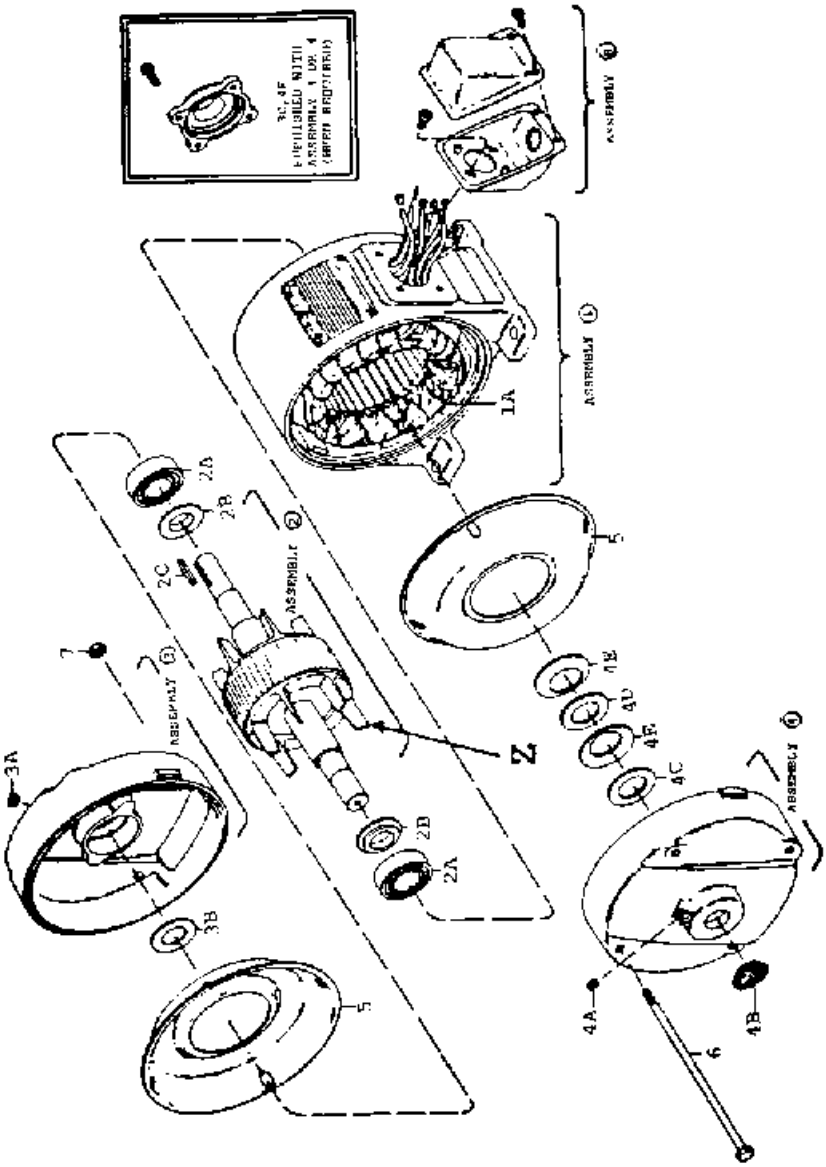
1A
ASSEMBLY ①
ASSEMBLY ②
ASSEMBLY ③
ASSEMBLY ④
ASSEMBLY ⑤
ASSEMBLY ⑥
2A
2B
2C
3A
3B
4A
4B
4C
4D
4E
4F
5
6
7
Z

EL 0001

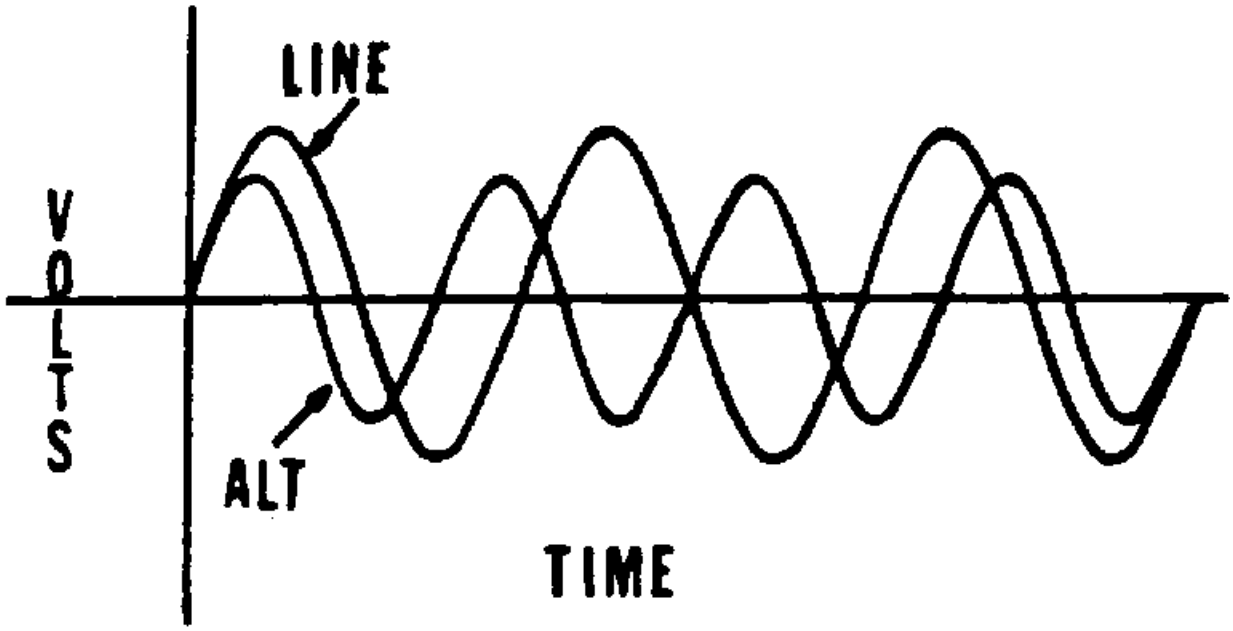

EL-0002

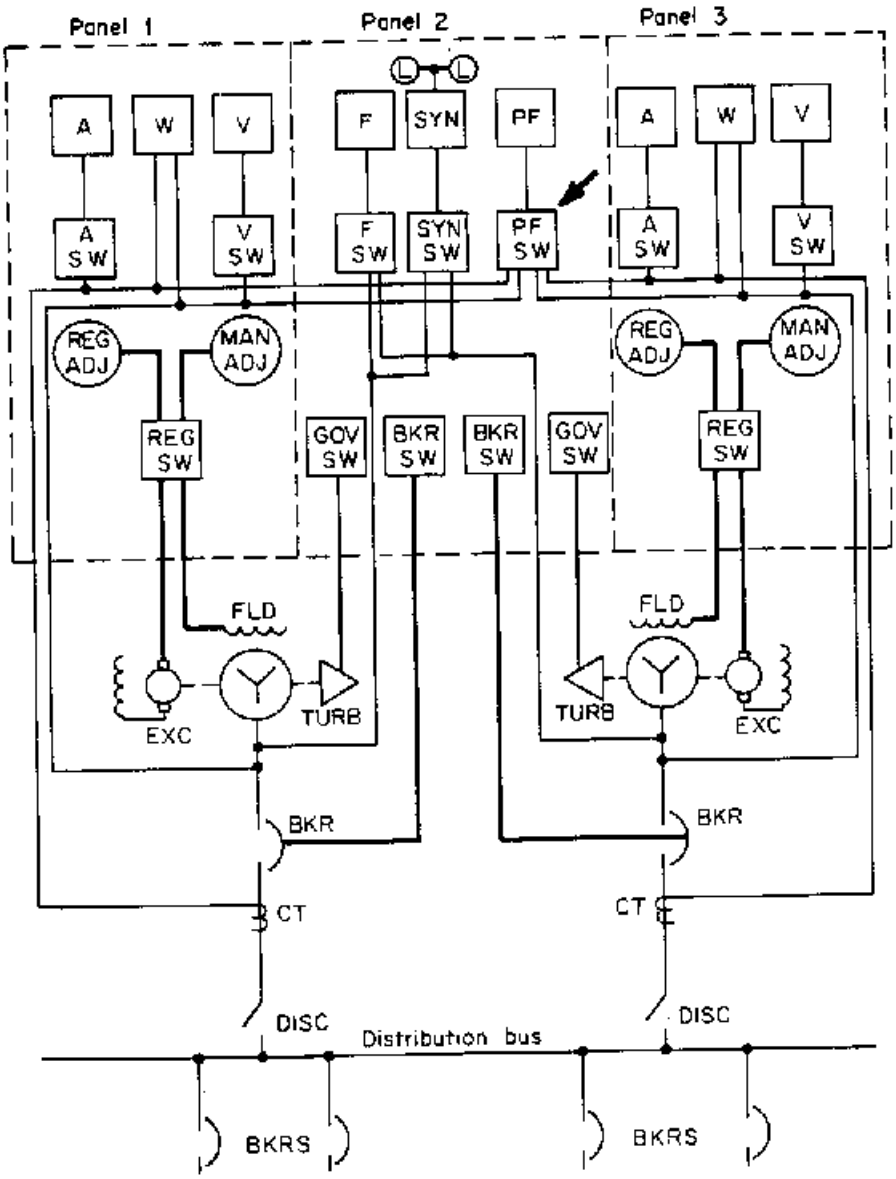
Panel 1
Panel 2
Panel 3
A
W
V
F
SYN
PF
A SW
V SW
F SW
SYN SW
PF SW
REG ADJ
MAN ADJ
REG SW
GOV SW
BKR SW
FLD
EXC
TURB
BKR
CT
DISC
Distribution bus
BKRS

1-3

EL- 0003

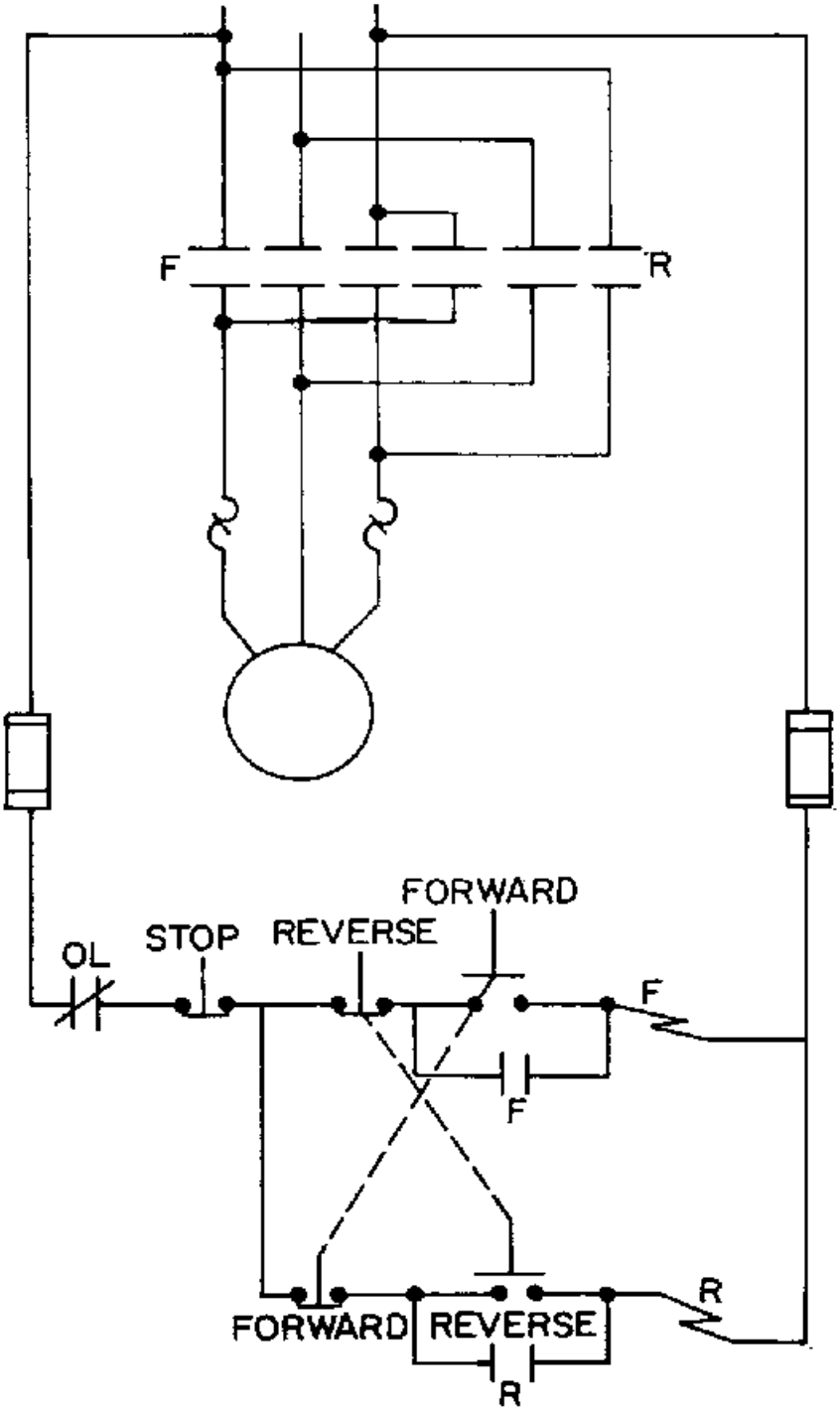

1-4

EL - 0004

A

B

C

D

EL-0005

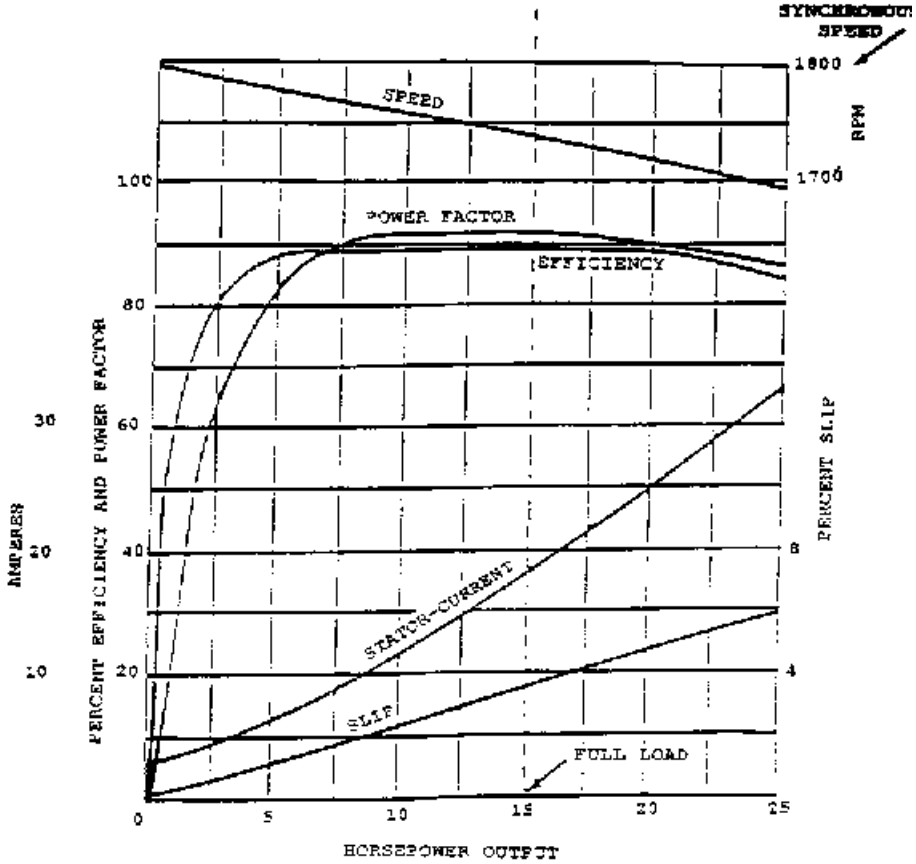

PERFORMANCE CURVES FOR 4-POLE 3-PHASE
440-VOLT 15-HP CAGE-ROTOR MOTOR

EL 0006

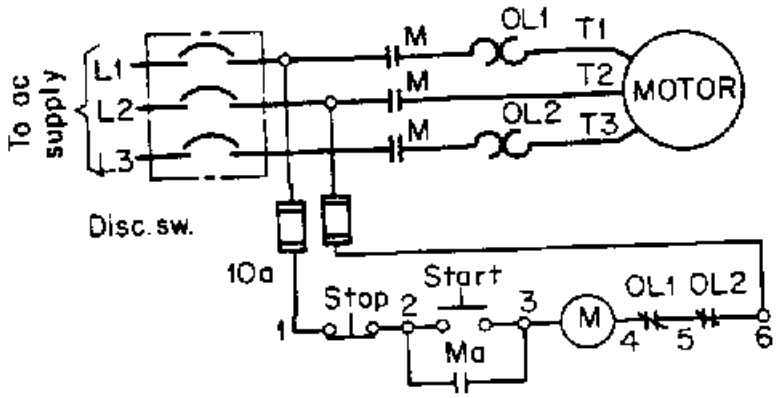

EL-0007

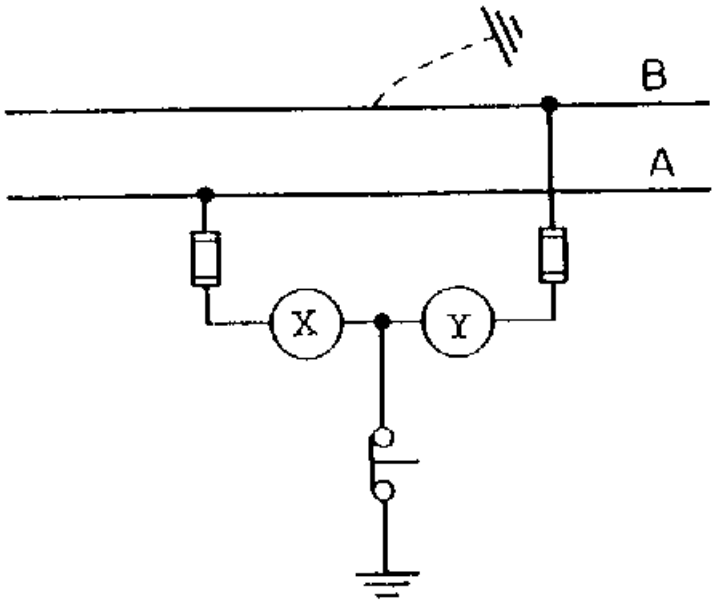

EL-0008

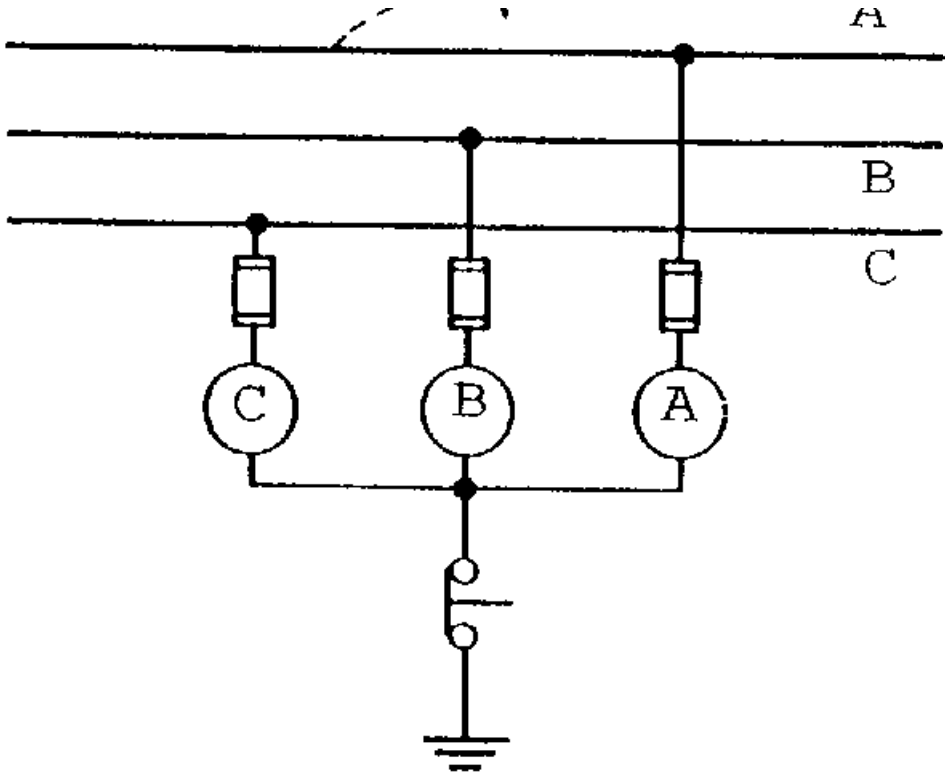

EL-0009

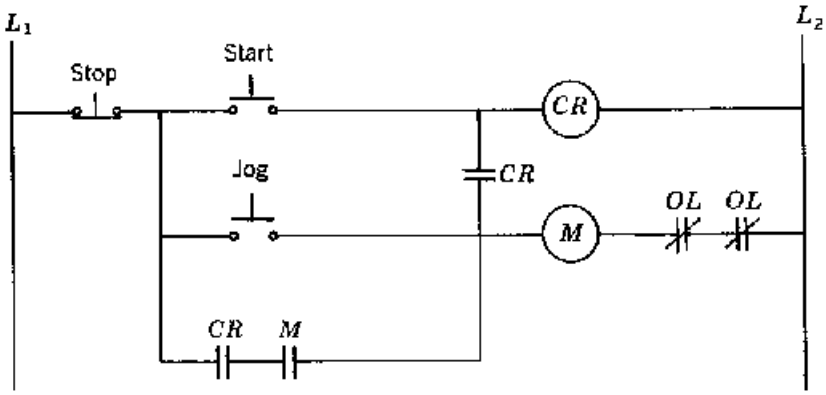

1-8

EL-0010

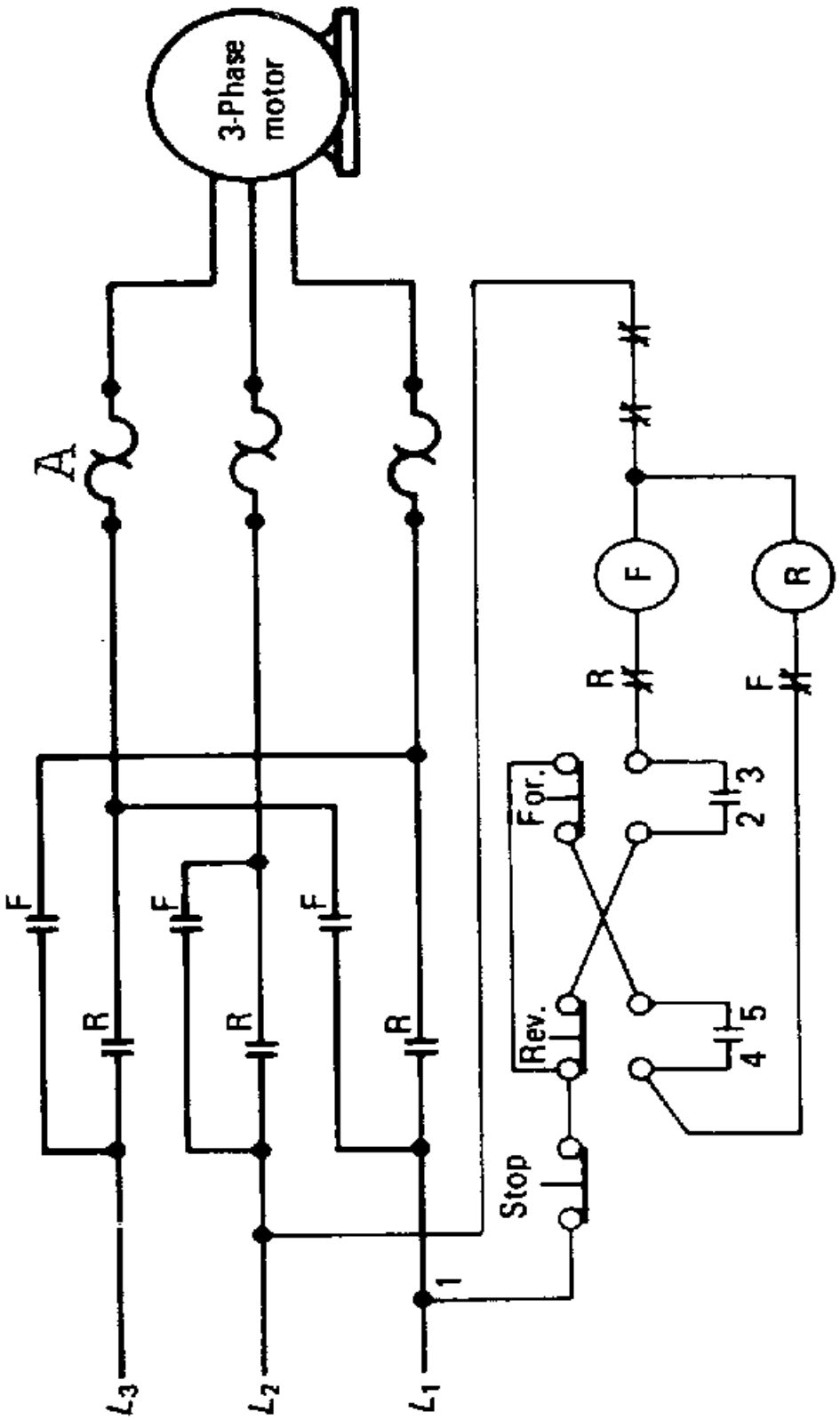

EL 0012

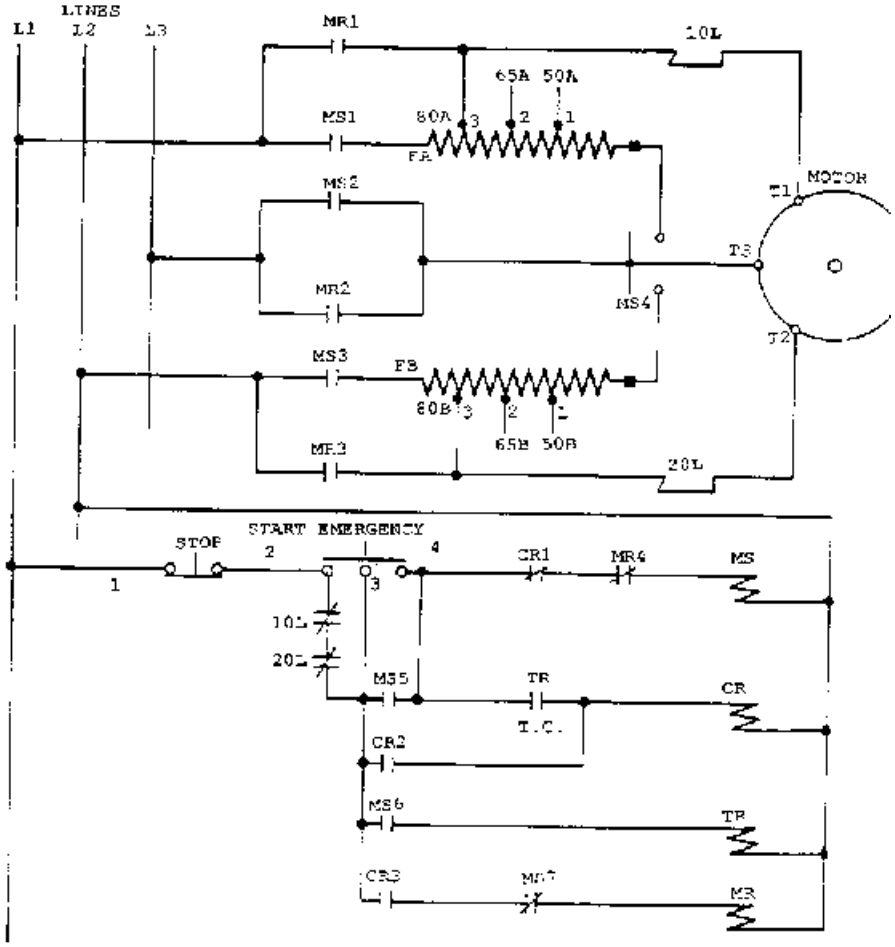
LINES
L1
L2
L3
MR1
10L
65A
50A
MS1
60A
3
2
1
FA
MS2
MOTOR
T1
T3
MR2
MS4
T2
MS3
FB
60B
3
2
1
65B
50B
MR3
20L
START
EMERGENCY
STOP
2
4
1
3
CR1
MR4
MS
10L
20L
MS5
TR
CR
T.C.
CR2
MS6
TR
CR3
MR7
MR

EL-0012

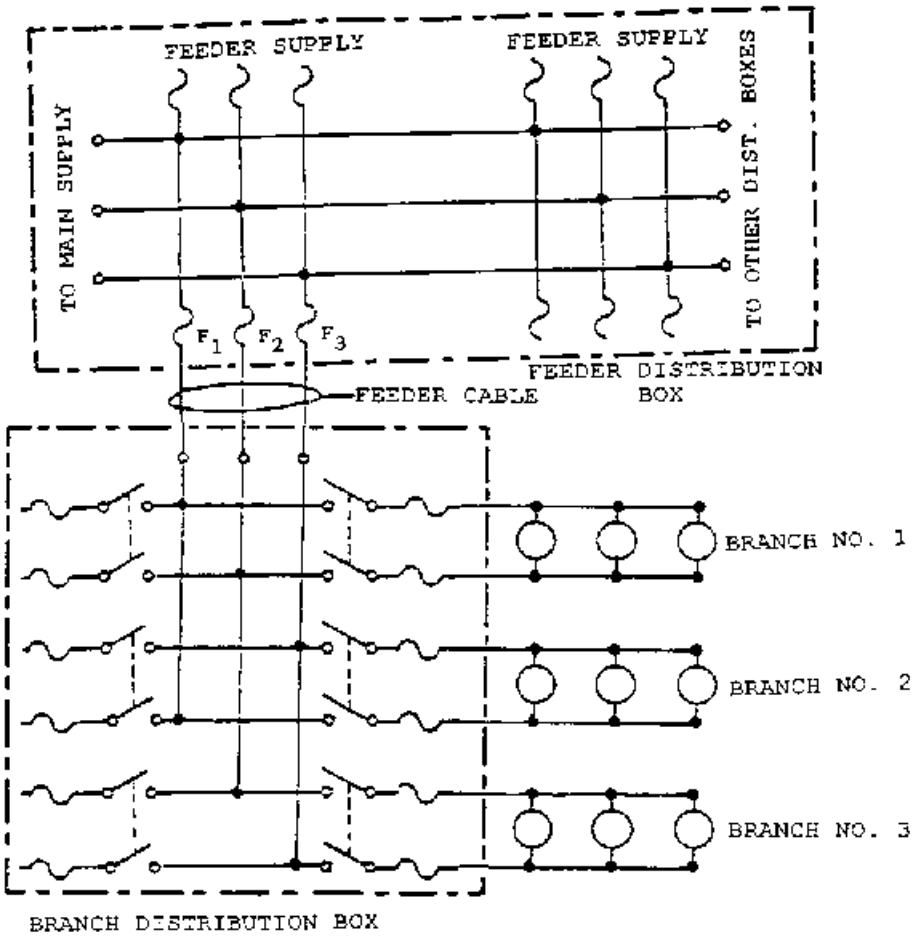
FEEDER SUPPLY
FEEDER SUPPLY
TO MAIN SUPPLY
TO OTHER DIST. BOXES
F_1
F_2
F_3
FEEDER DISTRIBUTION BOX
FEEDER CABLE
BRANCH NO. 1
BRANCH NO. 2
BRANCH NO. 3
BRANCH DISTRIBUTION BOX

El-0013

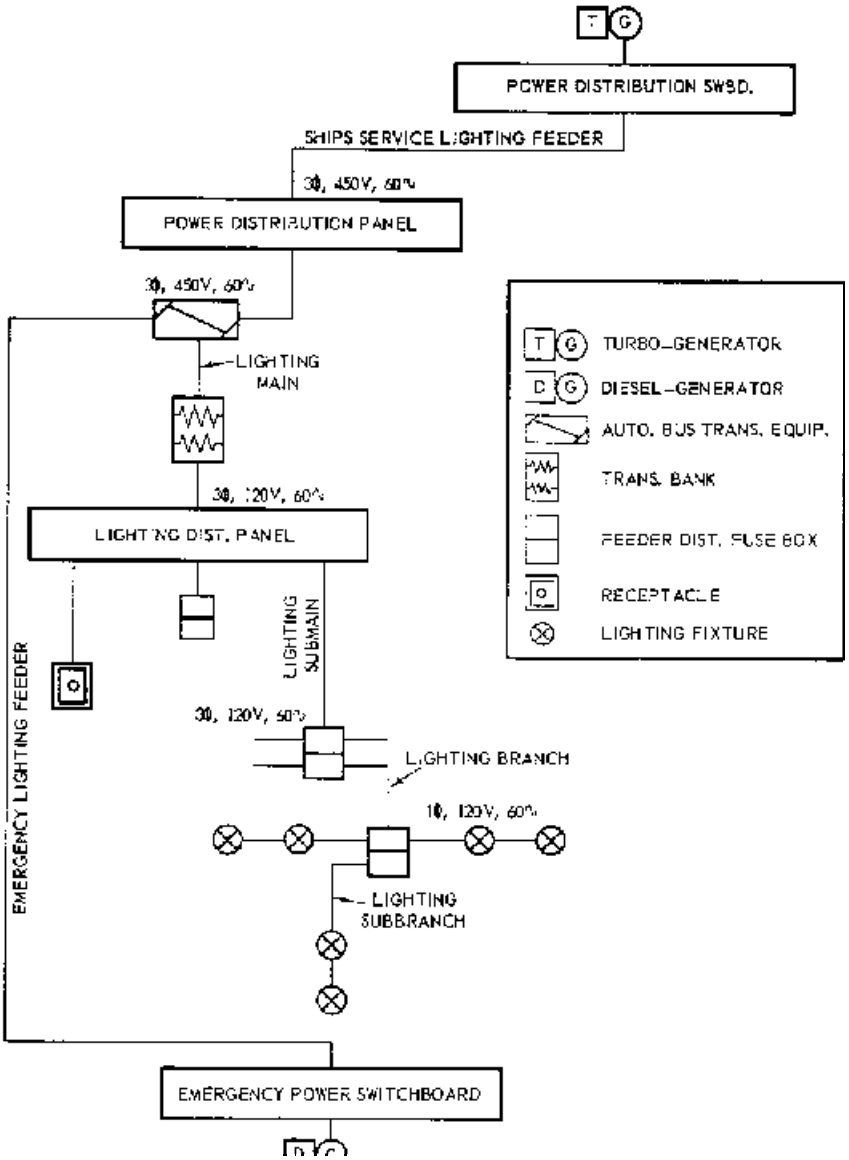
T G
POWER DISTRIBUTION SWBD.
SHIPS SERVICE LIGHTING FEEDER
3Φ, 450V, 60~
POWER DISTRIBUTION PANEL
3Φ, 450V, 60~
LIGHTING MAIN
3Φ, 120V, 60~
LIGHTING DIST. PANEL
LIGHTING SUBMAIN
EMERGENCY LIGHTING FEEDER
3Φ, 120V, 60~
LIGHTING BRANCH
1Φ, 120V, 60~
LIGHTING SUBBRANCH
EMERGENCY POWER SWITCHBOARD
TURBO-GENERATOR
DIESEL-GENERATOR
AUTO. BUS TRANS. EQUIP.
TRANS. BANK
FEEDER DIST. FUSE BOX
RECEPTACLE
LIGHTING FIXTURE

El-0014

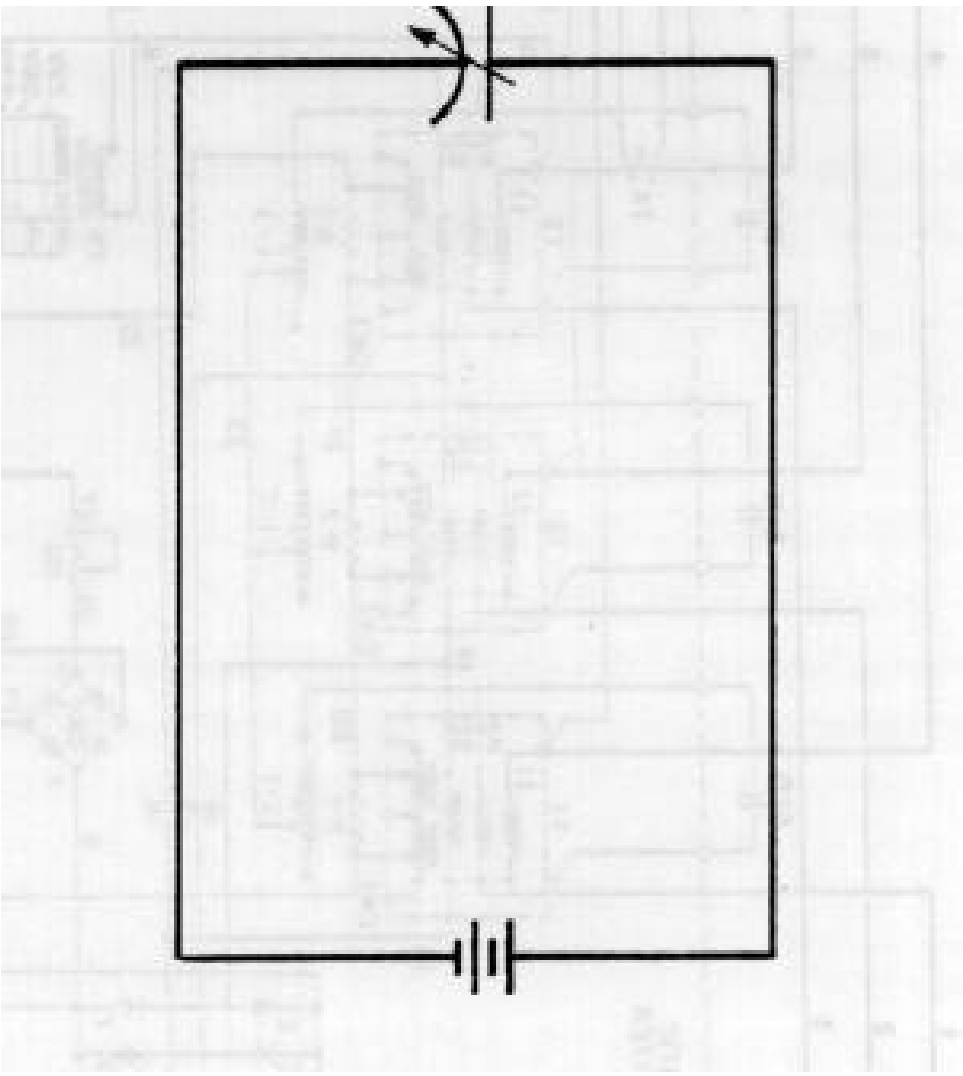

El-0015

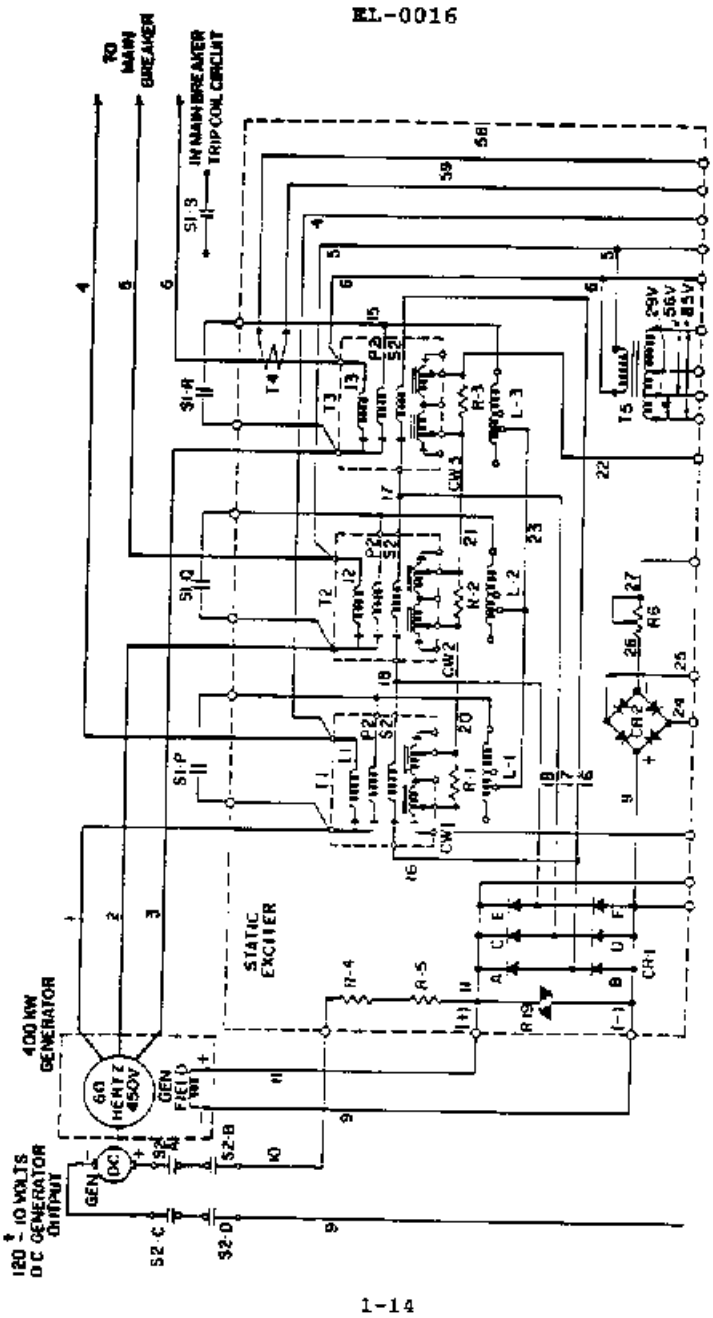
EL-0016
TO MAIN BREAKER
IN MAIN BREAKER TRIP COIL CIRCUIT
400 KW GENERATOR
60 HERTZ 450V
GEN FIELD
STATIC EXCITER
120 ± 10 VOLTS DC GENERATOR OUTPUT
GEN
(DC)
S1-S
S1-R
S1-Q
S1-P
S2-A
S2-B
S2-C
S2-D
T1
T2
T3
T4
T5
R-1
R-2
R-3
R-4
R-5
R6
R9
L-1
L-2
L-3
CW1
CW2
CW3
CR1
CR2
29V
56V
85V
1-14

El-0016

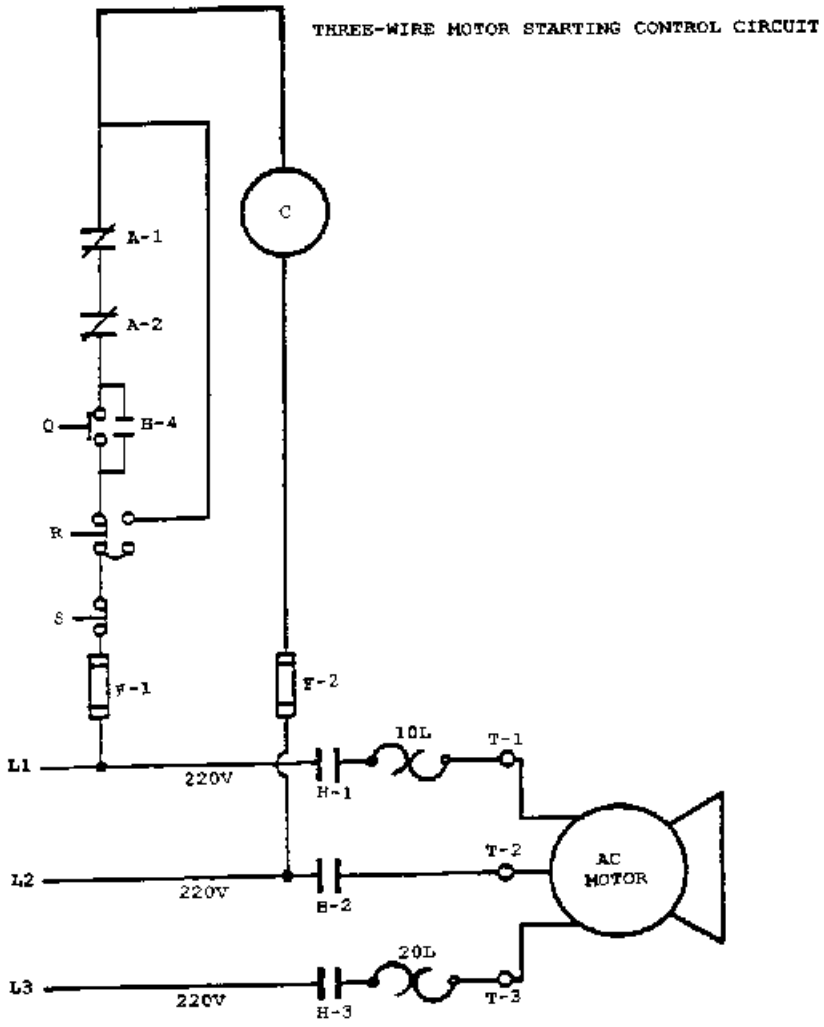
THREE-WIRE MOTOR STARTING CONTROL CIRCUIT
C
A-1
A-2
Q
B-4
R
S
F-1
F-2
L1
220V
H-1
10L
T-1
L2
220V
H-2
T-2
AC
MOTOR
L3
220V
H-3
20L
T-3

El-0017

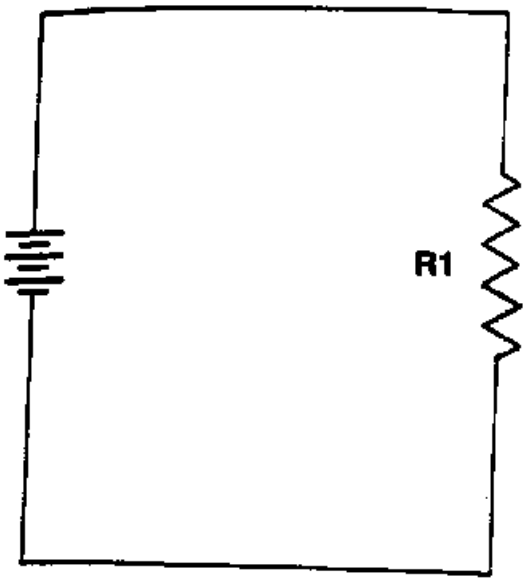

El-0018

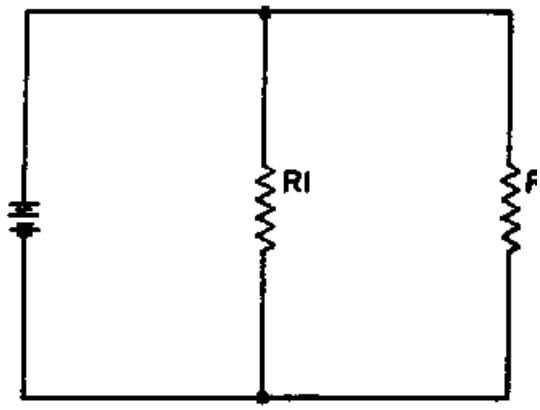

EL-0019

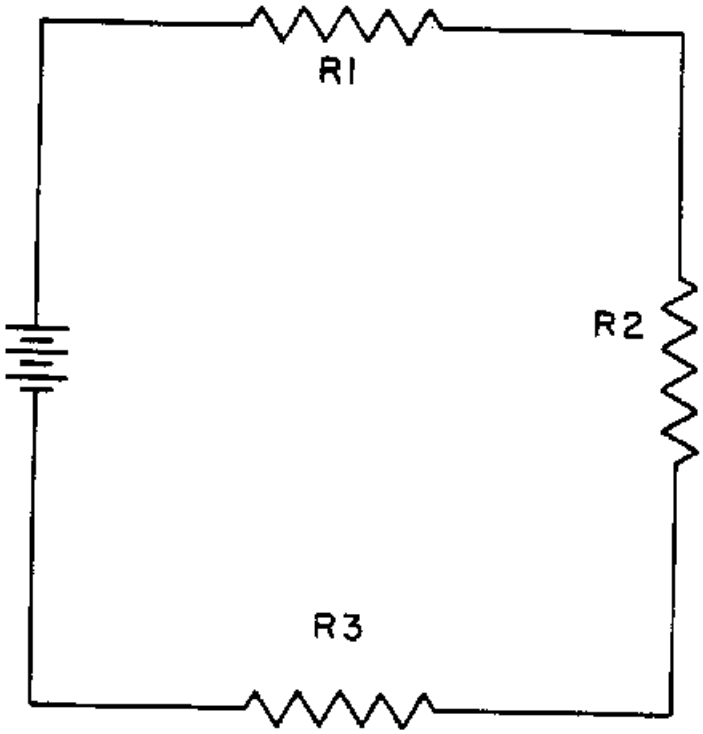

1-16

EL-0020