REVISIONS				
MARK	CODE	DESCRIPTION	DATE	APPROVED
	A	U-JOINT MOUNTING TURNED 90°	DAE 2-21-91	
	B	PER : DRAWING PER ORIGINAL REV C	DAE 2-25-91	
	C	ADDED PIN, PE 21, (WASHER, COTTER, ETC) 1 %	DAE 7-25-91	

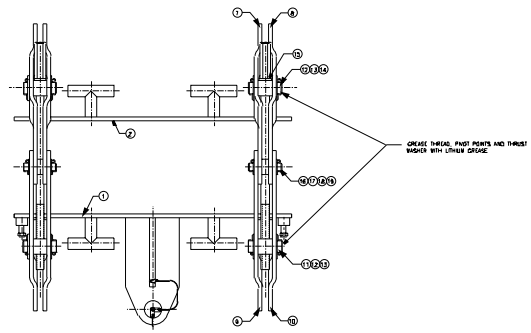

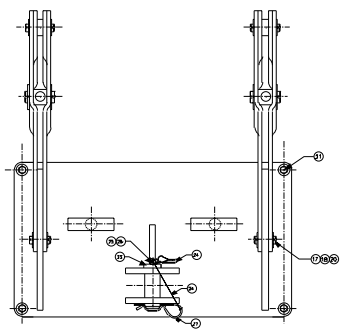

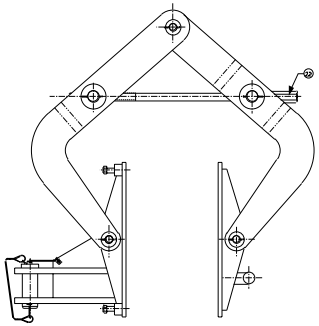

ITEM	DESCRIPTION	QTY	MATERIAL	SPEC/DWG NO	USCG DWG NO
1	JAW - OUTRIGGER SUPPORT	1	ALUM	4-28444	171 651
2	JAW - BACK UP	1	ALUM	3-28433	171 572
7	ARM - INNER	2	ALUM	3-28435-2	171 574-2
8	ARM - INNER	2	ALUM	3-28435-1	171 574-1
9	ARM - OUTER	2	ALUM	3-28436-1	171 575-1
10	ARM - OUTER	2	ALUM	3-28436-2	171 575-2
11	TRUNNION - THREADED	2	STNLS STL	2-28347	171 576
12	1 1/2 PLAIN WASHER	8	STNLS STL	COML	-
13	3/16 X 2.00 LG COTTER PIN	8	STNLS STL	COML	-
14	TRUNNION - PLAIN	2	STNLS STL	2-28348	171 577
15	WASHER - THRUST	2	BRC BRONZE	2-28438	171 578
16	PIN - SPECIAL	2	STNLS STL	2-28439	171 579
17	1" PLAIN WASHER	12	STNLS STL	COML	-
18	3/16 X 1.50 LG COTTER PIN	12	STNLS STL	COML	-
19	SPACER	2	ALUM	2-28430	171 580
20	PIN - SPECIAL	4	STNLS STL	2-28451	171 581
21	BETWEEN - SPECIAL	4	STNLS STL	2-28349	171 582
22	SCREW - CLAMPING	2	STNLS STL	2-28348	171 582
23	PIN - U-JOINT	1	STNLS STL	3-28446	171 652
24	LANYARD - 18"	2	MARLSTER-CARR P/N 9031712A3		
25	1/4 -20 UNC X .00 HEX HD CSCW	1	STNLS STL	COML	-
26	1/4 SPLIT LOCKWASHER	1	STNLS STL	COML	-
27	CLIP - U-JOINT PIN	1	STNLS STL	2-28174	171 653

NUM	REVISION	-	ADDED PE 20, PE 24 - ETC DWG :	BAC
REV	BAC	APPR	DESCRIPTION	BY

CONTRACT NUMBER DTCG23-91-C-EC1087

TOLERANCES UNLESS OTHERWISE SPECIFIED:
X ±12" .XXX ±005"
XX ±015" .XXXX ±0003"
ANGLES ±2°
RADII .03"
FINISH 125 RMS

DICHROMA, INCORPORATED
ALEXANDRIA, VIRGINIA
(703) 921-1440

CONSULTANTS

U. S. COAST GUARD
CIVIL ENGINEERING
WASHINGTON, DC

USCG. COMDT G-SEC-2
2100 2ND STREET SW
WASHINGTON, DC 20693-0001

ISSUE		
01	08/01/91	LV
MARK	DATE	DESCRIPTION

A/E PROJECT NO: 236
CAD FILE NAME: 2171630001
DESIGNED BY: DAE
DRAWN BY: DAE
EDITED BY: LV
CHECKED BY: LWB

SCALE: 1/4"=1'-0" PLOT SCALE:

SHEET TITLE
CLAMP/OUTRIGGER/FLOAT
G-SEC-2C
WASHINGTON DC

CLAMP ASSEMBLY

REVIEWED BY: JM	REVIEWED BY:	REVIEWED BY:
PROJECT ENGR.	BRANCH CHIEF	G-SEC-2
CHIEF, CIVIL ENG		DATE 11/01/91

PROJECT NUMBER	DRAWING NUMBER
98-	171 630
DISCIPLINE/SHT NO	SHEET 1 OF 1