PC NO	DESCRIPTION	QTY	MATERIAL	SPEC.	DWG/IDENT.NO.
1	PLATE – .75 THICK	1	ALUMINUM	6061–T6	SEE DETAIL
2	PLATE – .75 THICK	1	ALUMINUM	6061–T6	SEE DETAIL
3	PLATE – .50 THICK	1	ALUMINUM	6061–T6	SEE DETAIL

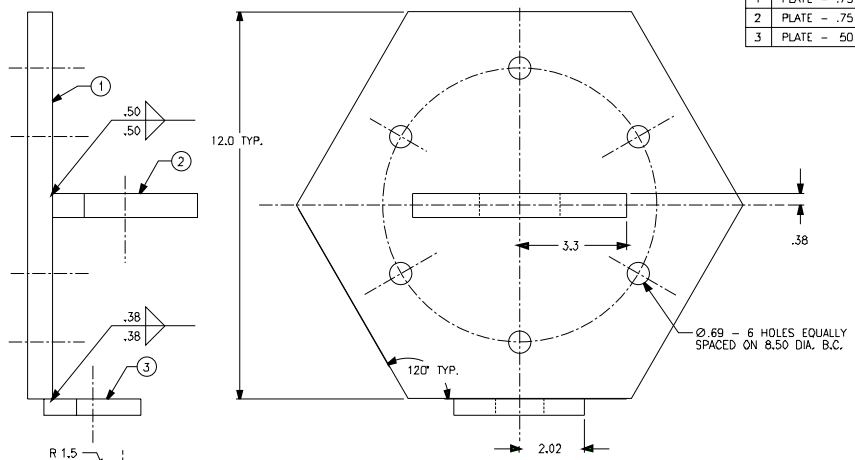

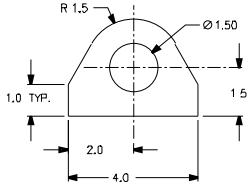

DETAIL – PC 3

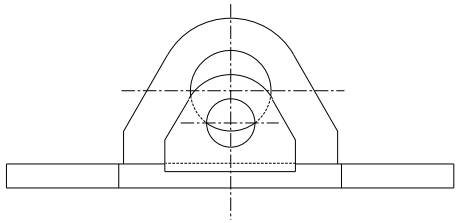

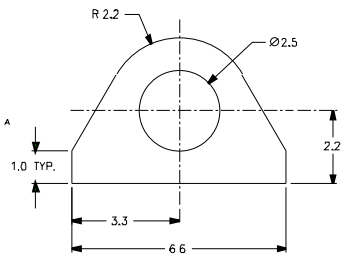

DETAIL – PC 2

REMOVE ALL BURRS AND SHARP EDGES

ALL WELDS SHALL:

1. BE PERFORMED BY WELDER(S) AND USING PROCEDURES CERTIFICATED AS QUALIFIED PER MIL–STD–248 AND MIL–STD–1689A, SECTION 4.
2. MEET THE WELDING REQUIREMENTS OF MIL–STD–1689A, SECTION 13.
3. ADHERE TO THE WORKMANSHIP REQUIREMENTS OF MIL–STD–1689A, SECTION 14.

CONTRACT NUMBER DTCG23-91-C-EC1067

TOLERANCES UNLESS OTHERWISE SPECIFIED:
.X ±12° .XXX ±.005"
.XX ±016" .XXXX ±.0005"
ANGLES .5°
RADII .03"
FINISH 125 RMS

DICHROMA, INCORPORATED
ALEXANDRIA, VIRGINIA
(703) 921-1440

CONSULTANTS

U. S. COAST GUARD
CIVIL ENGINEERING
WASHINGTON, DC

USCG COMDT G-SEC-2
2100 2ND STREET SW
WASHINGTON, DC 20593-0001

ISSUE		
01	06/01/01	LV
MARK	DATE	DESCRIPTION

A/E PROJECT NO: 236
CAD FILE NAME: 2171B35001
DESIGNED BY: DAE
DRAWN BY: DAE
EDITED BY: LV
CHECKED BY: LNB

SCALE: 1/2 PLOT SCALE:

SHEET TITLE
CLAMP/OUTRIGGER/FLOAT
G-SEC-2C
WASHINGTON DC

ADAPTER–ATTACHMT–WELDMT

REVIEWED BY:	REVIEWED BY:	REVIEWED BY:
JM		
PROJECT ENG.	BRANCH CHIEF	G-SEC-2
	CHIEF, CIVIL ENG	06/05/92 DATE

PROJECT NUMBER	DRAWING NUMBER
98–	171 625
DISCIPLINE/SHT NO	SHEET 1 OF 1