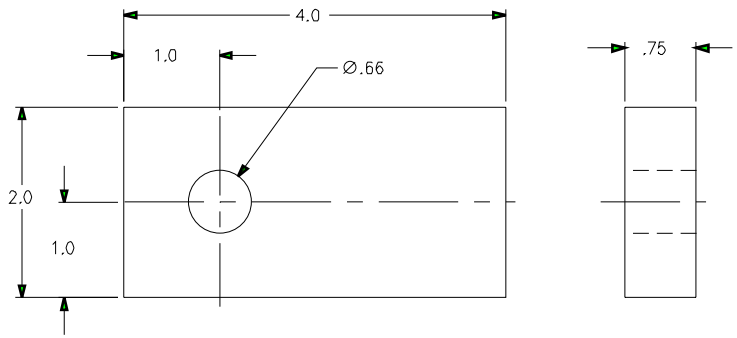

3. TOLERANCE – .X = +/–.06
2. REMOVE ALL BURRS AND SHARP EDGES
1. MATERIAL – STEEL – ASTM A36

CONTRACT NUMBER DTCG23-91-C-EC1067

TOLERANCES UNLESS OTHERWISE SPECIFIED:
X ±12" XXX ±005"
XX ±015" XXXX ±0005"
ANGLES .5°
RADII .03"
FINISH 125 RMS

DICHROMA, INCORPORATED
ALEXANDRIA, VIRGINIA
(703) 921-1440

CONSULTANTS

U. S. COAST GUARD
CIVIL ENGINEERING
WASHINGTON, DC

USCG COMDT G-SEC-2
2100 2ND STREET SW
WASHINGTON, DC 20593-0001

MARK	DATE	DESCRIPTION
D1	08/01/01	LV

A/E PROJECT NO: 236
CAD FILE NAME: 2171615D01
DESIGNED BY: DAE
DRAWN BY: DAE
EDITED BY: LV
CHECKED BY: LWB

SCALE: FULL PLOT SCALE:

SHEET TITLE

BASE PLATE
G-SEC-2C
WASHINGTON DC

CLAMP

REVIEWED BY: JM	REVIEWED BY:	REVIEWED BY:
PROJECT ENG.	BRANCH CHIEF	G-SEC-2
CHIEF, CIVIL ENG		09/16/92 DATE

PROJECT NUMBER 98- DRAWING NUMBER 171 615

DISCIPLINE/SHT NO

SHEET 1 OF 1