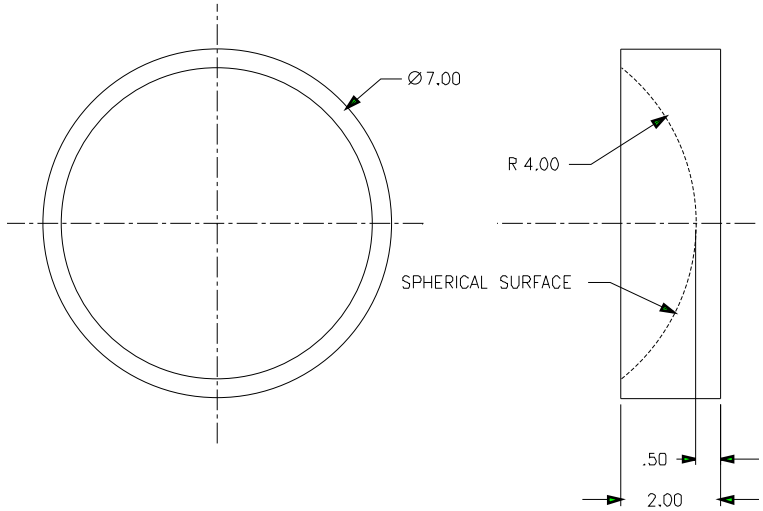


2. REMOVE ALL BURRS AND SHARP EDGES
1. MATERIAL – ALUMINUM – 6061–T651

| REV | DATE | APPR. | DESCRIPTION | BY |
|---|---|---|---|---|
| A | 10/25/00 | - | USCG DWG. NO. 046-171 SH1 | DH |

CONTRACT NUMBER DTCG23-91-C-EC1067

TOLERANCES UNLESS OTHERWISE SPECIFIED:
.X ±12" .XXX ±005"
.XX ±015" XXXX ±0005"
ANGLES .5°
RADII .03"
FINISH 125 RMS

DICHROMA, INCORPORATED
ALEXANDRIA, VIRGINIA
(703) 921-1440

CONSULTANTS

U. S. COAST GUARD
CIVIL ENGINEERING
WASHINGTON, DC

USCG COMDT G-SEC-2
2100 2ND STREET SW
WASHINGTON, DC 20593-0001

ISSUE

| MARK | DATE | DESCRIPTION |
|---|---|---|
| 01 | 06/01/01 | LV |

A/E PROJECT NO: 236
CAD FILE NAME: Z171612001
DESIGNED BY: DAE
DRAWN BY: DAE
EDITED BY: LV
CHECKED BY: LWB

SCALE: 1/2"=1'-0" PLOT SCALE:

SHEET TITLE

DAVIT
G-SEC-2C
WASHINGTON DC

SOCKET

| REVIEWED BY: | REVIEWED BY: | REVIEWED BY: |
|---|---|---|
| JM | | |
| PROJECT ENG | BRANCH CHIEF | G-SEC-2 |

CHIEF, CIVIL ENG — DATE 03/18/92

| PROJECT NUMBER | DRAWING NUMBER |
|---|---|
| 98– | 171 612 |

DISCIPLINE/SHT NO

SHEET 1 OF 1