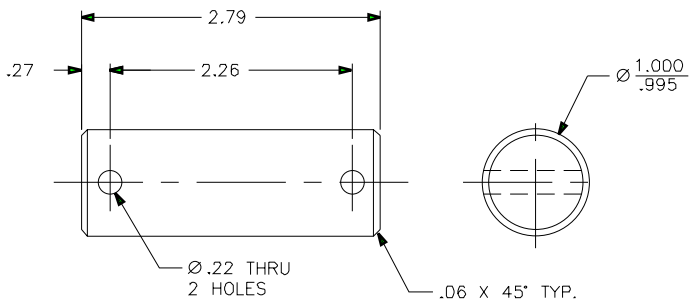

2. REMOVE ALL BURRS AND SHARP EDGES

1. MATERIAL – STAINLESS STEEL
   PER ASTM A581, TYPE 303

CONTRACT NUMBER DTCG23-91-C-EC1067

TOLERANCES UNLESS OTHERWISE SPECIFIED:
X ±12" XXX ±005"
.XX ±015" .XXXX ±0005"
ANGLES .5°
RADII .03"
FINISH 125 RMS

DICHROMA, INCORPORATED
ALEXANDRIA, VIRGINIA
(703) 921-1440

CONSULTANTS

U. S. COAST GUARD
CIVIL ENGINEERING
WASHINGTON, DC

USCG, CGMDT G-SEC-2
2100 2ND STREET SW
WASHINGTON, DC 20593-0001

ISSUE		
01	06/01/01	LV
MARK	DATE	DESCRIPTION

A/E PROJECT NO. 236
CAD FILE NAME: Z171581001
DESIGNED BY DAE
DRAWN BY: DAE
EDITED BY: LV
CHECKED BY: LWB

SCALE FULL PLOT SCALE:

SHEET TITLE
CLAMP – DAVIT SUPPORT/OUTRIGGER
G-SEC-2C
WASHINGTON DC

PIN – SPECIAL

REVIEWED BY: JM	REVIEWED BY:	REVIEWED BY:
PROJECT ENG.	BRANCH CHIEF	G-SEC-2

CHIEF, CIVIL ENG — DATE 10/22/91

PROJECT NUMBER	DRAWING NUMBER
98-	171 581

DISCIPLINE/SHT NO

SHEET 1 OF 1