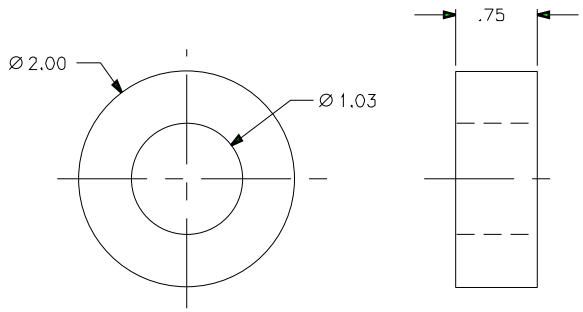

2. REMOVE ALL BURRS AND SHARP EDGES
1. MATERIAL – ALUMINUM – 6061–T6

CONTRACT NUMBER DTCG23-91-C-EC1067

TOLERANCES UNLESS OTHERWISE SPECIFIED:
.X ±12" .XXX ±005"
.XX ±015" .XXXX ±0005"
ANGLES .5°
RADII .03"
FINISH 125 RMS

DICHROMA, INCORPORATED
ALEXANDRIA, VIRGINIA
(703) 921-1440

CONSULTANTS

U. S. COAST GUARD
CIVIL ENGINEERING
WASHINGTON, DC

USCG COMDT G-SEC-2
2100 2ND STREET SW
WASHINGTON, DC 20593-0001

ISSUE		
01	08/01/01	LV
MARK	DATE	DESCRIPTION

A/E PROJECT NO 236
CAD FILE NAME: 217158D001
DESIGNED BY: DAE
DRAWN BY DAE
EDITED BY: LV
CHECKED BY: LWB

SCALE: FULL PLOT SCALE:

SHEET TITLE
CLAMP – DAVIT SUPPORT/OUTRIGGER
G-SEC-2C
WASHINGTON DC

SPACER

REVIEWED BY:	REVIEWED BY	REVIEWED BY:
JM		
PROJECT ENG.	BRANCH CHIEF	G-SEC-2

CHIEF, CIVIL ENG — DATE 10/22/91

PROJECT NUMBER	DRAWING NUMBER
98–	171 580
DISCIPLINE/SHT NO	SHEET 1 OF 1