REVISIONS				
ZONE	LTR	DESCRIPTION	DATE	APPROVED
	A	REMOVED CLEAT, PC 8, ADDED PC 7 & 8 REVISED DIM'S, ADDED TOLERANCE NOTE FOR .X DAE	2/28/92	
	B	.38 WELD FILLET WAS .50 - 3 PLACES DAE	5-8-92	
	C	ELIMINATED PLUG WELDS - PC 1 TO PC 1 DAE	7-21-92	

PC NO	DESCRIPTION	QTY	MATERIAL	SPEC.	DWG/IDENT.NO.
1	PLATE - 20.00 X 36.00 X .50 THK	1	ALUMINUM	6061-T651	-
2	PLATE - .75 THICK	2	ALUMINUM	6061-T651	SEE DETAIL
3	PLATE - .50 THICK	2	ALUMINUM	6061-T651	SEE DETAIL
4	PLATE - .50 THICK	1	ALUMINUM	6061-T651	SEE DETAIL
5	ROUND - 1.50 DIA. X 1.00 LG	4	ALUMINUM	6061-T651	-
6	SELF LKG INSERT - 5/8 -11 UNC	4	STNLS STL	McMASTER # 90247A017	
7	ROUND - 1.50 DIA. X 2.75 LONG	2	ALUMINUM	6061-T651	-
8	ROUND - 1.50 DIA X 6.00 LONG	2	ALUMINUM	6061-T651	

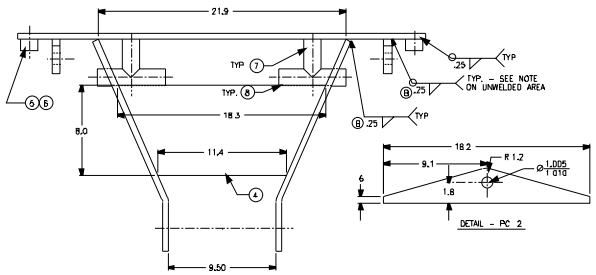

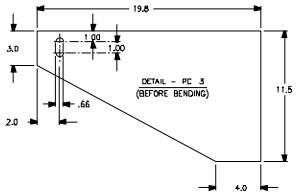

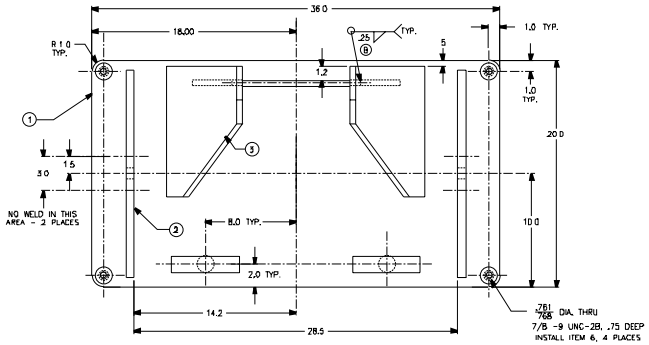

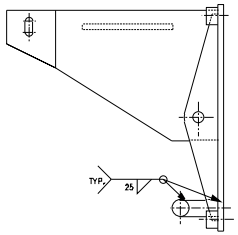

ALL WELDS SHALL:

1. BE PERFORMED BY WELDER(S) AND USING PROCEDURES CERTIFICATED AS QUALIFIED PER MIL-STD-248 AND MIL-STD-1689A, SECTION 4.
2. MEET THE WELDING REQUIREMENTS OF MIL-STD-1689A, SECTION 13.
3. ADHERE TO THE WORKMANSHIP REQUIREMENTS OF MIL-STD-1689A, SECTION 14

REV	DATE	APPR	DESCRIPTION	BY
A/B	1/17/92		.25 WELD FILLET WAS .38 - 3 PLACES	DAE

CONTRACT NUMBER DTCG23-91-C-EC1067

TOLERANCES UNLESS OTHERWISE SPECIFIED:
.X ±12" .XXX ±005"
.XX ±015" .XXXX ±0005"
ANGLES .5°
RADII .03"
FINISH 125 RMS

DICHROMA, INCORPORATED
ALEXANDRIA, VIRGINIA
(703) 821-1440

CONSULTANTS

U. S. COAST GUARD
CIVIL ENGINEERING
WASHINGTON, DC

USCG, COMDT G-SEC-2
2100 2ND STREET SW
WASHINGTON, DC 20593-0001

ISSUE		
01	06/01/01	LV
MARK	DATE	DESCRIPTION

A/E PROJECT NO 236
CAD FILE NAME: 2171571D01
DESIGNED BY: DAE
DRAWN BY: DAE
EDITED BY: LV
CHECKED BY: LWB

SCALE: 1/4"=1'-0" PLOT SCALE:

SHEET TITLE
CLAMP - DAVIT SUPPORT
G-SEC-2C
WASHINGTON DC

JAW-INBD-DAVIT SUP-WLDT

REVIEWED BY	REVIEWED BY	REVIEWED BY:
JM		
PROJECT ENG.	BRANCH CHIEF	G-SEC-2

CHIEF, CIVIL ENG — DATE 10/15/91

PROJECT NUMBER	DRAWING NUMBER
98-	171 571

DISCIPLINE/SHT NO

SHEET 1 OF 1