REVISIONS				
REV	LTR	DESCRIPTION	DATE	APPROVED
	A	REVISED SHEET 1 FOR CLAMP SCREW	04-18-97	

ITEM	DESCRIPTION	QTY	MATERIAL	DWG/SPEC	USCG DWG NO
1	JAW - DAVIT SUPPORT	1	ALUM	4-28422	171 571
2	JAW - BACK UP	1	ALUM	3-28423	171 572
3	COLLAR	1	ALUM	4-28424	171 573
4	BUSHING	1	REXNORD DURALON # 701-01086-128		
5	5/8 - 11 UNC X 1.25 HEX HD CSCW	2	STNLS STL	316	-
6	5/8 PLAIN WASHER	2	STNLS STL	COM'L	-
7	ARM - INNER	2	ALUM	3-28425-2	171 574-2
8	ARM - INNER	2	ALUM	3-28425-1	171 574-1
9	ARM - OUTER	2	ALUM	3-28426-1	171 575-1
10	ARM - OUTER	2	ALUM	3-28426-2	171 575-2
11	SILICON BRONZE W/ 1" X 8" ACME THREADS	2	STNLS STL	2-28347	171 576
12	1 1/2 PLAIN WASHER	8	STNLS STL	COM'L	-
13	3/16 X 2.00 LG COTTER PIN	8	STNLS STL	COM'L	-
14	TRUNNION - PLAIN	2	STNLS STL	2-28346	171 577
15	WASHER - THRUST	2	BRZ BRONZE	2-28428	171 578
16	PIN - SPECIAL	2	STNLS STL	2-28429	171 579
17	1" PLAIN WASHER	12	STNLS STL	COM'L	-
18	5/16 X 1.50 LG COTTER PIN	12	STNLS STL	COM'L	-
19	SPACER	2	ALUM	2-28430	171 580
20	PIN - SPECIAL	4	STNLS STL	2-28431	171 581
21	SETSCREW - SPECIAL	4	STNLS STL	2-28348	171 582
22	1" X 8" ACME THREADS	2	STNLS STL	3-28346	171 583

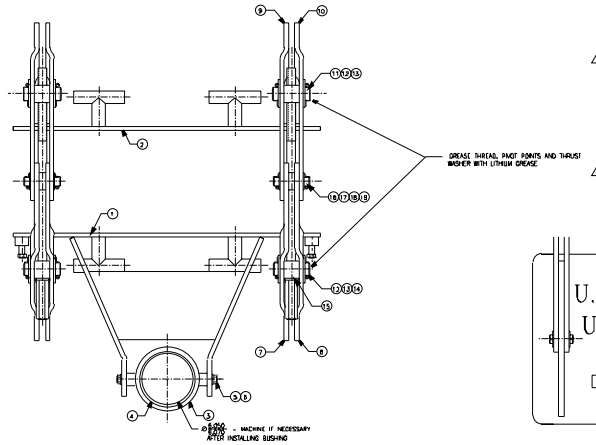

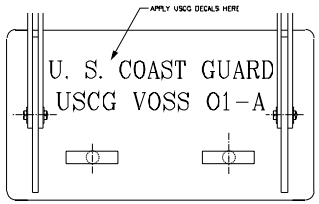

VIEW A-A

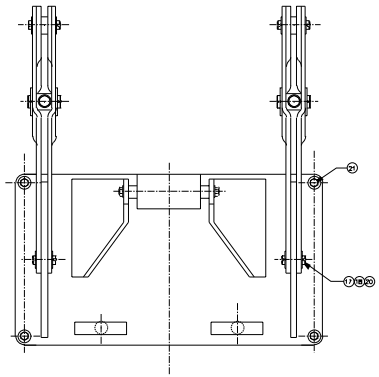

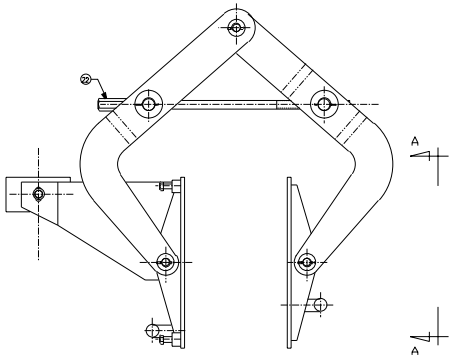

REV	DATE	APPR.	DESCRIPTION	BY
B	03/14/93	-	WERE/DESIG-A-WERE-ALL-DE PART 2 TRUNION CHANGED TO BLOCK BRONZE W/ 1"x8" ACME THREADS, PART 22 CLAMP SCREW CHANGED TO 1"x8" ACME THREADS	-
A/C	10/03/92	-	ADDED VIEW A-A, REDUCED SPW, SUBSTANCING	DAE

CONTRACT NUMBER DTCG23-91-C-EC1067

TOLERANCES UNLESS OTHERWISE SPECIFIED:
X ±12" .XXX ±.005"
XX ±.015" .XXXX ±.0005"
ANGLES .5°
RADII .03"
FINISH 125 RMS

DICHROMA, INCORPORATED
ALEXANDRIA, VIRGINIA
(703) 821-1440

CONSULTANTS

U. S. COAST GUARD
CIVIL ENGINEERING
WASHINGTON, DC

USCG. COMDT G-SEC-2
2100 2ND STREET SW
WASHINGTON, DC 20593-0001

ISSUE		
01	08/01/01	LV
MARK	DATE	DESCRIPTION

A/E PROJECT NO. 236
CAD FILE NAME: 2171570001
DESIGNED BY DAE
DRAWN BY: DAE
EDITED BY: LV
CHECKED BY. LWB

SCALE: 1/4"=1'-0" PLOT SCALE:

SHEET TITLE

G-SEC-2C
WASHINGTON DC

CLAMP ASSY - DAVIT SUPRT

REVIEWED BY: JM	REVIEWED BY.	REVIEWED BY.
PROJECT ENG	BRANCH CHIEF	G-SEC-2
CHIEF, CIVIL ENG		10/22/91 DATE

PROJECT NUMBER	DRAWING NUMBER
98-	171 570
DISCIPLINE/SHT NO	SHEET 1 OF 1