PC NO	DESCRIPTION	QTY	MATERIAL	SPEC.	
1	4 WAY PNEUMATIC VALVE	1	VERSA P/N VBL-4403-167		
2	REDUCING STREET ELBOW	1	BRENNAN P/N 5502-6-8		
3	EDUCTOR, STAINLESS STEEL	1	STAINLESS STEEL PART NO. 612007 △9		
4	MALE ELBOW	1	PARKER P/N 6 CBTX-S		
5	MALE ELBOW	1	PARKER P/N 6-6 CBTX-S		
6	MALE RUN TEE	1	PARKER P/N 6-6-6 RBTX-S		
7	MALE CONNECTOR	1	PARKER P/N 6-6 FBTX-S		
8	PLUG	1	PARKER P/N 3/8 HP-S		
9	3/8 OD X .049 WALL SMLS TBG	15"	STNLS STL	ASTM A269	–

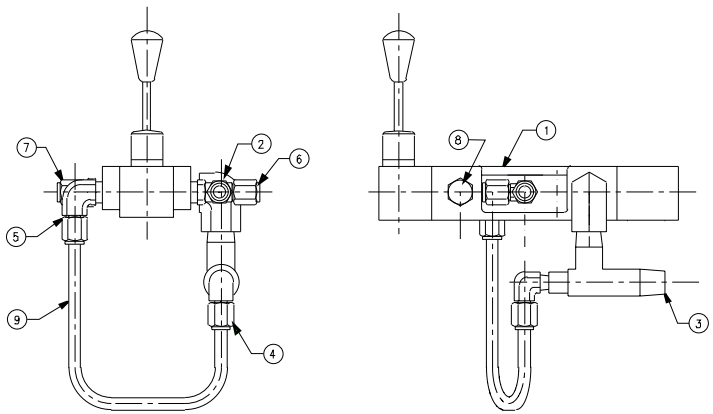

REV.	DATE	APPR.	DESCRIPTION	BY
B	11/14/96	–	PC 2 CHANGED TO 3/4X1(OD, BOX). NEPALI 98-B-4-0(B)-(A)-18 GRADER STEEL (GALVANIZE REPLACED W/ S.S. PER NO. 612007	–
A	10/23/92	–	PORTING CHANGED, USER ONLY, NO. VVS 111 108	SPC

CONTRACT NUMBER DTCG23-91-C-EC1067

TOLERANCES UNLESS OTHERWISE SPECIFIED:
.X ±12° .XXX ±.005"
.XX ±016" .XXXX ±.0005"
ANGLES ±5°
RADII .03"
FINISH 125 RMS

DICHROMA, INCORPORATED
ALEXANDRIA, VIRGINIA
(703) 921-1440

CONSULTANTS

U. S. COAST GUARD
CIVIL ENGINEERING
WASHINGTON, DC

USCG COMDT G-SEC-2
2100 2ND STREET SW
WASHINGTON, DC 20593-0001

ISSUE

MARK	DATE	DESCRIPTION
01	06/01/01	LV

A/E PROJECT NO: 236
CAD FILE NAME: 2171556001
DESIGNED BY: DAE
DRAWN BY: DAE
EDITED BY: LV
CHECKED BY: LNB

SCALE: 1/2"=1'-0" PLOT SCALE:

SHEET TITLE

CONTROL STAND
G-SEC-2C
WASHINGTON DC

AIR VALVE SUBASSEMBLY

REVIEWED BY: JM	REVIEWED BY:	REVIEWED BY:
PROJECT ENG.	BRANCH CHIEF	G-SEC-2
CHIEF, CIVIL ENG		04/13/92 DATE

PROJECT NUMBER	DRAWING NUMBER
98–	171 556
DISCIPLINE/SHT NO	SHEET 1 OF 1