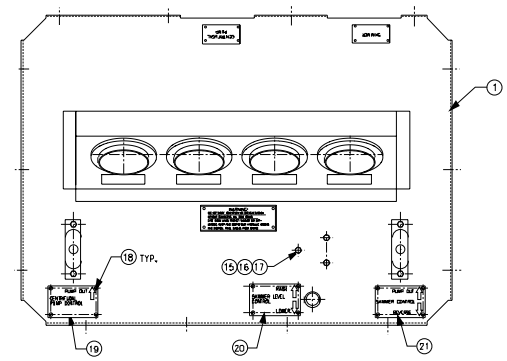

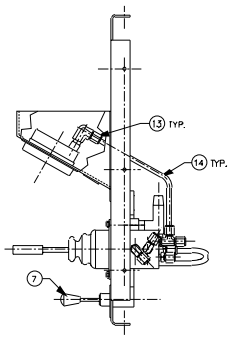

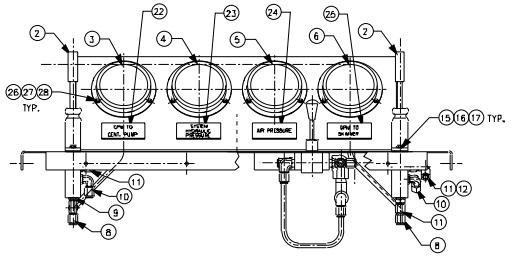

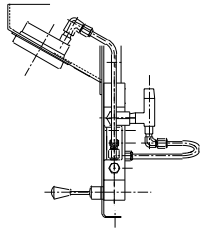

PC NO	DESCRIPTION	QTY	MATERIAL	DWG/SPEC	USCG DWG NO.
1	COVER WELDMENT	1	ALUMINUM	4-28780	171 555
2	PILOT CONTROL UNIT	2	REXROTH P/N 1 X 2TH6P7B-10/MD5		
3	0-50 GPM SPECIAL PRESS GAUGE	1	TRERICE P/N 893/50GPM		
4	3510095WL 02BXFT 0-5000 PSI GAUGE	1	ASHCROFT P/N 3610D95WL02BXFF-4000PSI		
5	0-200 PSI GAUGE	1	ASHCROFT P/N 3510D9AW02BXFF-200 PSI		
6	0-25 GPM SPECIAL PRESS. GAUGE	1	TRERICE P/N 893/25GPM		
7	AIR VALVE SUBASSEMBLY	1	VARIOUS	3-28676	171 556
8	STR THD RUN TEE	2	PARKER P/N 6 RSBX-S		
9	STR THD PLUG	1	PARKER P/N 6 P50N-S		
10	STR THD ELBOW	2	PARKER P/N 6 CSBX-S		
11	STR THD CONNECTOR	3	PARKER P/N 6 FSBX-S		
12	SWIVEL NUT ELBOW	1	PARKER P/N 6 C6X-S		
13	FEMALE ELBOW	4	PARKER P/N 6 DBTX-S		
14	3/8 " O.D. X .049 WALL SMLS 18G	48"	STNLS STL	ASTM A-269	-
15	1/4 -20 UNC X .75 HEX HD C'SCW	7	STNLS STL	COM'L	-
16	1/4 -20 UNC HEX NUT	7	STNLS STL	COM'L	-
17	1/4 SPLIT LOCKWASHER	7	STNLS STL	COM'L	-
18	#6-32X.50 SELF TPG PAN HD SCW	28	STNLS STL	COM'L	-
19	CENT. PUMP TAG	1	GRAVOPLY II	4-28458-9	171 558-9
20	SKIMMER LEVEL CONTROL TAG	1	GRAVOPLY II	4-28458-8	171 558-8
21	SKIMMER CONTROL TAG	1	GRAVOPLY II	4-28458-7	171 558-7
22	GPM TO CENT. PUMP TAG	1	GRAVOPLY II	4-28458-1	171 558-1
23	SYSTEM HYDRAULIC PRESSURE TAG	1	GRAVOPLY II	4-28458-4	171 558-4
24	AIR PRESSURE TAG	1	GRAVOPLY II	4-28458-3	171 558-3
25	GPM TO SKIMMER TAG	1	GRAVOPLY II	4-28458-2	171 558-2
26	#10-24 X .75 PAN HEAD SCREW	12	STNLS STL	COM'L	-
27	#10 SPLIT LOCKWASHER	12	STNLS STL	COM'L	-
28	#10-24 HEX NUT	12	STNLS STL	COM'L	-
29	SKIMMER TAG	1	GRAVOPLY II	4-28458-6	171 558-6
30	CENTRIFUGAL PUMP TAG	1	GRAVOPLY II	4-28458-5	171 558-5
31	CASE DRAIN WARNING TAG	1	GRAVOPLY II	4-28458-18	171 558-18

REV.	DATE	APPR	DESCRIPTION	BY
D	09/08/93	-	METALF 0840-B-1066-ALL-56 REPLACED B-1060 PAD BASE WITH B-1060WL, 0840WT, B-1060PB CAGE. METALF 1060-B-1060-ALL-18, FLOW CAGES REPLACED WITH LOUVER-FILLED CASING.	-
C	04/16/92	-	ADDED PC NO. 26, 27, & 28. PC NO 19 QTY WAS 28	DAE
B	04/09/92	-	PC NO. 2 WAS REVISED P/N 1-2TH6P3D-10/MD5.	DAE
A	10/15/92	-	UPGRADED AIR VALVE ASSY., CHECK VAL WAS 171 552 (REV. A WAS 171 548), TEE 1 WAS 171 546, FCOR 96-33 WAS 171 550	DAE

CONTRACT NUMBER DTCG23-91-C-EC1067

TOLERANCES UNLESS OTHERWISE SPECIFIED:
.X ±10" .XXX ±005"
.XX ±015" .XXXX ±0005"
ANGLES .5°
RADII .03"
FINISH 125 RMS

DICHROMA, INCORPORATED
ALEXANDRIA, VIRGINIA
(703) 921-1440

CONSULTANTS

U. S. COAST GUARD
CIVIL ENGINEERING
WASHINGTON, DC

USCG, COMDT G-SEC-2
2100 2ND STREET SW
WASHINGTON, DC 20593-0001

MARK	DATE	DESCRIPTION
01	06/01/01	LV

A/E PROJECT NO: 236
CAD FILE NAME: Z171554001
DESIGNED BY: DAE
DRAWN BY: DAE
EDITED BY: LV
CHECKED BY: LWB

SCALE: 1/4"=1'-0" PLOT SCALE:

SHEET TITLE

CONTROL STAND
G-SEC-2C
WASHINGTON DC

COVER SUBASSEMBLY

REVIEWED BY: JM | REVIEWED BY: | REVIEWED BY:
PROJECT ENG. | BRANCH CHIEF | G-SEC-2
CHIEF, CIVIL ENG | 07/14/92 DATE

PROJECT NUMBER 98- | DRAWING NUMBER 171 554
DISCIPLINE/SHT NO | SHEET 1 OF 1