ITEM NO	DESCRIPTION	QTY	MATERIAL	DWG/SPEC.	USCG DWG. NO.
1	ENCLOSURE SUB-ASSEMBLY	1	VARIOUS	4-28792	171 551
2	COVER SUB ASSEMBLY	1	VARIOUS	4-28793	171 552
3	GUARD WELDMENT	1	ALUMINUM	3-28781	171 553
4	3/8 " O.D. X .049 WALL SMLS TBG	20'	STNLS STL	ASTM A-269	-
5	UNION TEE	1	PARKER P/N 6 JBTX-S		
6	1/4 -20 UNC X 1.50 HEX HD C'SCW	8	STNLS STL	COM'L	-
7	1/4 -20 UNC HEX NUT	8	STNLS STL	COM'L	-
8	#10-24 X .50 SELF TPG HEX HD C'SCW	14	STNLS STL	COM'L	-
9	1/2 NPT COUPLING	1	PVC	COM'L	-
10	1/2 NPT SCH 40 PIPE-20" LONG	1	PVC	COM'L	THD ONE END

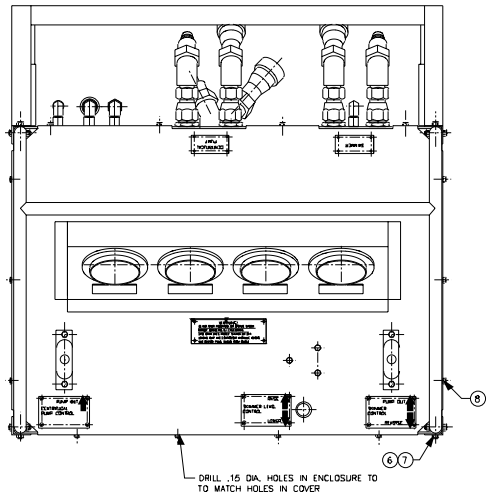

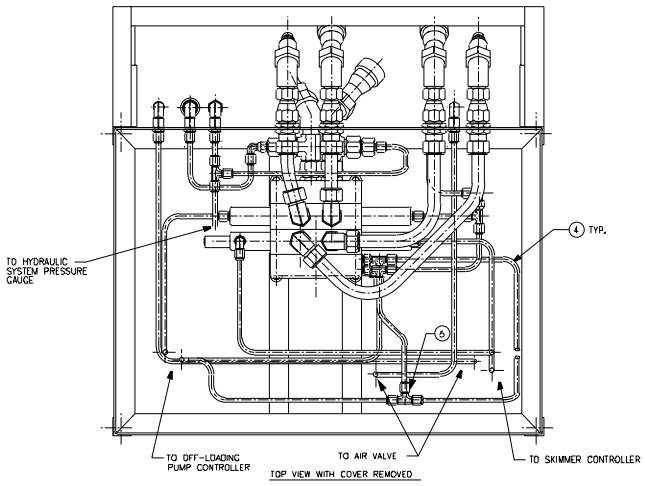

TOP VIEW WITH COVER REMOVED

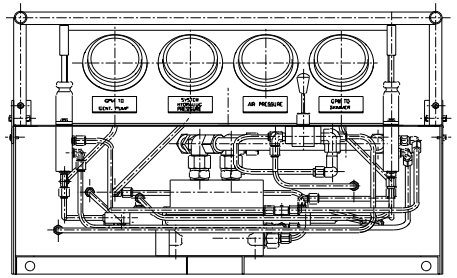

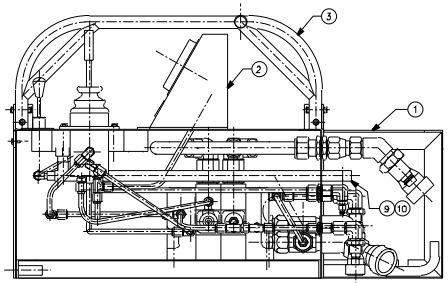

REV.	DATE	APPR	DESCRIPTION	BY
A	04/20/92	-	UPDATED TABS	DAE

CONTRACT NUMBER DTCG23-91-C-EC1067

TOLERANCES UNLESS OTHERWISE SPECIFIED:
.X ±10" .XXX ±005"
.XX ±015" .XXXX ±0005"
ANGLES .5°
RADII .03"
FINISH 125 RMS

DICHROMA, INCORPORATED
ALEXANDRIA, VIRGINIA
(703) 921-1440

CONSULTANTS

U. S. COAST GUARD
CIVIL ENGINEERING
WASHINGTON, DC

USCG, COMDT G-SEC-2
2100 2ND STREET SW
WASHINGTON, DC 20593-0001

ISSUE

MARK	DATE	DESCRIPTION
01	06/01/01	LV

A/E PROJECT NO: 236
CAD FILE NAME: Z171550001
DESIGNED BY: DAE
DRAWN BY: DAE
EDITED BY: LV
CHECKED BY: LWB

SCALE: 1/4"=1'-0" PLOT SCALE:

SHEET TITLE

G-SEC-2C
WASHINGTON DC

CONTROL STAND ASSEMBLY

REVIEWED BY: JM | REVIEWED BY: | REVIEWED BY:

PROJECT ENG. | BRANCH CHIEF G-SEC-2

CHIEF, CIVIL ENG | 07/22/92 DATE

PROJECT NUMBER 98- | DRAWING NUMBER 171 550

DISCIPLINE/SHT NO

SHEET 1 OF 1