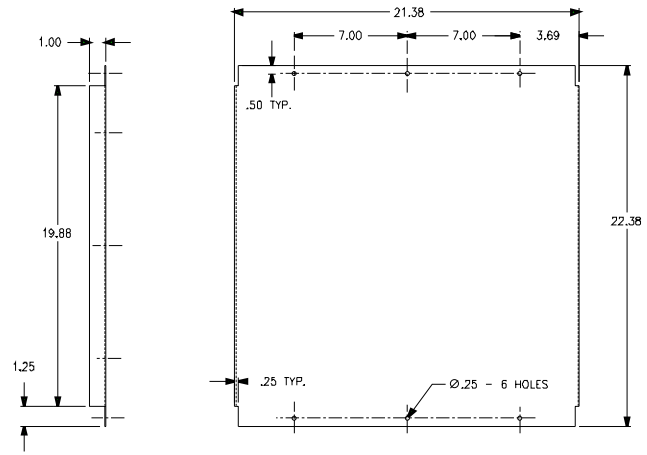

2. REMOVE ALL BURRS AND SHARP EDGES
1. MATERIAL – ALUMINUM SHEET – .080 THICK PER 5052-H32

REV	DATE	APPR.	DESCRIPTION	BY
A	10/25/92	-	USCG CIVIL ENG. AIR AND 171 397	DAE

CONTRACT NUMBER D1CG23-91-C-EC1067

TOLERANCES UNLESS OTHERWISE SPECIFIED:
X ±10" .XXX ±.005"
XX ±.015" .XXXX ±.0005"
ANGLES .5°
RADII .03"
FINISH 125 RMS

DICHROMA, INCORPORATED
ALEXANDRIA, VIRGINIA
(703) 921-1440

CONSULTANTS

U. S. COAST GUARD
CIVIL ENGINEERING
WASHINGTON, DC

USCG. COMDT G-SEC-2
2100 2ND STREET SW
WASHINGTON, DC 20593-0001

ISSUE

MARK	DATE	DESCRIPTION
01	06/01/01	LV

A/E PROJECT NO: 236
CAD FILE NAME: 2171542001
DESIGNED BY: DAE
DRAWN BY: DAE
EDITED BY: LV
CHECKED BY: LWB

SCALE 1/4"=1'-0" PLOT SCALE:

SHEET TITLE

AIR COMPRESSOR
G-SEC-2C
WASHINGTON DC

COVER

REVIEWED BY:	REVIEWED BY:	REVIEWED BY:
JM		
PROJECT ENG.	BRANCH CHIEF	G-SEC-2
CHIEF, CIVIL ENG		07/01/92 DATE

PROJECT NUMBER	DRAWING NUMBER
98-	171 542
DISCIPLINE/SHT NO	SHEET 1 OF 1