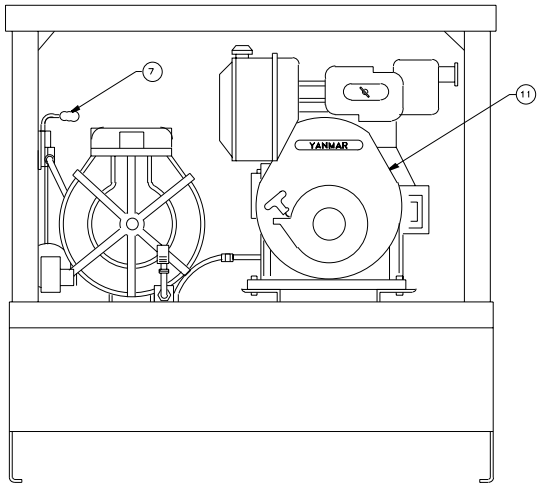

FRONT VIEW

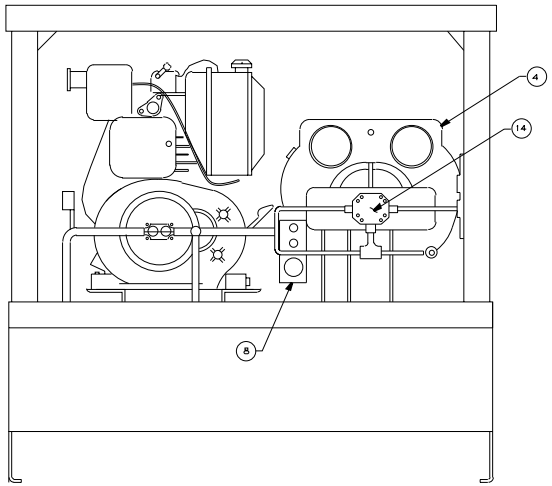

REAR VIEW

① POWER PACK ASSEMBLY

PRECIOUS METAL INDICATOR CODE						
WEIGHTS						
STRESS						
MATERIALS & PROCESSES						
QUALITY ASSURANCE						
MANUFACTURING ENGRS		PART DASH NO.	NEXT	FINAL	NEXT ASSY	USED ON
ADDITIONAL APPROVALS	DATE		NEXT ASSY		APPLICATION	

CONTRACT NUMBER DTCG23-92-C-EC1069

UNLESS OTHERWISE SPECIFIED.
ALL DIMENSIONS ARE IN INCHES
TOLERANCES: FRACTIONS ±1/32 DECIMALS ±.01 ±.005 ANGLES ±1°

DICHROMA, INCORPORATED
ALEXANDRIA, VIRGINIA
(703) 921-1440

CONSULTANTS

U. S. COAST GUARD
CIVIL ENGINEERING
WASHINGTON, DC

USCG, COMDT G-SEC-2
2100 2ND STREET SW
WASHINGTON, DC 20593-0001

ISSUE

MARK	DATE	DESCRIPTION
01	07/17/01	LV

A/E PROJECT NO: 254
CAD FILE NAME: Z1723411D02
DESIGNED BY:
DRAWN BY: JGD
EDITED BY:
CHECKED BY:

SCALE 1/4" = 1'-0" PLOT SCALE

SHEET TITLE

G-SEC-2C
WASHINGTON DC

POWER PACK ASSEMBLY

REVIEWED BY:	REVIEWED BY	REVIEWED BY:
PROJECT ENG.	BRANCH CHIEF	G-ECV-3D
CHIEF, CIVIL ENG		DATE

PROJECT NUMBER	DRAWING NUMBER
	1723411
DISCIPLINE/SHT NO	
98-	SHEET 2 OF 2