NOTES:

1. INTERPRET DRAWING PER MIL-STD-100E.
2. UNLESS OTHERWISE SPECIFIED:
   A. BREAK ALL SHARP EDGES: .005-.015R.
   B. GRIND ALL FLAME OR SAW CUT EDGES SMOOTH.
   C. MACHINE SURFACE FINISH 125
   D. ALL MACHINE WORK SHALL BE ACCOMPLISHED AFTER WELDING
3. MATERIALS: ALL MATERIALS SHALL BE OF NEW MANUFACTURE. STRUCTURAL STEEL SHALL COMPLY WITH THE PROVISIONS OF ASTM A36. STRUCTURAL TUBING SHALL BE ERW, 0.25 WALL PER ASTM A500, GR. B. MILL TEST CERTIFICATES REQUIRED FOR ALL MATERIALS INCLUDING WELDING FILLER METAL.
4. WELDING: SMAW PROCESS PER AWS D14.1, USING E7018 LOW-HYDROGEN ELECTRODES PER AWS A5.5 AND MIL-E-22200/1. REMOVE ALL FLUX AND SPLATTER. ALL JOINTS SHALL BE WIRE BRUSHED, CLEAN OF ALL SLAG, DE-GREASED AND DYE PENETRANT INSPECTED PER AWS D14.1.
5. FINISH PER OSI-SPEC-1000A.

6 -2 SUPPORT ASSEMBLY BOLT HOLE CONFIGURATION.

7 APPLICABLE TO -1 ASSY. ONLY. DO NOT DUPLICATE ON -2 ASSY.

8 SEE DETAIL-B FOR -2 BOLT HOLE CONFIGURATION.

PARTS LIST

QTY REQD -2	QTY REQD -1	CAGE CODE	SYM	PART OR IDENTIFYING NO	NOMENCLATURE OR DESCRIPTION	MATERIAL SPECIFICATION	ZONE	ITEM NO.
				-1	SUPPORT ASSY., REDUCTION GEAR			1
				-2	SUPPORT ASSY., BEARING			2
1	1			-3	BASE, RECT. STRL. TBG. 2"x4"x1/4"x24"L.	ASTM A500		3
1	1			-4	WEB PL. .50 NOM. THK. 16"x16"	ASTM A36		4
1	1			-5	FLANGE, FB 1/4" NOM. x 4"W.	ASTM A36		5
2	2			-6	GUSSET, PL. 1/4"NOM.	ASTM A36		6
2	2			-6	PLATE, CLOSURE PL. .25 NOM. 1 1/2"x3 1/2"	ASTM A36		7

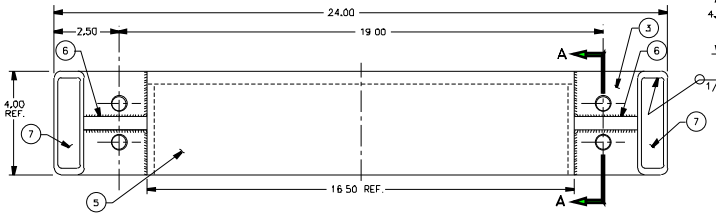

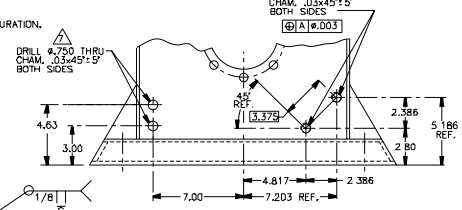

DETAIL-B
SCALE: 3"=1"

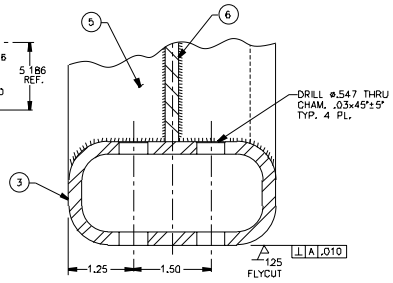

SECTION A-A
SCALE: FULL

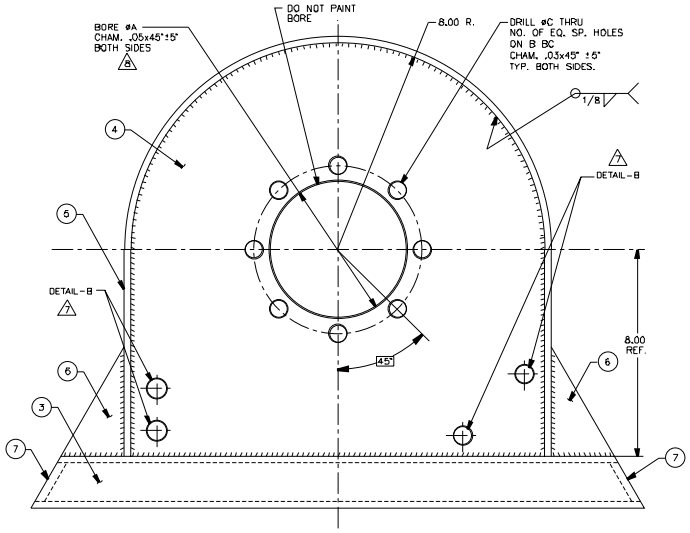

1 SUPPORT ASSEMBLY

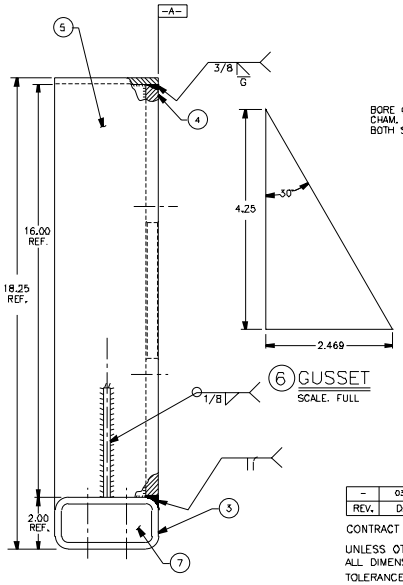

6 GUSSET
SCALE. FULL

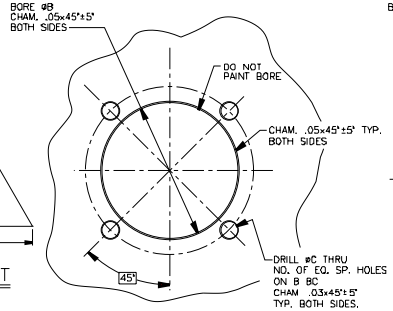

DETAIL-B 8
SCALE HALF

REV.	DATE	APPR.	DESCRIPTION	BY
-	03/93	-	-	-

CONTRACT NUMBER DTCG23-92-C-EC1069

UNLESS OTHERWISE SPECIFIED:
ALL DIMENSIONS ARE IN INCHES.
TOLERANCES: FRACTIONS ±1/32 DECIMALS ±.01 ±.005 ANGLES ±1°

DICHROMA, INCORPORATED
ALEXANDRIA, VIRGINIA
(703) 921-1440

CONSULTANTS

U. S. COAST GUARD
CIVIL ENGINEERING
WASHINGTON, DC

USCG. COMDT G-SEC-2
2100 2ND STREET SW
WASHINGTON, DC 20593-0001

MARK	DATE	DESCRIPTION
01	07/17/01	LV

A/E PROJECT NO: 254
CAD FILE NAME: 2172313001
DESIGNED BY: RWS
DRAWN BY: JD
EDITED BY:
CHECKED BY: RWS
SCALE 1/4" = 1'-0" PLOT SCALE:

SHEET TITLE
G-SEC-2C
WASHINGTON DC

SUPPORT ASSEMBLY

REVIEWED BY: REVIEWED BY: REVIEWED BY
PROJECT ENG. BRANCH CHIEF G-ECV-3D
CHIEF, CIVIL ENG DATE

PROJECT NUMBER DRAWING NUMBER
172313
DISCIPLINE/SHT NO 98-
SHEET 1 OF 1