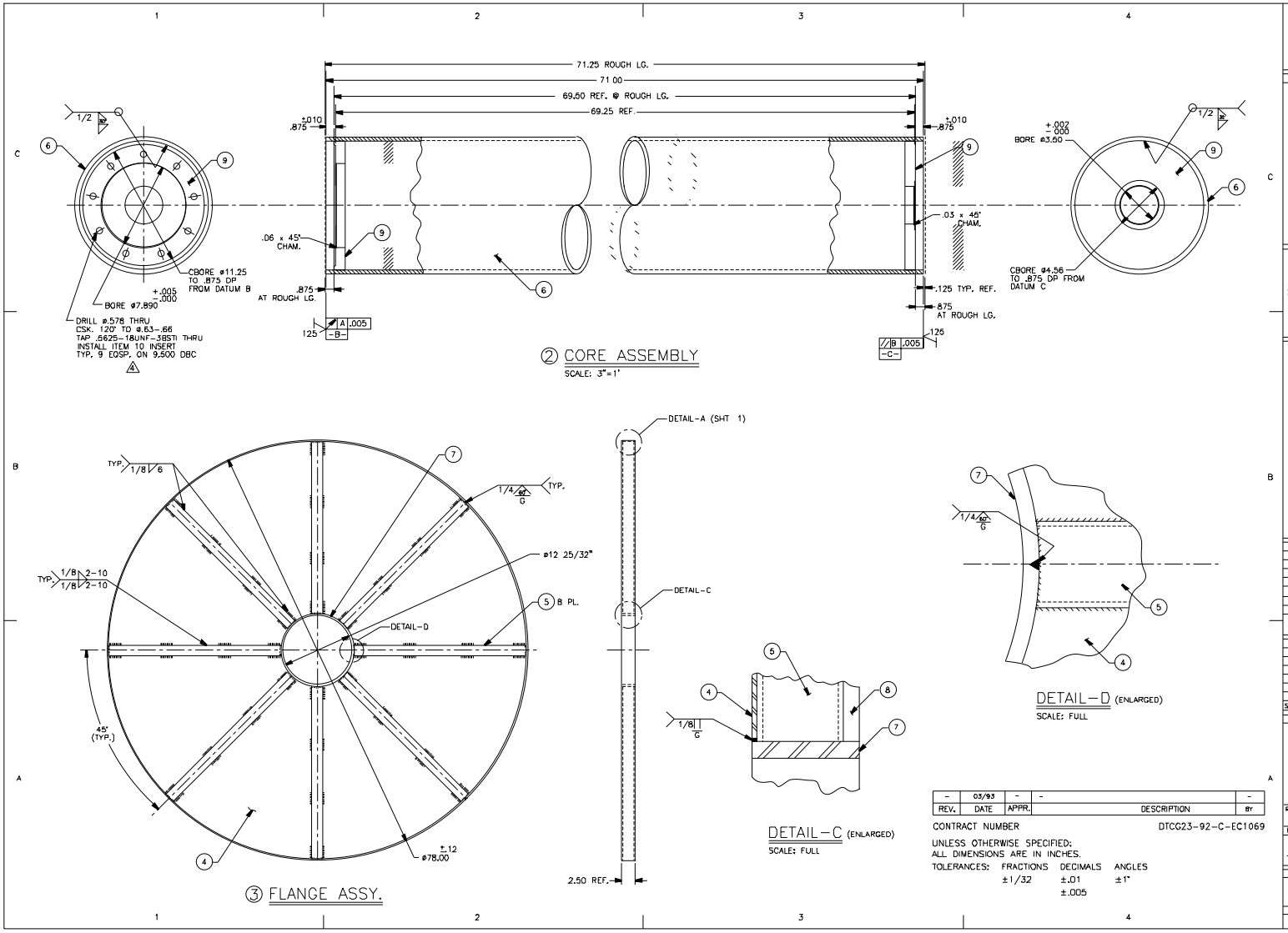

REV.	DATE	APPR.	DESCRIPTION	BY
-	03/93	-	-	-

CONTRACT NUMBER DTCG23-92-C-EC1069

UNLESS OTHERWISE SPECIFIED:
ALL DIMENSIONS ARE IN INCHES.

TOLERANCES:	FRACTIONS	DECIMALS	ANGLES
	±1/32	±.01	±1°
		±.005	

DICHROMA, INCORPORATED
ALEXANDRIA, VIRGINIA
(703) 921-1440

CONSULTANTS

U. S. COAST GUARD
CIVIL ENGINEERING
WASHINGTON, DC

USCG. COMDT G-SEC-2
2100 2ND STREET SW
WASHINGTON, DC 20593-0001

MARK	DATE	DESCRIPTION
01	07/17/01	LV

A/E PROJECT NO: 254
CAD FILE NAME: 2172312002
DESIGNED BY: RWS
DRAWN BY: JD
EDITED BY:
CHECKED BY: RWS

SCALE 1-1/2"=1'-0" PLOT SCALE:

SHEET TITLE

G-SEC-2C
WASHINGTON DC

REEL ASSEMBLY

REVIEWED BY: | REVIEWED BY: | REVIEWED BY

PROJECT ENG. | BRANCH CHIEF | G-ECV-3D

CHIEF, CIVIL ENG | DATE

PROJECT NUMBER | DRAWING NUMBER
172312

DISCIPLINE/SHT NO
98-

SHEET 2 OF 2