NOTES:

1. INTERPRET DRAWING PER MIL-STD-100E.
2. UNLESS OTHERWISE SPECIFIED:
   A. BREAK ALL SHARP EDGES: .005-.015R.
   B GRIND ALL FLAME OR SAW CUT EDGES SMOOTH.
   C MACHINE SURFACE FINISH 125
3. MATERIALS: ALL MATERIALS SHALL BE OF NEW MANUFACTURE. PIPE SHALL BE 12.00 NOM, STD. WT, SEAMLESS PER MIL-P-25995 MILL TEST CERTIFICATES REQUIRED FOR ALL MATERIALS INCLUDING WELDING FILLER METAL.
4. REMOVE ALL CHIPS BEFORE INSTALLING INSERTS. INSTALL .75-1.50 PITCH BELOW SURFACE BREAK OFF TANGS
5. WELDING: INERT GAS SHIELDED TUNGSTEN ARC PROCESS IN ACCORDANCE WITH MIL-W-22248A, CLASS 3, USING ER4043 FILLER METAL PER MIL-E-16053, TYPE 4043. SUBSEQUENT HEAT TREATMENT REQUIREMENTS NOT APPLICABLE.
6. CLEAN AND DEGREASE, MASK BOLTING SURFACES AND FINISH PER THE PROVISIONS OF OSI-SPEC-1000A. DO NOT PAINT INSIDE SURFACES OF FLANGES OR DRUM
7. MAY BE HALVED.
8. INERT GAS METAL ARC WELDING MAY BE USED IN LIEU OF TUNGSTEN ARC PROCESS BY PRIOR WRITTEN PERMISSION ONLY FROM DESIGN ACTIVITY
9. PROTECT SHAFT SURFACES FROM WELDING SPLATTER DURING FABRICATION AND ASSEMBLY PROCESSES
10. FINISH SPEC. NOT APPLICABLE FOR CONTRACT DTCG23-92-C-EC1069

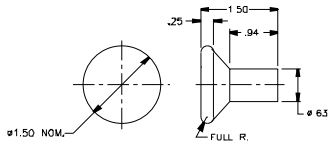

(11) BUTTON
SCALE. FULL

PARTS LIST

QTY REQD	CAGE CODE	SYM	PART OR IDENTIFYING NO	NOMENCLATURE OR DESCRIPTION	MATERIAL SPECIFICATION	ZONE	ITEM NO
			-1	REEL ASSY.			1
1			-2	CORE ASSY.			2
1			-3	FLANGE ASSY.			3
2			-4	FLANGE PL.,.12 NOM.THK.ø77 1/2" 6061-T6511	QQ-A-250/11		4
16			-5	RIB,ALUM. SQ STRL TBG 2"x2"x1/8" x 32"L. 6061-T6511	QQ-A-200/8		5
1			-6	CORE, ø12" STD. WT. SMLS. PIPE 6061-T6511	MIL-P-25995		6
2			-7	STIFFENER, FB .375 NOM. THK, x 2 1/2" 6061-T6511	QQ-A-200/8		7
2			-8	RIM, FB .25 NOM. THK x 2 1/2" 6061-T6511	QQ-A-200/8		8
2			-9	DISC. PL. 1" NOM. THK. ø12" 6061-T651	QQ-A-250/11		9
9			-10	INSERT, HLCL., HELICOIL 1191-9CN-0844	MS124701		10
1			-11	BUTTON,RND,BAR STK.ø1.50 NOM. x 1.50 L. 6061-T6	QQ-A-200/8		11
1			172314-1	STUB SHAFT			12

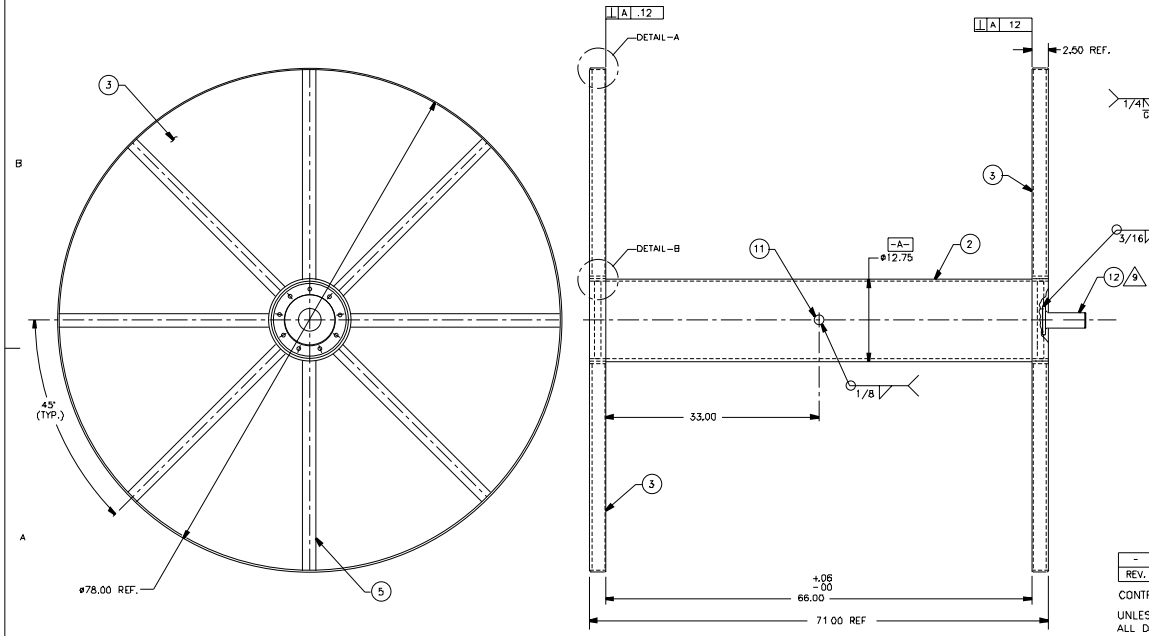

(2) REEL ASSY.

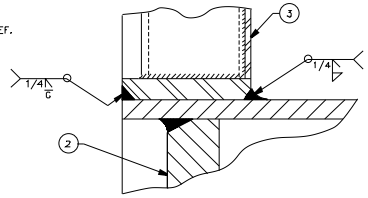

DETAIL-B
SCALE: FULL

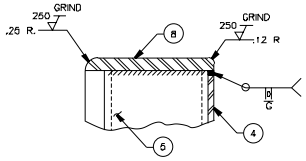

DETAIL-A
SCALE: FULL

REV.	DATE	APPR.	DESCRIPTION	BY
-	03/93	-	-	-

CONTRACT NUMBER DTCG23-92-C-EC1069

UNLESS OTHERWISE SPECIFIED:
ALL DIMENSIONS ARE IN INCHES.
TOLERANCES: FRACTIONS ±1/32 DECIMALS ±.01 ±.005 ANGLES ±1°

DICHROMA, INCORPORATED
ALEXANDRIA, VIRGINIA
(703) 921-1440

CONSULTANTS

U. S. COAST GUARD
CIVIL ENGINEERING
WASHINGTON, DC

USCG COMDT G-SEC-2
2100 2ND STREET SW
WASHINGTON, DC 20593-0001

ISSUE		
Q1	07/17/01	LV
MARK	DATE	DESCRIPTION

A/E PROJECT NO: 254
CAD FILE NAME: 2172312D01
DESIGNED BY: RMS
DRAWN BY: JD
EDITED BY:
CHECKED BY: RMS
SCALE: 1-1/2"=1'-0" PLOT SCALE:

SHEET TITLE
G-SEC-2C
WASHINGTON DC

REEL ASSEMBLY

REVIEWED BY | REVIEWED BY: | REVIEWED BY
PROJECT ENG. | BRANCH CHIEF | G-ECV-3D
CHIEF, CIVIL ENG | DATE

PROJECT NUMBER | DRAWING NUMBER
172312
DISCIPLINE/SHT NO 98-
SHEET 1 OF 2