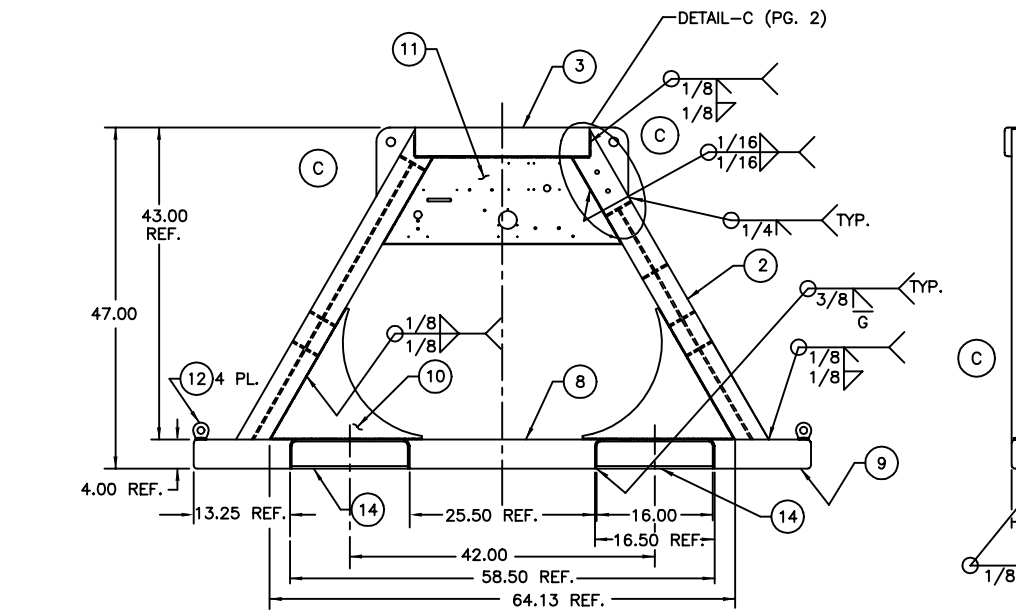

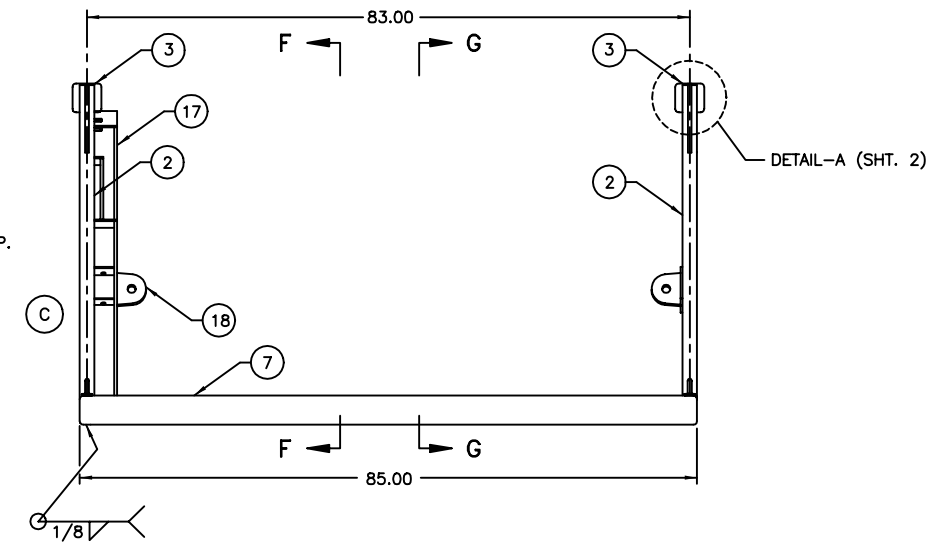

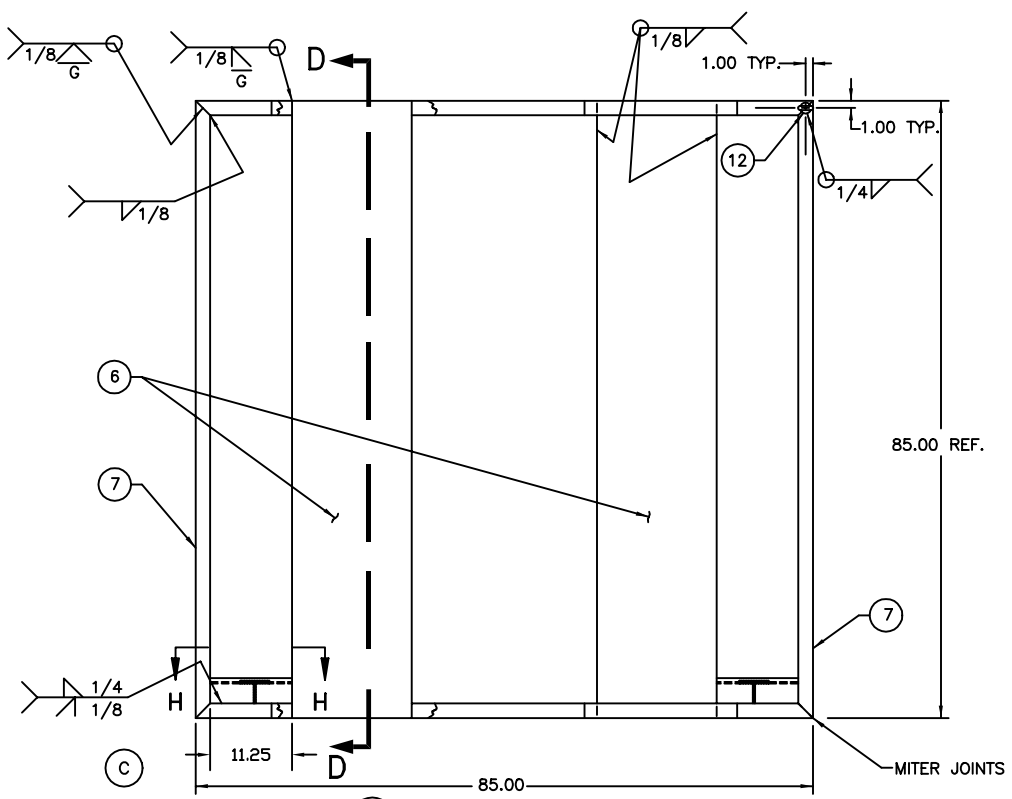

1 FRAME ASSY.

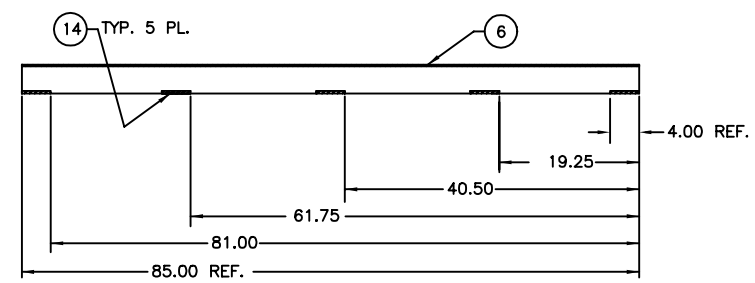

SECTION D-D (TYP. BOTH CHANNELS)

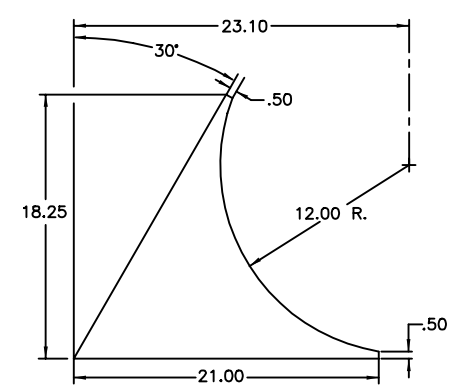

10 GUSSET

SCALE: 1 1/2"=1"

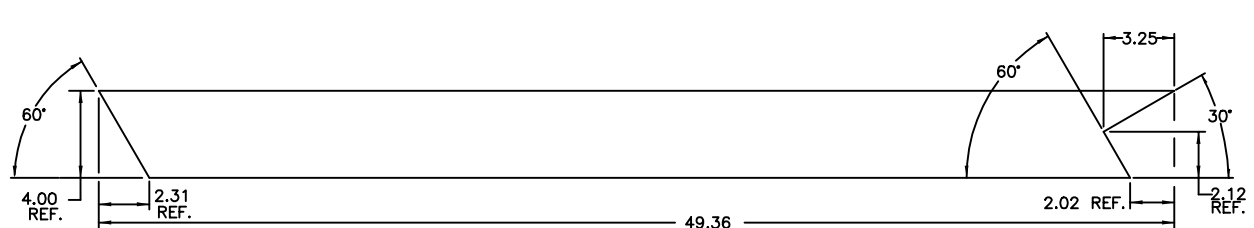

2 LEG

SCALE: 3"=1"

NOTES:

1. INTERPRET DRAWING PER MIL-STD-100E.
2. UNLESS OTHERWISE SPECIFIED:
   A. BREAK ALL SHARP EDGES: .005-.015R.
   B. GRIND ALL FLAME OR SAW CUT EDGES SMOOTH.
   C. MACHINE SURFACE FINISH 125 ▽
   D. ALL THREADED HOLES SHALL BE RE-TAPPED AFTER FINISH CURES.
3. MATERIALS: ALL MATERIALS SHALL BE OF NEW MANUFACTURE. STRUCTURAL STEEL SHALL COMPLY WITH THE PROVISIONS OF ASTM A36. STRUCTURAL TUBING SHALL BE ERW .250 NOM. THK. WALL PER ASTM A500, GR. B. MILL TEST CERTIF. REQUIRED FOR ALL MATERIALS INCLUDING WELDING FILLER METAL.
4. WELDING: SMAW PROCESS PER AWS D14.1. USING E7018 LOW-HYDROGEN ELECTRODES PER AWS A5.5 AND MIL-E-22200/1. REMOVE ALL FLUX AND SPLATTER. ALL JOINTS SHALL BE WIRE BRUSHED, CLEAN OF ALL SLAG, DE-GREASED AND DYE PENETRANT INSPECTED PER AWS D14.1.
5. ITEM 11, CONTROL PANEL, SHALL BE MACHINED BEFORE WELDING.
6. FABRICATE AND MACHINE ITEM 3, STRUT ASSEMBLY, BEFORE WELDING.
7. FINISH: MASK BOLT HOLES AND FINISH PER THE PROVISIONS OF OSI-SPEC-1000A.

PARTS LIST

	QTY REQD	CAGE CODE	SYM	PART OR IDENTIFYING NO	NOMENCLATURE OR DESCRIPTION	MATERIAL SPECIFICATION	ZONE	ITEM NO.
				-1	FRAME ASSY.			1
	4			-2	LEG RECT. STRL. TBG. 2"x4"x 1/4" x 49 3/8" L.	ASTM A500		2
	2			-3	STRUT ASSY.			3
	2			-4	STRUT SQ. STRL. TBG. 4"x4"x 1/4"x 24" L.	ASTM A500		4
	8			-5	SPACER, RND. BAR STK. ø1.00 NOM. x 4" L.	AISI 1018		5
	2			-6	CHANNEL, FABRICATED 1/4" NOM. PL. x 85" L.	ASTM A36		6
	2			-7	TUBE, BASE RECT. STRL. TBG. 2" x 4" x 1/4" x 85" L.	ASTM A500, GR. B		7
	2			-8	TUBE, BASE RECT. STRL. TBG. 2" x 4" x 1/4" x 25 1/2" L.	ASTM A500, GR. B		8
	4			-9	TUBE, BASE RECT. STRL. TBG. 2" x 4" x 1/4" x 13 1/4" L.	ASTM A500, GR. B		9
	4			-10	GUSSET PL. .25 NOM. THK. 21" x 18.25"	ASTM A36		10
	1			-11	CONTROL PANEL PL. .125 NOM. THK. 33 1/16" x 14 1/2"	ASTM A36		11
	4			-12	PAD EYE CROSBY S-264 NO. 4 STL. FORG.	AISI 1035		12
	4			-13	PLATE, CLOSURE PL. .25 NOM. 3 1/2" x 3 1/2"	ASTM A36		13
	10			-14	F.B., 3/8" NOM. x 4" W. x 16" L.	ASTM A36		14
	4			-15	LIFTING GUSSET PL. 3/4" NOM. THK. 5 1/2" x 9.53"	ASTM A36		15
	4			-16	PADEYE 1/2" NOM. THK 4" X 5"	ASTM A36		16
	1			-17	FRONT LEFT SUB-ASSY			17
	1			-18	FRONT RIGHT SUB-ASSY			18
	1			-19	TEE, WT 3 x 8 X 10" L.	ASTM A36		19
	1			-20	TEE, WT 3 x 8 x 28" L.	ASTM A36		20
	1			-21	TEE, WT 3 x 8 x 45" L.	ASTM A36		21
	2			-22	PL. 1/4 NOM. THK. 3.14" X 4"	ASTM A36		22
	1			-23	PL. 1/4 NOM. THK. 1 1/4" X 4"	ASTM A36		23
C	8			-24	PL. .25 NOM. THK. 2 3/4" X 1 3/4"	ASTM A36		24
	2			-25	PL. 1/4 NOM. THK. 5" X 4"	ASTM A36		25
C					ITEM DELETED			26
	2			-27	PL. 1/2 NOM. THK. 3 1/2" x 11 5/16"	ASTM A36		27
	2			-28	PL. 1/2 NOM. THK. 2 3/4" x 11 5/16"	ASTM A36		28
C	4			-29	TEE STIFFENER			29

REV.	DATE	APPR.	DESCRIPTION	BY
D	10/98		ADDED DRAIN HOLE IN ITEM 19 ON DETAIL 18.	
C	9/97		ADDED TEE STIFFENER (ITEM 29) REMOVED BASE PLATE FOR LIFTING PADEYE, ADDED DIM 11.25	
B	12/96		ADDED WELD SYMBOLS ON SHT 3	
A	9/96		ADDED ITEMS 15 - 28, SHEET 3, & SECTIONS F-H	

DESIGNED: RMS
DRAWN: JGD
TRACED:
CHECKED: RMS
REVIEWED BY:
CG PROJ. ENGINEER
REVIEWED BY:
G-ECV-3D
REVIEWED BY:

U.S. COAST GUARD HEADQUARTERS

CIVIL ENGINEERING

FRAME ASSY.

CONTRACT NUMBER DTCG23-92-C-E-C1069

APPROVED: DATE

CHIEF OF OCEAN ENGINEERING BRANCH

UNLESS OTHERWISE SPECIFIED:
ALL DIMENSIONS ARE IN INCHES.
TOLERANCES: FRACTIONS ±1/32 DECIMALS ±.01 ±.005 ANGLES ±1°

DRAWING NUMBER 172311 REV. D

SCALE: 1"=1' SHEET 1 OF 3