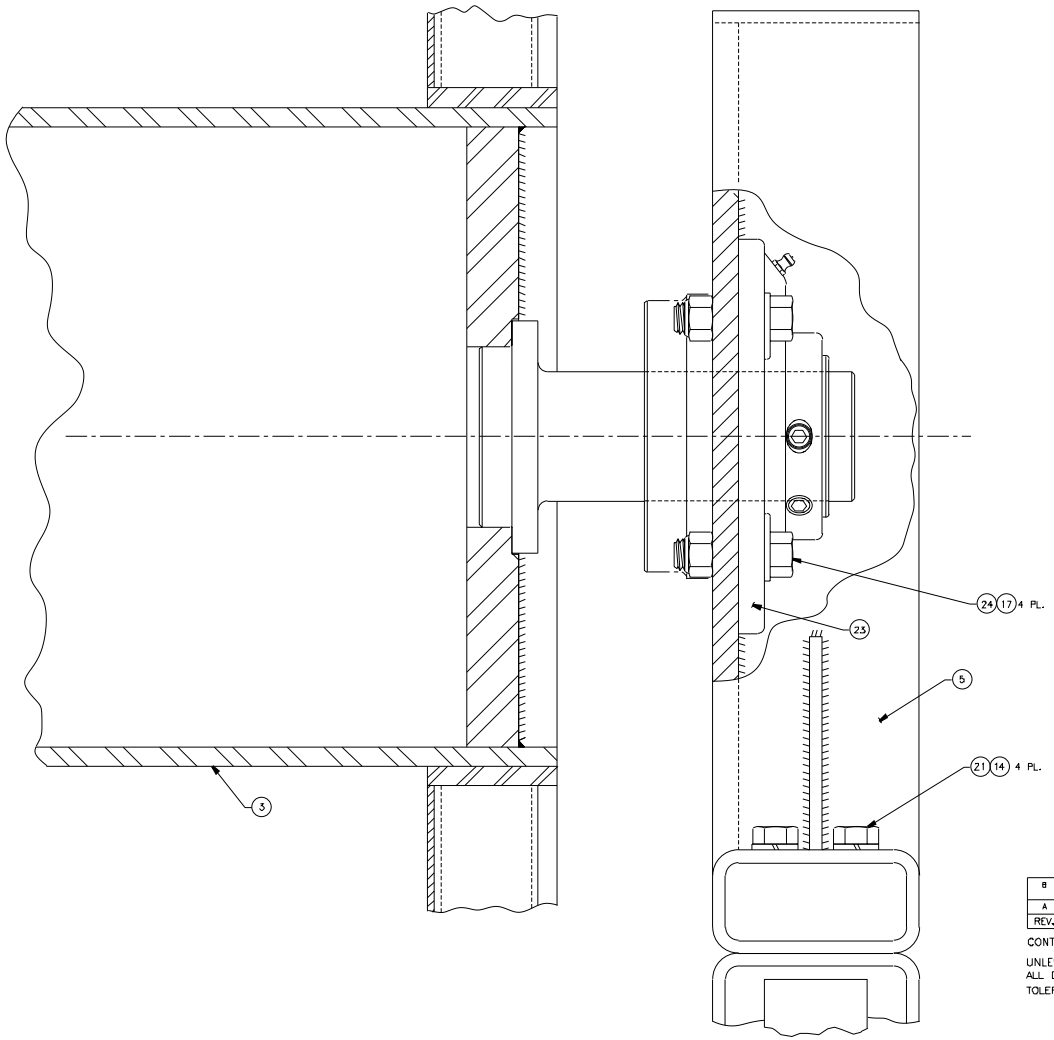

REV.	DATE	APPR.	DESCRIPTION	BY
B	-	-	MEPALT 060-B-REEL-ALL-03. INSTALL 8 TIE DOWN EYES ON REEL USED BY STRIKE TEAMS	-
A	05/23/95	-	MEPALT 0043-B-REEL-ALL-01. INSTALL GUARD ON REEL	-

CONTRACT NUMBER DTCG23-92-C-EC1069

UNLESS OTHERWISE SPECIFIED:
ALL DIMENSIONS ARE IN INCHES.

TOLERANCES:	FRACTIONS	DECIMALS	ANGLES
	±1/32	±.01	±1°
		±.005	

DICHROMA, INCORPORATED
ALEXANDRIA, VIRGINIA
(703) 821-1440

CONSULTANTS

U. S. COAST GUARD
CIVIL ENGINEERING
WASHINGTON, DC

USCG. COMDT G-SEC-2
2100 2ND STREET SW
WASHINGTON, DC 20593-0001

ISSUE

MARK	DATE	DESCRIPTION
01	07/17/01	LV

A/E PROJECT NO: 254
CAD FILE NAME: 2172310D03
DESIGNED BY: RWS
DRAWN BY: JD
EDITED BY:
CHECKED BY: RWS

SCALE FULL PLOT SCALE:

SHEET TITLE

G-SEC-2C
WASHINGTON DC

WINCH ASSEMBLY

REVIEWED BY:	REVIEWED BY:	REVIEWED BY
PROJECT ENG.	BRANCH CHIEF	G-ECV-3D

CHIEF, CIVIL ENG DATE

PROJECT NUMBER	DRAWING NUMBER
	172310
DISCIPLINE/SHT NO	
98-	SHEET 3 OF 5