NOTES:
1. INTERPRET DRAWING PER MIL-STD-100E.
2. ALL DIMENSIONS REFERENCE.
3. SEE SHEET 5 FOR PARTS LIST AND ASSEMBLY INSTRUCTIONS.
4. SOME FEATURES MAY BE OMITTED FOR DRAWING CLARITY.

PARTS LIST								
QTY REQD		CHGE CODE	SYM	PART OR IDENTIFYING NO	NOMENCLATURE OR DESCRIPTION	MATERIAL SPECIFICATION	ZONE	ITEM NO.

(SEE SEPARATE PARTS LIST)

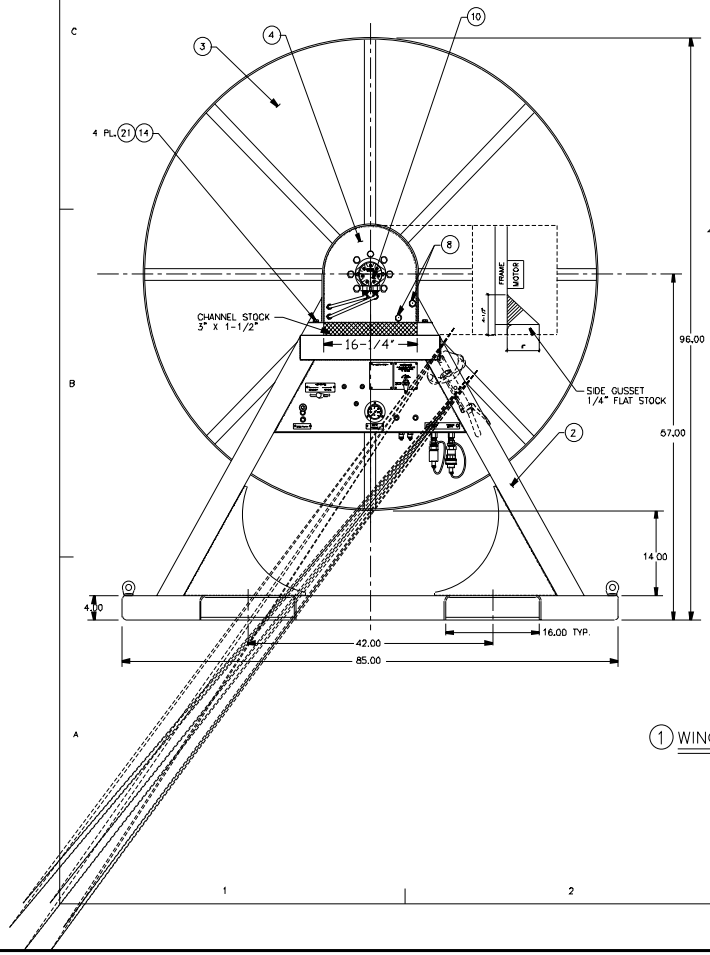

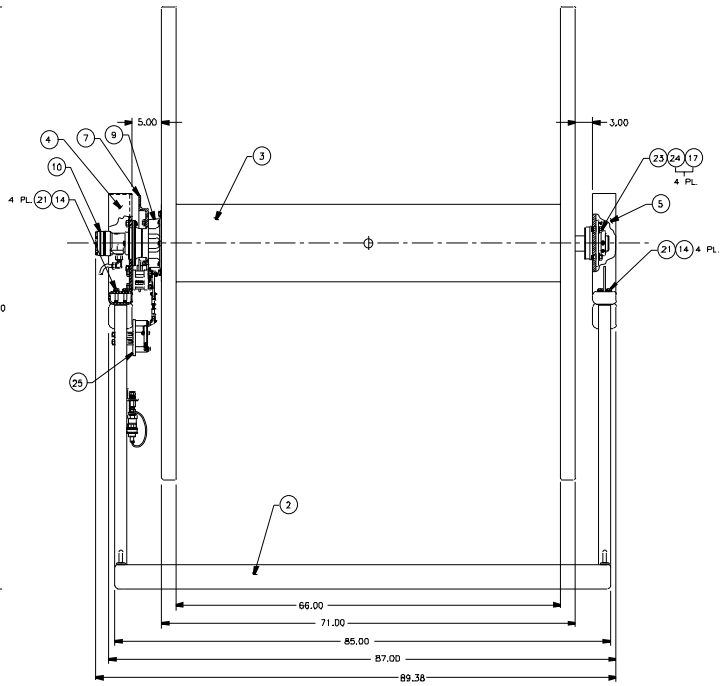

1 WINCH ASSEMBLY

REV.	DATE	APPR.	DESCRIPTION	BY
B	-	-	MEPALT 060-B-REEL-ALL-03. INSTALL B TIE DOWN EYES ON REEL USED BY STRIKE TEAMS	-
A	05/23/95	-	MEPALT 0043-B-REEL-ALL-01. INSTALL GUARD ON REEL	-

CONTRACT NUMBER DTCG23-92-C-EC1069

UNLESS OTHERWISE SPECIFIED:
ALL DIMENSIONS ARE IN INCHES.
TOLERANCES: FRACTIONS ±1/32 DECIMALS ±.01 ±.005 ANGLES ±1°

DICHROMA, INCORPORATED
ALEXANDRIA, VIRGINIA
(703) 821-1440

CONSULTANTS

U. S. COAST GUARD
CIVIL ENGINEERING
WASHINGTON, DC

USCG. COMDT G-SEC-2
2100 2ND STREET SW
WASHINGTON, DC 20593-0001

ISSUE		
01	07/17/01	LV
MARK	DATE	DESCRIPTION

A/E PROJECT NO: 254
CAD FILE NAME: Z172310D01
DESIGNED BY: RMS
DRAWN BY: JD
EDITED BY:
CHECKED BY: RMS

SCALE 1-1/2"=1'-0" PLOT SCALE:

SHEET TITLE
G-SEC-2C
WASHINGTON DC

WINCH ASSEMBLY

REVIEWED BY: REVIEWED BY: REVIEWED BY
PROJECT ENG. BRANCH CHIEF G-ECV-3D
CHIEF, CIVIL ENG DATE

PROJECT NUMBER DRAWING NUMBER
172310
DISCIPLINE/SHT NO 98-
SHEET 1 OF 5