NOTE:

1. APPLICABLE STANDARDS/SPECIFICATIONS:
   A. DOD- STD-00100D(AR)
   B. MILL-T-31000(I)

2. X SYMBOL MEANS AMOUNT OF TIMES OR PLACES USED.

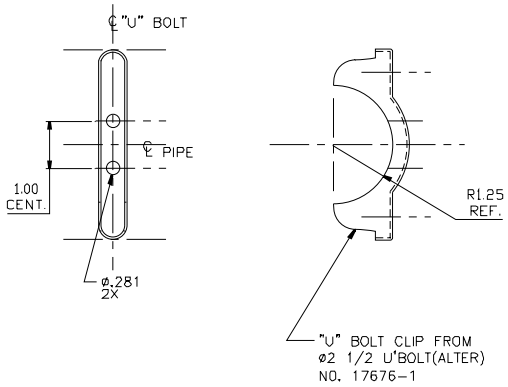

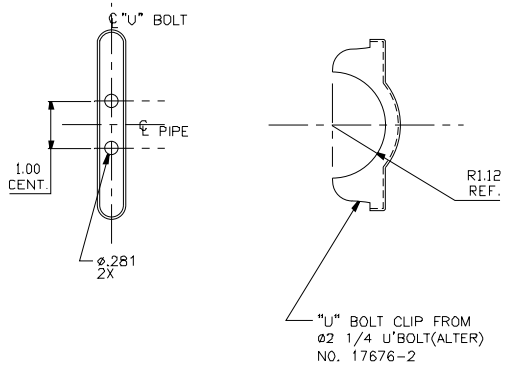

CONTRACT NO.DTCG23-91-C-EC1071

UNLESS OTHERWISE SPECIFIED:
ALL DIMENSIONS ARE IN INCHES.
TOLERANCES: DIM. XX±.03
ANG

DICHROMA, INCORPORATED
ALEXANDRIA, VIRGINIA
(703) 921-1440

CONSULTANTS

U. S. COAST GUARD
CIVIL ENGINEERING
WASHINGTON, DC

USCG. COMDT G-SEC-2
2100 2ND STREET SW
WASHINGTON, DC 20593-0001

ISSUE		
D1	07/17/01	LV
MARK	DATE	DESCRIPTION

A/E PROJECT NO 254
CAD FILE NAME Z17676D01
DESIGNED BY: M P C.
DRAWN BY JM
EDITED BY:
CHECKED BY:

SCALE 1" = 1'-0" PLOT SCALE

SHEET TITLE

G-SEC-2C
WASHINGTON DC

CLIPS,"U" BOLT

REVIEWED BY | REVIEWED BY: | REVIEWED BY:

PROJECT ENG. | BRANCH CHIEF | G-ECV-30

CHIEF, CIVIL ENG | DATE

PROJECT NUMBER	DRAWING NUMBER
	17676
DISCIPLINE/SHT NO	
98-	SHEET 1 OF 1